FOREWORD

This wiring diagram manual has been prepared to provide information on the electrical system of the LAND CRUISER / LAND CRUISER PRADO.

Applicable models: GRJ120, 125 Series
RZJ120, 125 Series
KDJ120, 125 Series
KZJ120 Series
LJ120, 125 Series

For service specifications and repair procedures of the above models other than those listed in this manual, refer to the following manuals;

Manual Name	Pub. No.
● LAND CRUISER / LAND CRUISER PRADO Chassis and Body Repair Manual Volume 1	RM990E1
Volume 2	RM990E2
Volume 3	RM990E3
● LAND CRUISER / LAND CRUISER PRADO Chassis and Body Repair Manual Supplement	RM1017E
● 1GR−FE Engine Repair Manual	RM1005E
● 3RZ−FE Engine Repair Manual	RM991E
● 1KD−FTV Engine Repair Manual	RM992E
● 1KZ−TE Engine Repair Manual	RM997E
● 5L−E Engine Repair Manual	RM993E
● LAND CRUISER / LAND CRUISER PRADO New Car Features	NCF233E
● LAND CRUISER / LAND CRUISER PRADO New Car Features Supplement	NCF236E

All information in this manual is based on the latest product information at the time of publication. However, specifications and procedures are subject to change without notice.

TOYOTA MOTOR CORPORATION

NOTICE

When handling supplemental restraint system components (removal, installation or inspection, etc.), always follow the direction given in the repair manuals listed above to prevent accidents and supplemental restraint system malfunction.

LAND CRUISER / LAND CRUISER PRADO ELECTRICAL WIRING DIAGRAM

	Section Code	Page
INTRODUCTION	A	2
HOW TO USE THIS MANUAL	B	3
TROUBLESHOOTING	C	12
ABBREVIATIONS	D	17
GLOSSARY OF TERMS AND SYMBOLS	E	18
RELAY LOCATIONS	F	20
ELECTRICAL WIRING ROUTING	G	38
SYSTEM CIRCUITS	H	126
GROUND POINT	I	728
POWER SOURCE (Current Flow Chart)	J	756
CONNECTOR LIST	K	770
PART NUMBER OF CONNECTORS	L	790
OVERALL ELECTRICAL WIRING DIAGRAM	M	798

©2002 TOYOTA MOTOR CORPORATION
All rights reserved. This book may not be reproduced or copied, in whole or in part, without the written permission of Toyota Motor Corporation.

A INTRODUCTION

This manual consists of the following 13 sections:

No.	Section	Description
A	INDEX	Index of the contents of this manual.
	INTRODUCTION	Brief explanation of each section.
B	HOW TO USE THIS MANUAL	Instructions on how to use this manual.
C	TROUBLE–SHOOTING	Describes the basic inspection procedures for electrical circuits.
D	ABBREVIATIONS	Defines the abbreviations used in this manual.
E	GLOSSARY OF TERMS AND SYMBOLS	Defines the symbols and functions of major parts.
F	RELAY LOCATIONS	Shows position of the Electronic Control Unit, Relays, Relay Block, etc. This section is closely related to the system circuit.
G	ELECTRICAL WIRING ROUTING	Describes position of Parts Connectors, Splice points, Ground points, etc. This section is closely related to the system circuit.
H	INDEX	Index of the system circuits.
	SYSTEM CIRCUITS	Electrical circuits of each system are shown from the power supply through ground points. Wiring connections and their positions are shown and classified by code according to the connection method. (Refer to the section, ”How to use this manual”). The ”System Outline” and ”Service Hints” useful for troubleshooting are also contained in this section.
I	GROUND POINT	Shows ground positions of all parts described in this manual.
J	POWER SOURCE (Current Flow Chart)	Describes power distribution from the power supply to various electrical loads.
K	CONNECTOR LIST	Describes the form of the connectors for the parts appeared in this book. This section is closely related to the system circuit.
L	PART NUMBER OF CONNECTORS	Indicates the part number of the connectors used in this manual.
M	OVERALL ELECTRICAL WIRING DIAGRAM	Provides circuit diagrams showing the circuit connections.

This manual provides information on the electrical circuits installed on vehicles by dividing them into a circuit for each system.

The actual wiring of each system circuit is shown from the point where the power source is received from the battery as far as each ground point. (All circuit diagrams are shown with the switches in the OFF position.)

When troubleshooting any problem, first understand the operation of the circuit where the problem was detected (see System Circuit section), the power source supplying power to that circuit (see Power Source section), and the ground points (see Ground Point section). See the System Outline to understand the circuit operation.

When the circuit operation is understood, begin troubleshooting of the problem circuit to isolate the cause. Use Relay Location and Electrical Wiring Routing sections to find each part, junction block and wiring harness connectors, wiring harness and wiring harness connectors, splice points, and ground points of each system circuit. Internal wiring for each junction block is also provided for better understanding of connection within a junction block.
Wiring related to each system is indicated in each system circuit by arrows (from__, to__). When overall connections are required, see the Overall Electrical Wiring Diagram at the end of this manual.

[A]

Stop Light

∗ The system shown here is an EXAMPLE ONLY. It is different to the actual circuit shown in the SYSTEM CIRCUITS SECTION.

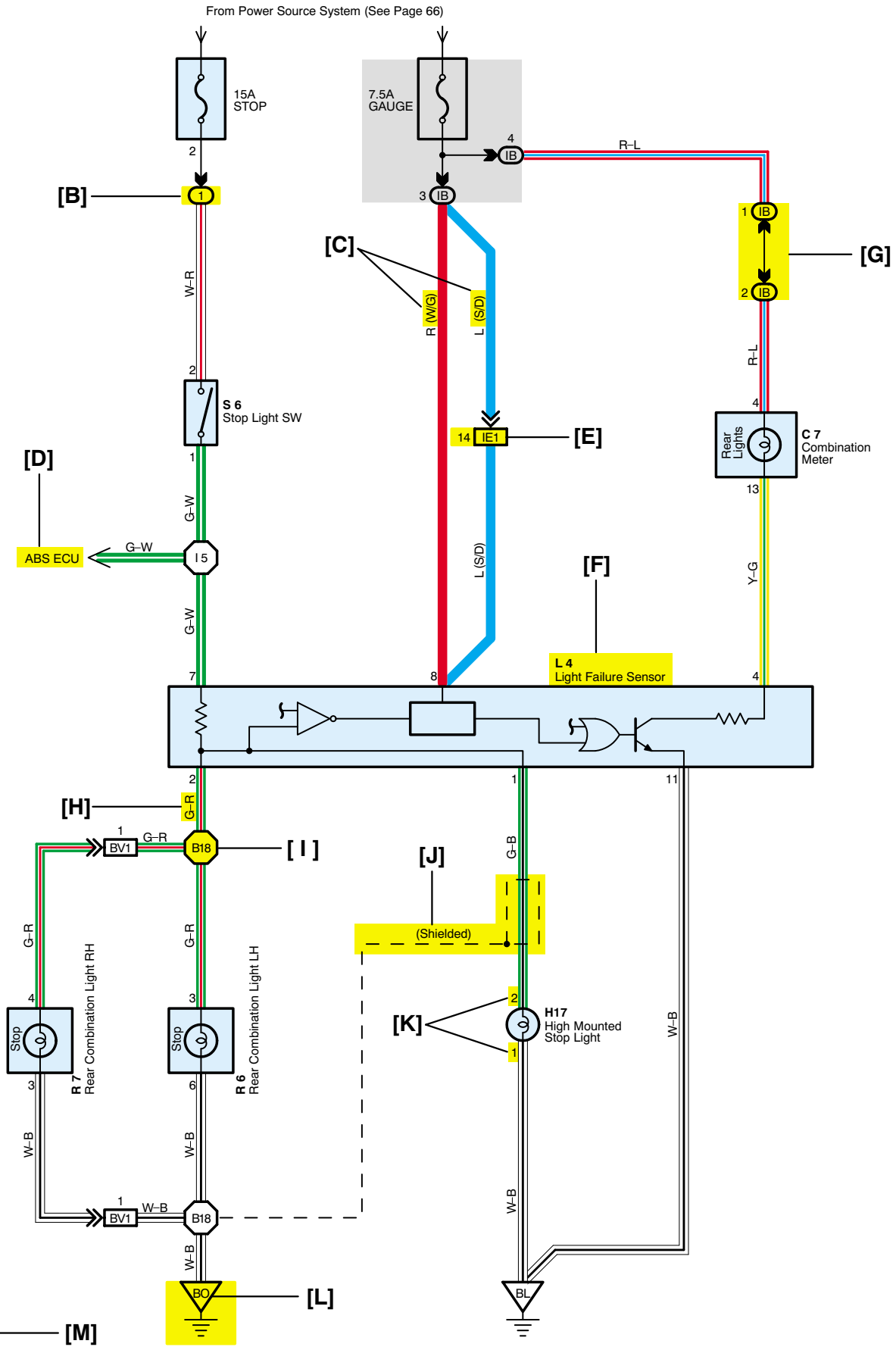

[A] : System Title

[B] : Indicates a Relay Block. No shading is used and only the Relay Block No. is shown to distinguish it from the J/B

Example: (1) Indicates Relay Block No.1

[C] : ( ) is used to indicate different wiring and connector, etc. when the vehicle model, engine type, or specification is different.

[D] : Indicates related system.

[E] : Indicates the wiring harness and wiring harness connector. The wiring harness with male terminal is shown with arrows (⩔).
Outside numerals are pin numbers.

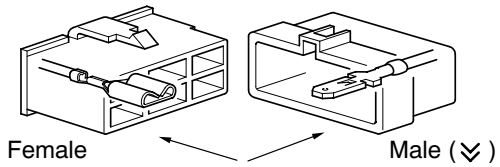

The first letter of the code for each wiring harness and wiring harness connector(s) indicates the component's location, e.g, "E" for the Engine Compartment, "I" for the Instrument Panel and Surrounding area, and "B" for the Body and Surrounding area.

When more than one code has the first and second letters in common, followed by numbers (e.g, IH1, IH2), this indicates the same type of wiring harness and wiring harness connector.

[F] : Represents a part (all parts are shown in sky blue). The code is the same as the code used in parts position.

[G] : Junction Block (The number in the circle is the J/B No. and the connector code is shown beside it). Junction Blocks are shaded to clearly separate them from other parts.

Example:

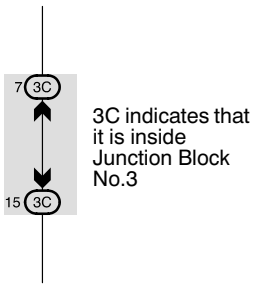

[H] : Indicates the wiring color.

Wire colors are indicated by an alphabetical code.

B = Black	W = White	BR = Brown
L = Blue	V = Violet	SB = Sky Blue
R = Red	G = Green	LG = Light Green
P = Pink	Y = Yellow	GR = Gray
O = Orange		

The first letter indicates the basic wire color and the second letter indicates the color of the stripe.

Example: L – Y

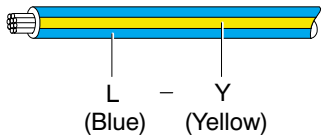

[I] : Indicates a wiring Splice Point (Codes are "E" for the Engine Room, "I" for the Instrument Panel, and "B" for the Body).

Example:

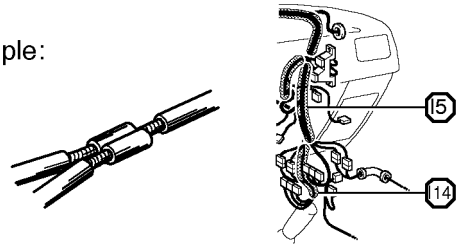

The Location of splice Point I 5 is indicated by the shaded section.

[J] : Indicates a shielded cable.

[K] : Indicates the pin number of the connector.
The numbering system is different for female and male connectors.

Example: Numbered in order from upper left to lower right / Numbered in order from upper right to lower left

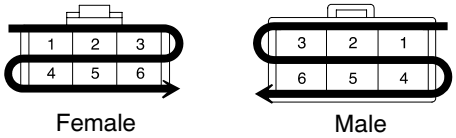

[L] : Indicates a ground point.

The first letter of the code for each ground point(s) indicates the component's location, e.g, "E" for the Engine Compartment, "I" for the Instrument Panel and Surrounding area, and "B" for the Body and Surrounding area.

[M] : Page No.

[N] **System Outline**

Current is applied at all times through the STOP fuse to TERMINAL 2 of the stop light SW.
When the ignition SW is turned on, current flows from the GAUGE fuse to TERMINAL 8 of the light failure sensor, and also flows through the rear lights warning light to TERMINAL 4 of the light failure sensor.

Stop Light Disconnection Warning

When the ignition SW is turned on and the brake pedal is pressed (Stop light SW on), if the stop light circuit is open, the current flowing from TERMINAL 7 of the light failure sensor to TERMINALS 1, 2 changes, so the light failure sensor detects the disconnection and the warning circuit of the light failure sensor is activated.
As a result, the current flows from TERMINAL 4 of the light failure sensor to TERMINAL 11 to GROUND and turns the rear lights warning light on. By pressing the brake pedal, the current flowing to TERMINAL 8 of the light failure sensor keeps the warning circuit on and holds the warning light on until the ignition SW is turned off.

[O] **Service Hints**

S6 Stop Light SW

2–1 : Closed with the brake pedal depressed

L4 Light Failure Sensor

1, 2, 7–Ground : Approx. 12 volts with the stop light SW on
4, 8–Ground : Approx. 12 volts with the ignition SW at ON position
11–Ground : Always continuity

[P] **: Parts Location**

Code	See Page	Code	See Page	Code	See Page
C7	34	L4	36	R7	37
H17	36	R6	37	S6	35

[Q] **: Relay Blocks**

Code	See Page	Relay Blocks (Relay Block Location)
1	18	R/B No.1 (Instrument Panel Brace LH)

[R] **: Junction Block and Wire Harness Connector**

Code	See Page	Junction Block and Wire Harness (Connector Location)
IB	20	Instrument Panel Wire and Instrument Panel J/B (Lower Finish Panel)
3C	22	Instrument Panel Wire and J/B No.3 (Instrument Panel Brace LH)

[S] **: Connector Joining Wire Harness and Wire Harness**

Code	See Page	Joining Wire Harness and Wire Harness (Connector Location)
IE1	42	Floor Wire and Instrument Panel Wire (Left Kick Panel)
BV1	50	Luggage Room Wire and Floor Wire (Luggage Room Left)

[T] **: Ground Points**

Code	See Page	Ground Points Location
BL	50	Under the Left Center Pillar
BO	50	Back Panel Center

[U] **: Splice Points**

Code	See Page	Wire Harness with Splice Points	Code	See Page	Wire Harness with Splice Points
I5	44	Cowl Wire	B18	50	Luggage Room Wire

[N] : Explains the system outline.

[O] : Indicates values or explains the function for reference during troubleshooting.

[P] : Indicates the reference page showing the position on the vehicle of the parts in the system circuit.

Example : Part ”L4” (Light Failure Sensor) is on page 36 of the manual.
∗ The letter in the code is from the first letter of the part, and the number indicates its order in parts starting with that letter.

Example : L 4
Parts is 4th in order
Light Failure Sensor

[Q] : Indicates the reference page showing the position on the vehicle of Relay Block Connectors in the system circuit.

Example : Connector ”1” is described on page 18 of this manual and is installed on the left side of the instrument panel.

[R] : Indicates the reference page showing the position on the vehicle of J/B and Wire Harness in the system circuit.

Example : Connector ”3C” connects the Instrument Panel Wire and J/B No.3. It is described on page 22 of this manual, and is installed on the instrument panel left side.

[S] : Indicates the reference page describing the wiring harness and wiring harness connector (the female wiring harness is shown first, followed by the male wiring harness).

Example : Connector ”IE1” connects the floor wire (female) and Instrument panel wire (male). It is described on page 42 of this manual, and is installed on the left side kick panel.

[T] : Indicates the reference page showing the position of the ground points on the vehicle.

Example : Ground point ”BO” is described on page 50 of this manual and is installed on the back panel center.

[U] : Indicates the reference page showing the position of the splice points on the vehicle.

Example : Splice point ”I5” is on the Cowl Wire Harness and is described on page 44 of this manual.

The ground points circuit diagram shows the connections from all major parts to the respective ground points. When troubleshooting a faulty ground point, checking the system circuits which use a common ground may help you identify the problem ground quickly. The relationship between ground points (EA, IB and IC shown below) can also be checked this way.

I GROUND POINT

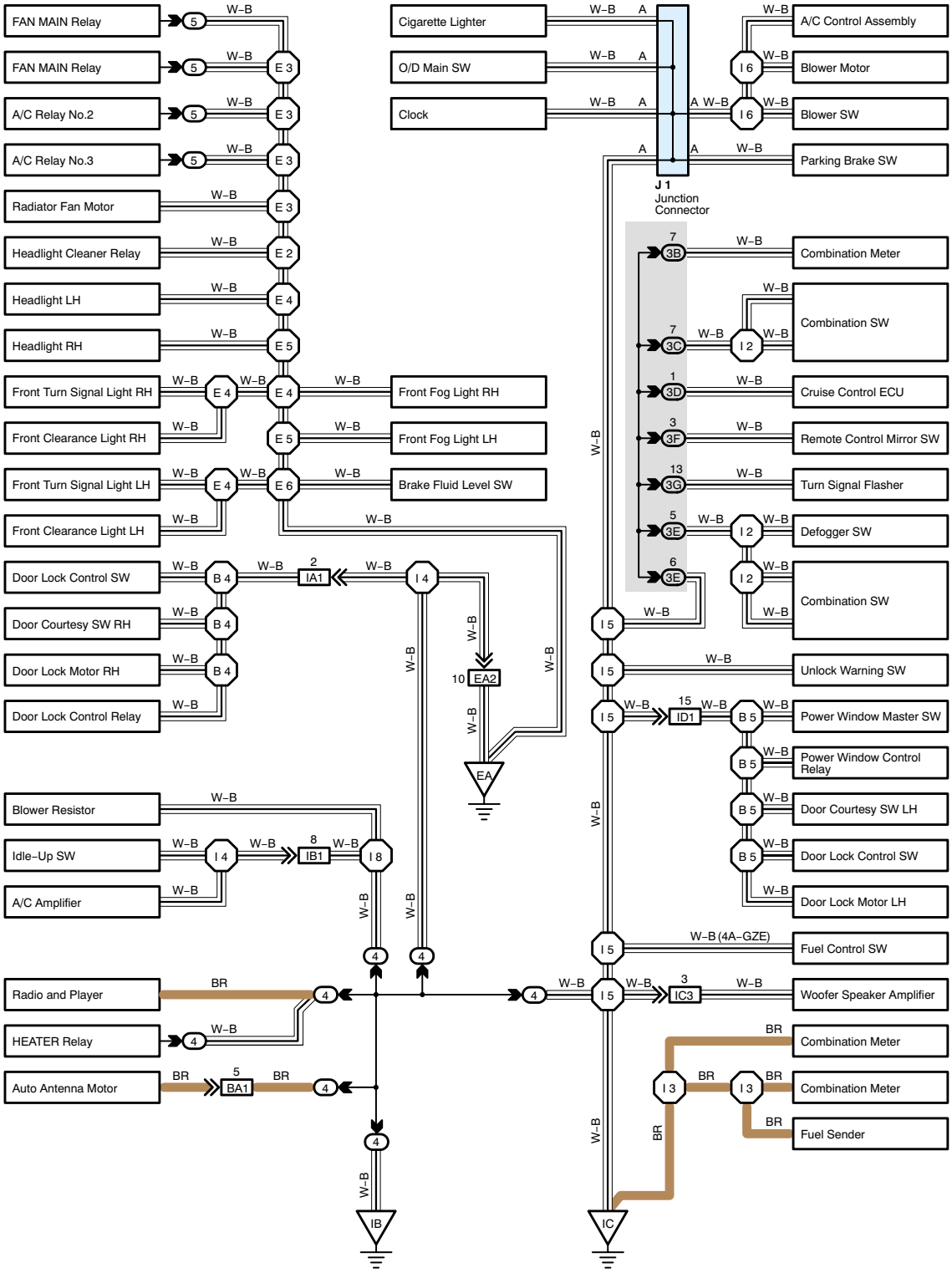

∗ The system shown here is an EXAMPLE ONLY. It is different to the actual circuit shown in the SYSTEM CIRCUITS SECTION.

The "Current Flow Chart" section, describes which parts each power source (fuses, fusible links, and circuit breakers) transmits current to. In the Power Source circuit diagram, the conditions when battery power is supplied to each system are explained. Since all System Circuit diagrams start from the power source, the power source system must be fully understood.

J POWER SOURCE (Current Flow Chart)

The chart below shows the route by which current flows from the battery to each electrical source (Fusible Link, Circuit Breaker, Fuse, etc.) and other parts.

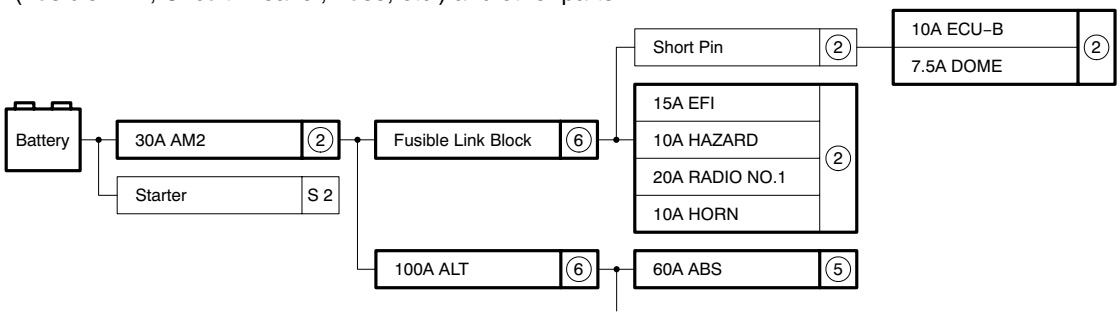

Engine Room R/B (See Page 20)

Fuse		System	Page
20A	STOP	ABS ABS and Traction Control Cruise Control Electronically Controlled Transmission Multiplex Communication System	194 187 180 166 210
10A	DOME	Cigarette Lighter Combination Meter Headlight Interior Light Key Reminder and Seat Belt Warning Light Auto Turn Off Theft Deterrent and Door Lock	214 230 112 122

Power Source

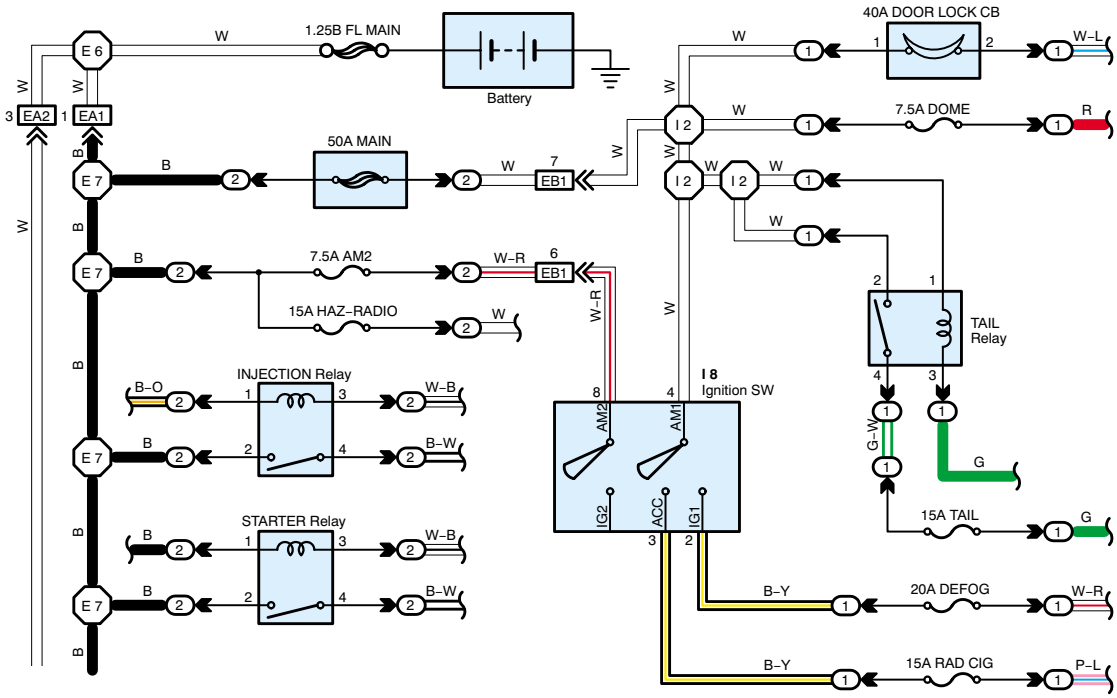

* The system shown here is an EXAMPLE ONLY. It is different to the actual circuit shown in the SYSTEM CIRCUITS SECTION.

K CONNECTOR LIST

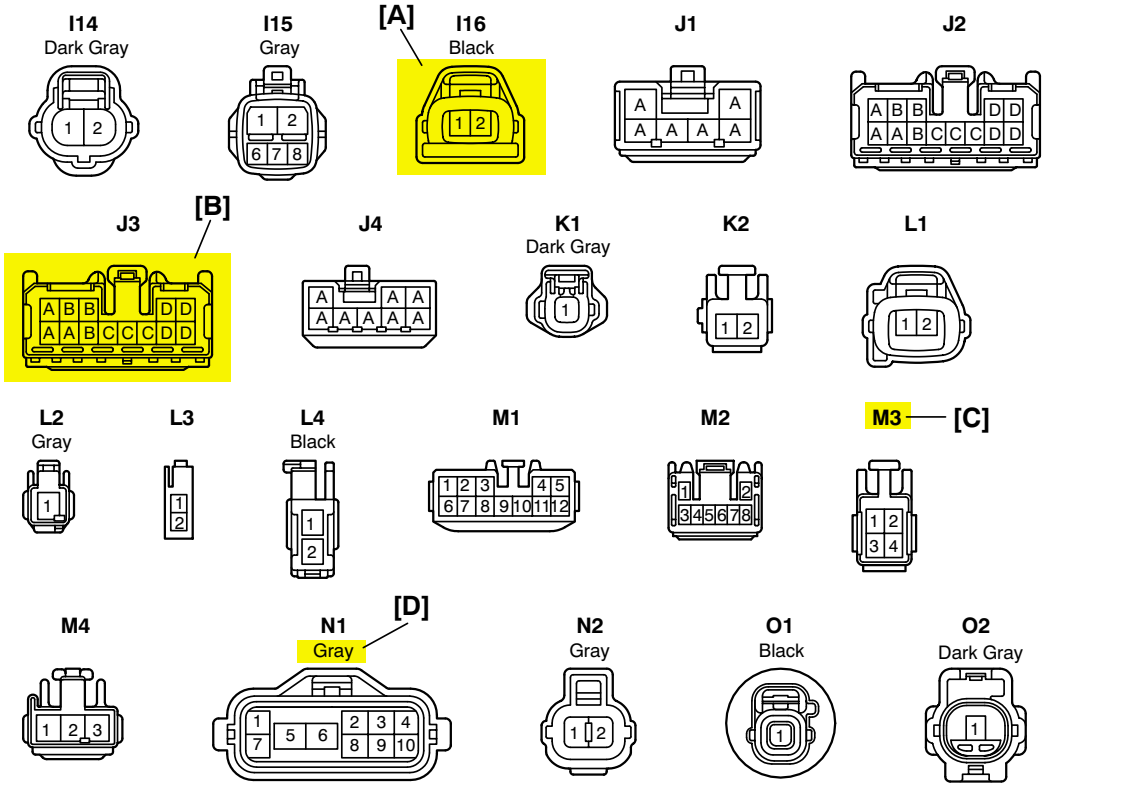

[A] : Indicates connector to be connected to a part. (The numeral indicates the pin No.)

[B] : Junction Connector
Indicates a connector which is connected to a short terminal.

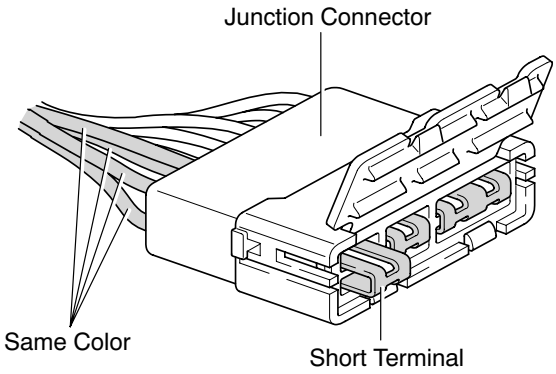

Junction connector in this manual include a short terminal which is connected to a number of wire harnesses. Always perform inspection with the short terminal installed. (When installing the wire harnesses, the harnesses can be connected to any position within the short terminal grouping. Accordingly, in other vehicles, the same position in the short terminal may be connected to a wire harness from a different part.)
Wire harness sharing the same short terminal grouping have the same color.

[C] : Parts Code
The first letter of the code is taken from the first letter of part, and the numbers indicates its order in parts which start with the same letter.

[D] : Connector Color
Connectors not indicated are milky white in color.

L PART NUMBER OF CONNECTORS

Code	Part Name	Part Number	Code	Part Name	Part Number
A 1	A/C Ambient Temp. Sensor	90980–11070	D 4	Diode (Courtesy)	90980–11608
A 2	A/C Condenser Fan Motor	90980–11237	D 5	Diode (Interior Light)	90980–10962
A 3	A/C Condenser Fan Relay	90980–10940	D 6	Diode (Moon Roof)	90980–11608
A 4	A/C Condenser Fan Resistor	90980–10928	D 7	Door Lock Control Relay	90980–10848
A 5	A/C Magnetic Clutch	90980–11271	D 8	Door Lock Control SW LH	90980–11148
A 6	A/T Oil Temp. Sensor	90980–11413	D 9	Door Lock Control SW RH	
[A]	ABS Actuat [B]	909 [C] 151	D10	Door Courtesy SW LH	90980–11097
A 8	ABS Actuator	90980–11009	D11	Door Courtesy SW RH	
A 9	ABS Speed Sensor Front LH	90980–10941	D12	Door Courtesy SW Front LH	90980–11156
A10	ABS Speed Sensor Front RH	90980–11002	D13	Door Courtesy SW Front RH	
A11	Airbag Sensor Front LH	90980–11856	D14	Door Courtesy SW Rear LH	
A12	Airbag Sensor Front RH		D15	Door Courtesy SW Rear RH	
A13	[illegible]	90980–11194	D16	[illegible] and Unlock SW LH	90980–11170
		90980–11[illegible]		[illegible] RH	

[A] : Part Code

[B] : Part Name

[C] : Part Number
Toyota Part Number are indicated.

Not all of the above part numbers of the connector are established for the supply.

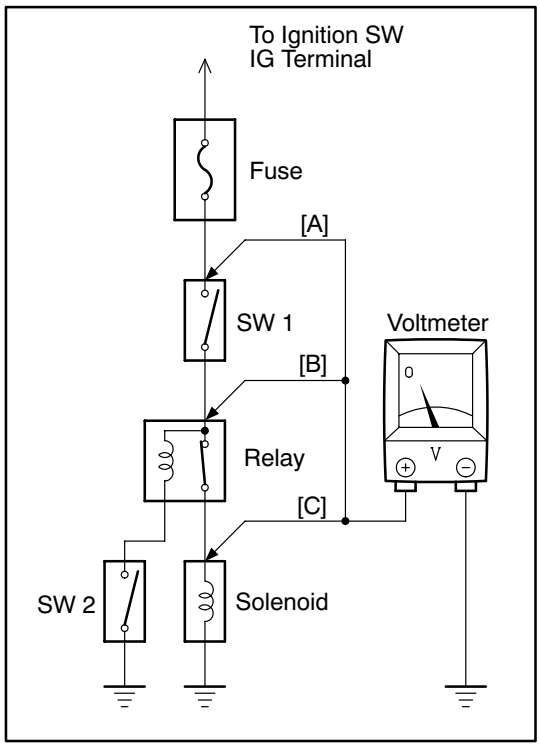

VOLTAGE CHECK

(a) Establish conditions in which voltage is present at the check point.

Example:
[A] – Ignition SW on
[B] – Ignition SW and SW 1 on
[C] – Ignition SW, SW 1 and Relay on (SW 2 off)

(b) Using a voltmeter, connect the negative lead to a good ground point or negative battery terminal, and the positive lead to the connector or component terminal.
This check can be done with a test light instead of a voltmeter.

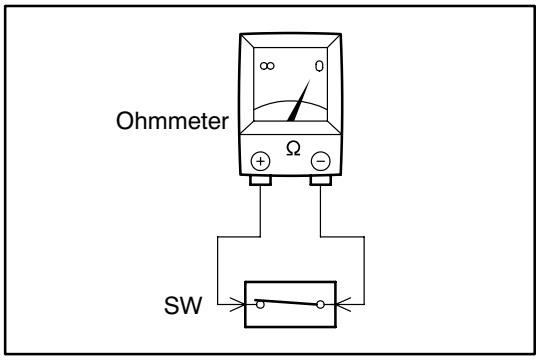

CONTINUITY AND RESISTANCE CHECK

(a) Disconnect the battery terminal or wire so there is no voltage between the check points.

(b) Contact the two leads of an ohmmeter to each of the check points.

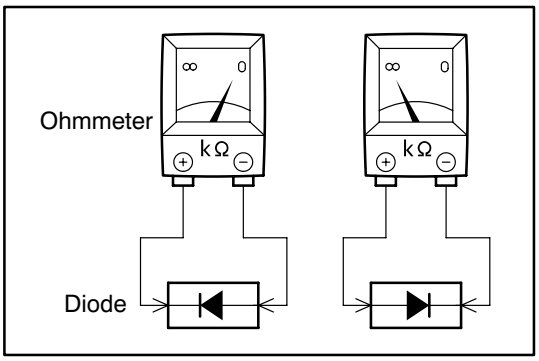

If the circuit has diodes, reverse the two leads and check again.
When contacting the negative lead to the diode positive side and the positive lead to the negative side, there should be continuity.
When contacting the two leads in reverse, there should be no continuity.

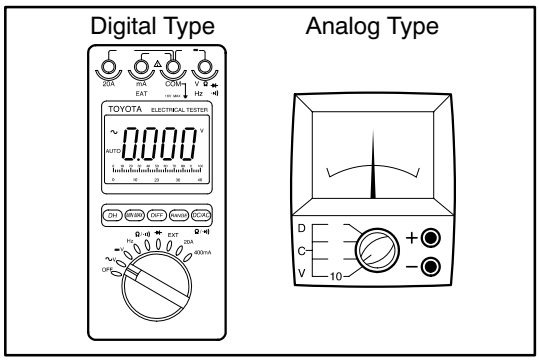

(c) Use a volt/ohmmeter with high impedance (10 kΩ/V minimum) for troubleshooting of the electrical circuit.

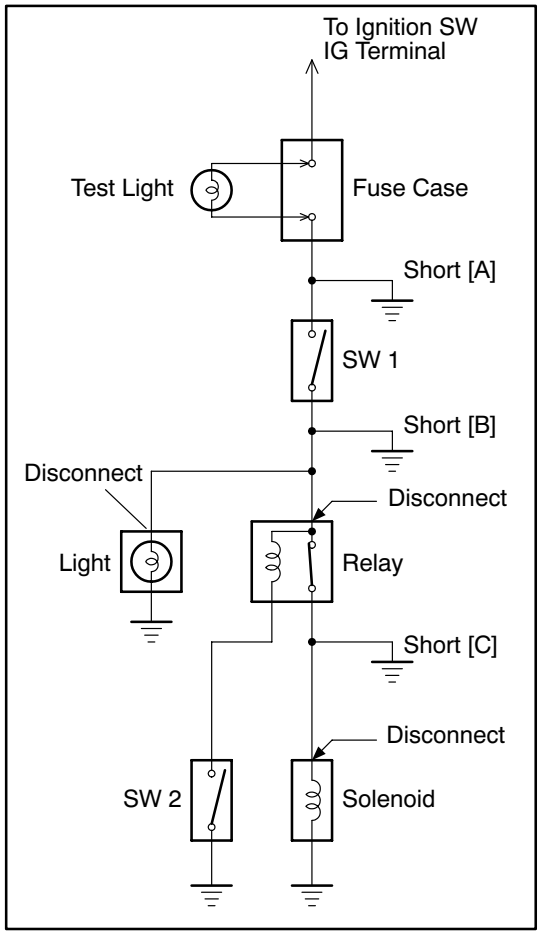

FINDING A SHORT CIRCUIT

(a) Remove the blown fuse and disconnect all loads of the fuse.

(b) Connect a test light in place of the fuse.

(c) Establish conditions in which the test light comes on.

Example:
[A] – Ignition SW on
[B] – Ignition SW and SW 1 on
[C] – Ignition SW, SW 1 and Relay on (Connect the Relay) and SW 2 off (or Disconnect SW 2)

(d) Disconnect and reconnect the connectors while watching the test light.
The short lies between the connector where the test light stays lit and the connector where the light goes out.

(e) Find the exact location of the short by lightly shaking the problem wire along the body.

CAUTION:

(a) Do not open the cover or the case of the ECU unless absolutely necessary. (If the IC terminals are touched, the IC may be destroyed by static electricity.)

(b) When replacing the internal mechanism (ECU part) of the digital meter, be careful that no part of your body or clothing comes in contact with the terminals of leads from the IC, etc. of the replacement part (spare part).

DISCONNECTION OF MALE AND FEMALE CONNECTORS

To pull apart the connectors, pull on the connector itself, not the wire harness.

HINT : Check to see what kind of connector you are disconnecting before pulling apart.

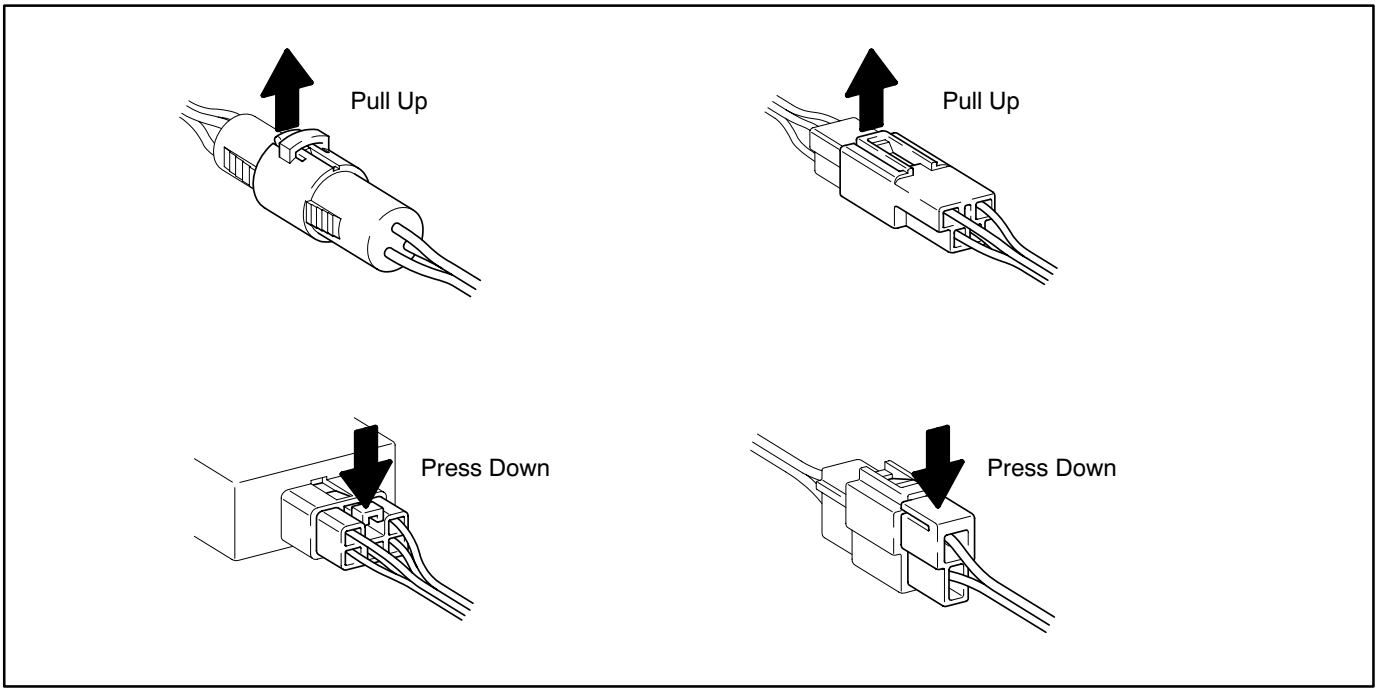

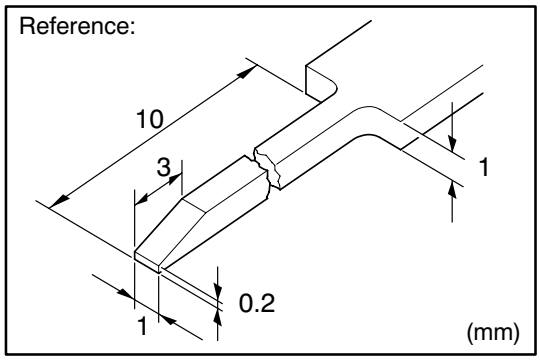

HOW TO REPLACE TERMINAL (with terminal retainer or secondary locking device)

1. PREPARE THE SPECIAL TOOL

   HINT : To remove the terminal from the connector, please construct and use the special tool or like object shown on the left.

2. DISCONNECT CONNECTOR

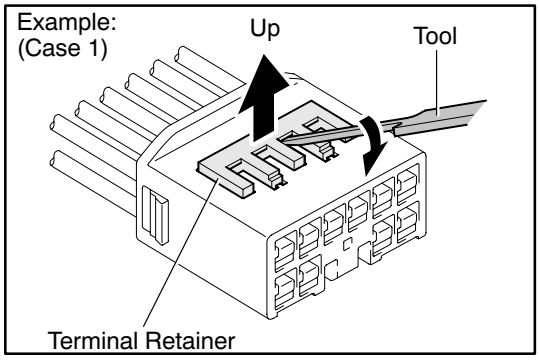

3. DISENGAGE THE SECONDARY LOCKING DEVICE OR TERMINAL RETAINER.

   (a) Locking device must be disengaged before the terminal locking clip can be released and the terminal removed from the connector.

   (b) Use a special tool or the terminal pick to unlock the secondary locking device or terminal retainer.

   NOTICE:
   Do not remove the terminal retainer from connector body.

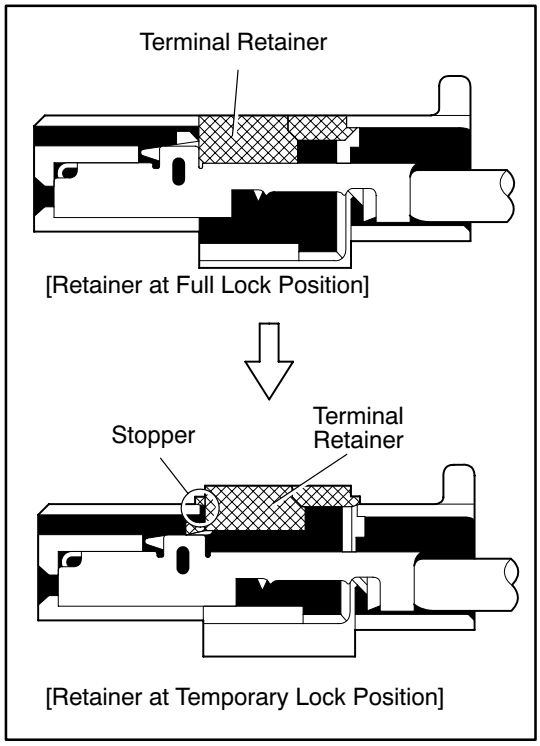

[A] For Non−Waterproof Type Connector

HINT : The needle insertion position varies according to the connector's shape (number of terminals etc.), so check the position before inserting it.

"Case 1"

Raise the terminal retainer up to the temporary lock position.

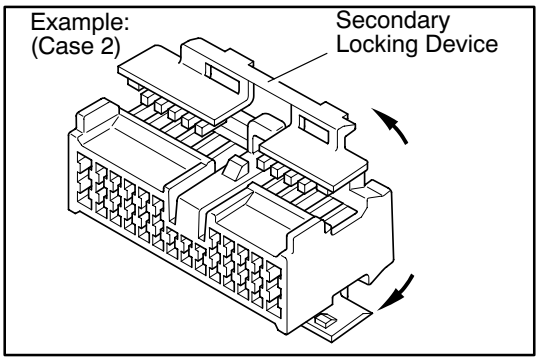

"Case 2"

Open the secondary locking device.

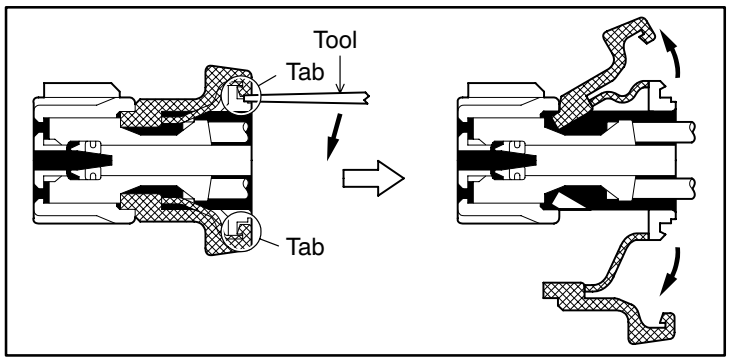

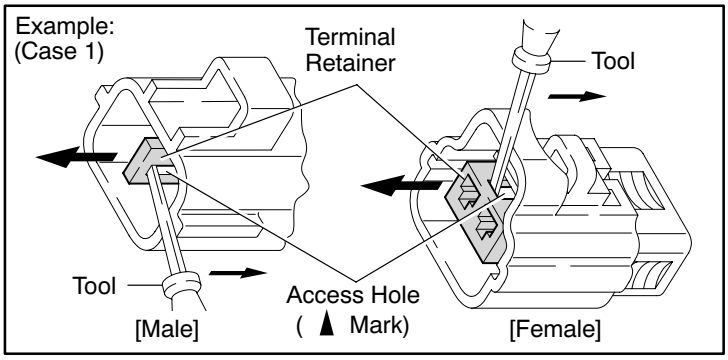

[B] For Waterproof Type Connector

HINT : Terminal retainer color is different according to connector body.

Example:

Terminal Retainer	: Connector Body
Black or White	: Gray
Black or White	: Dark Gray
Gray or White	: Black

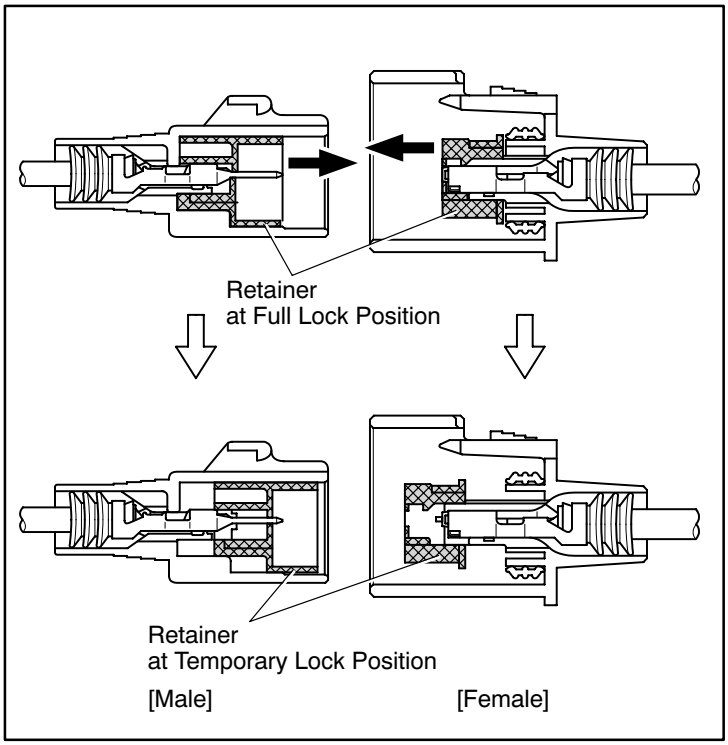

”Case 1”

Type where terminal retainer is pulled up to the temporary lock position (Pull Type).

Insert the special tool into the terminal retainer access hole (▲Mark) and pull the terminal retainer up to the temporary lock position.

HINT : The needle insertion position varies according to the connector’s shape (Number of terminals etc.), so check the position before inserting it.

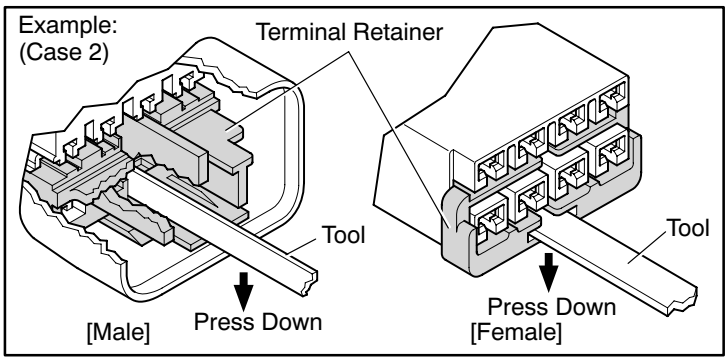

”Case 2”

Type which cannot be pulled as far as Power Lock insert the tool straight into the access hole of terminal retainer as shown.

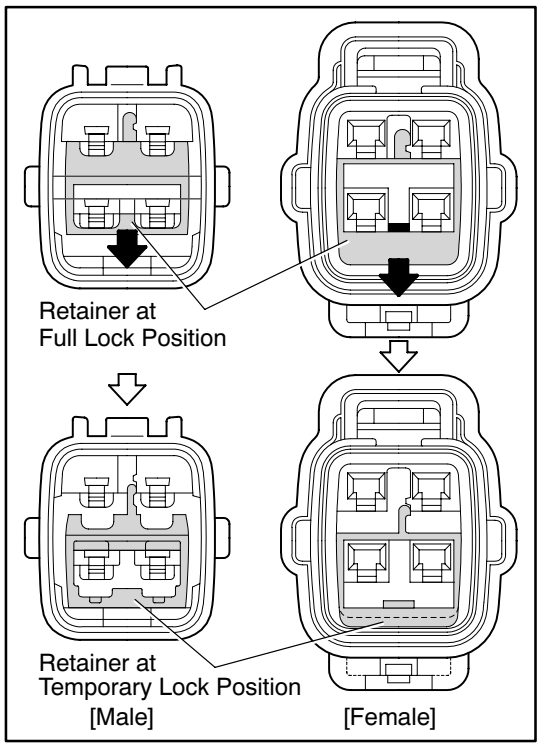

Push the terminal retainer down to the temporary lock position.

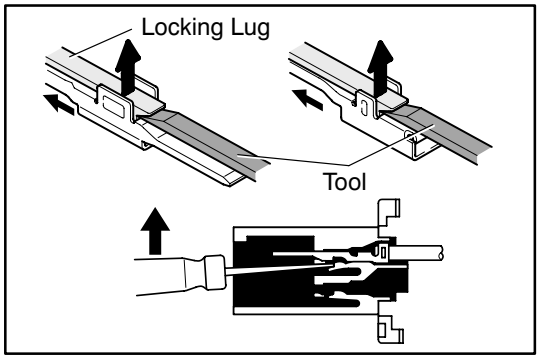

(c) Release the locking lug from terminal and pull the terminal out from rear.

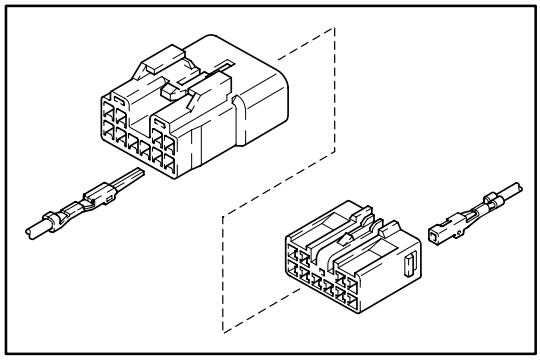

4. INSTALL TERMINAL TO CONNECTOR

(a) Insert the terminal.

HINT:
1. Make sure the terminal is positioned correctly.
2. Insert the terminal until the locking lug locks firmly.
3. Insert the terminal with terminal retainer in the temporary lock position.

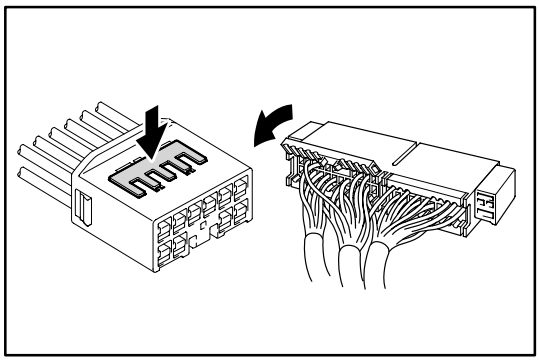

(b) Push the secondary locking device or terminal retainer in to the full lock position.

5. CONNECT CONNECTOR

ABBREVIATIONS

The following abbreviations are used in this manual.

4WD	=	Four Wheel Drive Vehicles
A/C	=	Air Conditioner
A/T	=	Automatic Transmission
ABS	=	Anti−Lock Brake System
BA	=	Brake Assist
CD	=	Compact Disc
COMB.	=	Combination
DIFF.	=	Differential
DLC3	=	Data Link Connector 3
ECT	=	Electronic Control Transmission
ECU	=	Electronic Control Unit
EFI	=	Electronic Fuel Injection
EGR	=	Exhaust Gas Recirculation
EVAP	=	Evaporative Emission
ISC	=	Idle Speed Control
J/B	=	Junction Block
LH	=	Left−Hand
LHD	=	Left−Hand Drive
M/T	=	Manual Transmission
MPX	=	Multiplex
PTC	=	Positive Temperature Coefficient
R/B	=	Relay Block
RH	=	Right−Hand
RHD	=	Right−Hand Drive
SW	=	Switch
TEMP.	=	Temperature
TRC	=	Traction Control
VRV	=	Vacuum Regulating Valve
VSC	=	Vehicle Stability Control
VSV	=	Vacuum Switching Valve
VVT	=	Variable Valve Timing
w/	=	With
w/o	=	Without

∗ The titles given inside the components are the names of the terminals (terminal codes) and are not treated as being abbreviations.

E GLOSSARY OF TERMS AND SYMBOLS

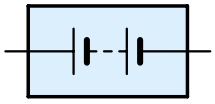

BATTERY
Stores chemical energy and converts it into electrical energy. Provides DC current for the auto's various electrical circuits.

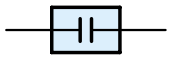

CAPACITOR (Condenser)
A small holding unit for temporary storage of electrical voltage.

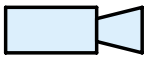

CIGARETTE LIGHTER
An electric resistance heating element.

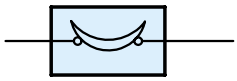

CIRCUIT BREAKER
Basically a reusable fuse, a circuit breaker will heat and open if too much current flows through it. Some units automatically reset when cool, others must be manually reset.

DIODE
A semiconductor which allows current flow in only one direction.

DIODE, ZENER
A diode which allows current flow in one direction but blocks reverse flow only up to a specific voltage. Above that potential, it passes the excess voltage. This acts as a simple voltage regulator.

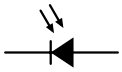

PHOTODIODE
The photodiode is a semiconductor which controls the current flow according to the amount of light.

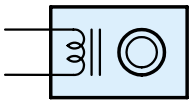

DISTRIBUTOR, IIA
Channels high-voltage current from the ignition coil to the individual spark plugs.

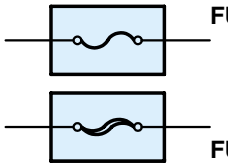

(for Medium Current Fuse)

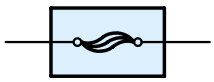

(for High Current Fuse or Fusible Link)

FUSE
A thin metal strip which burns through when too much current flows through it, thereby stopping current flow and protecting a circuit from damage.

FUSIBLE LINK
A heavy-gauge wire placed in high amperage circuits which burns through on overloads, thereby protecting the circuit. The numbers indicate the crosssection surface area of the wires.

GROUND
The point at which wiring attaches to the Body, thereby providing a return path for an electrical circuit; without a ground, current cannot flow.

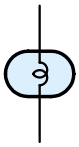

1. SINGLE FILAMENT

2. DOUBLE FILAMENT

HEADLIGHTS
Current flow causes a headlight filament to heat up and emit light. A headlight may have either a single (1) filament or a double (2) filament

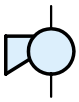

HORN
An electric device which sounds a loud audible signal.

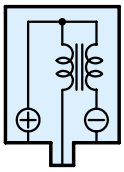

IGNITION COIL
Converts low-voltage DC current into high-voltage ignition current for firing the spark plugs.

LIGHT
Current flow through a filament causes the filament to heat up and emit light.

LED (LIGHT EMITTING DIODE)
Upon current flow, these diodes emit light without producing the heat of a comparable light.

METER, ANALOG
Current flow activates a magnetic coil which causes a needle to move, thereby providing a relative display against a background calibration.

METER, DIGITAL
Current flow activates one or many LED's, LCD's, or fluorescent displays, which provide a relative or digital display.

MOTOR
A power unit which converts electrical energy into mechanical energy, especially rotary motion.

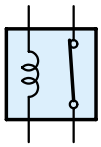

RELAY

1. NORMALLY CLOSED

Basically, an electrically operated switch which may be normally closed (1) or open (2).
Current flow through a small coil creates a magnetic field which either opens or closes an attached switch.

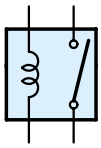

2. NORMALLY OPEN

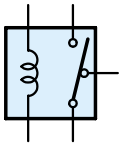

RELAY, DOUBLE THROW

A relay which passes current through one set of contacts or the other.

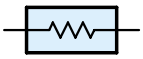

RESISTOR

An electrical component with a fixed resistance, placed in a circuit to reduce voltage to a specific value.

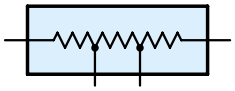

RESISTOR, TAPPED

A resistor which supplies two or more different non adjustable resistance values.

RESISTOR, VARIABLE or RHEOSTAT

A controllable resistor with a variable rate of resistance.
Also called a potentiometer or rheostat.

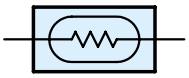

SENSOR (Thermistor)

A resistor which varies its resistance with temperature.

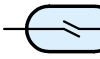

(Reed Switch Type)

SENSOR, SPEED

Uses magnetic impulses to open and close a switch to create a signal for activation of other components.

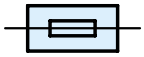

SHORT PIN

Used to provide an unbroken connection within a junction block.

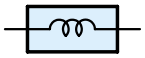

SOLENOID

An electromagnetic coil which forms a magnetic field when current flows, to move a plunger, etc.

SPEAKER

An electromechanical device which creates sound waves from current flow.

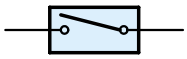

1. NORMALLY OPEN

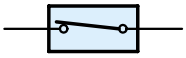

2. NORMALLY CLOSED

SWITCH, MANUAL

Opens and closes circuits, thereby stopping (1) or allowing (2) current flow.

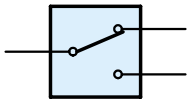

SWITCH, DOUBLE THROW

A switch which continuously passes current through one set of contacts or the other.

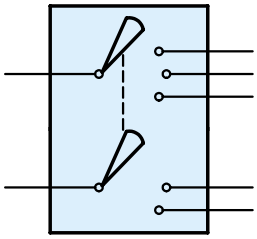

SWITCH, IGNITION

A key operated switch with several positions which allows various circuits, particularly the primary ignition circuit, to become operational.

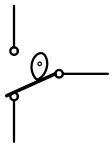

SWITCH, WIPER PARK

Automatically returns wipers to the stop position when the wiper switch is turned off.

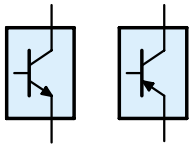

TRANSISTOR

A solidstate device typically used as an electronic relay; stops or passes current depending on the voltage applied at ”base”.

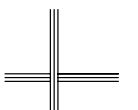

WIRES

(1) NOT CONNECTED

Wires are always drawn as straight lines on wiring diagrams.
Crossed wires (1) without a black dot at the junction are not joined;
crossed wires (2) with a black dot or octagonal (⬡) mark at the junction are spliced (joined) connections.

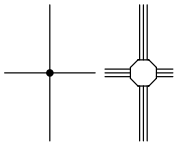

(2) SPLICED

[Engine Compartment]

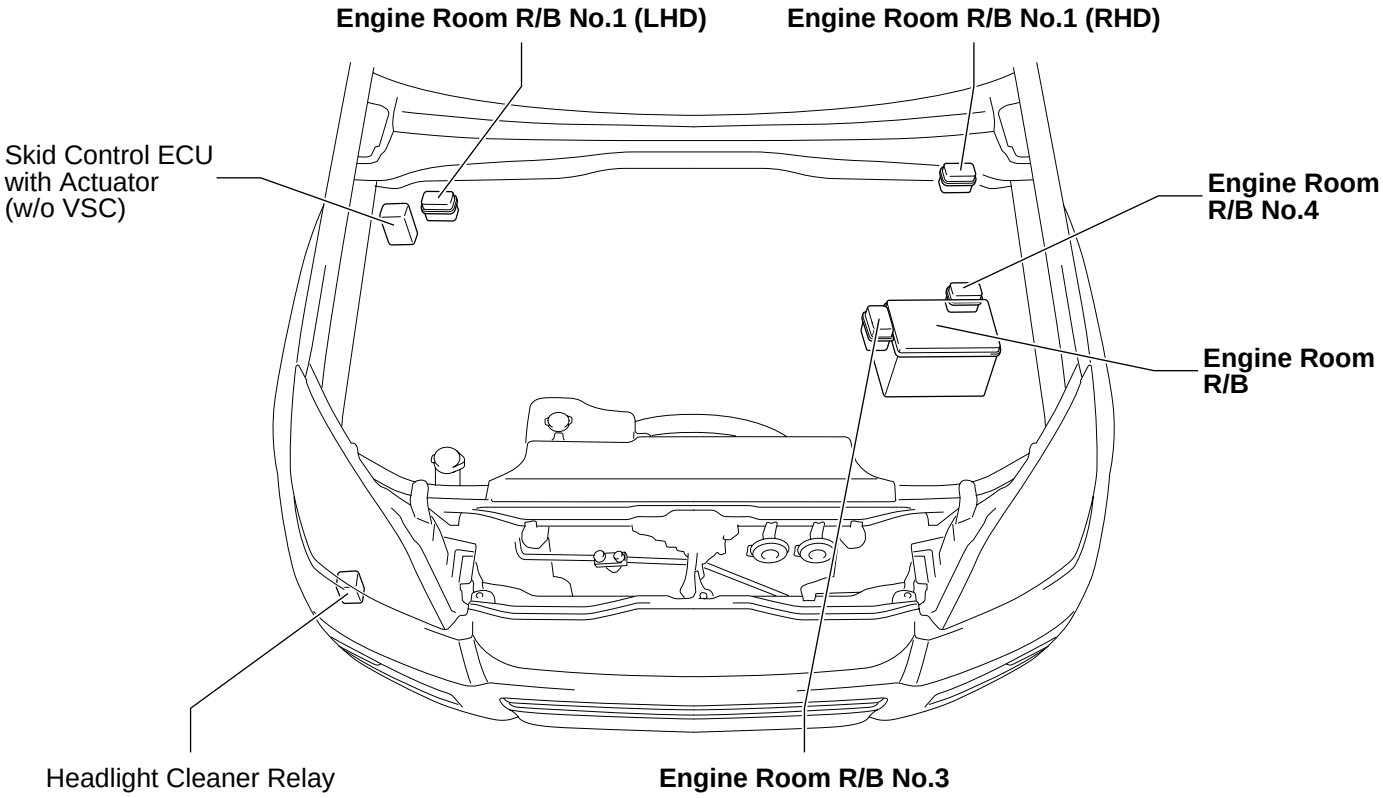

[Instrument Panel]
(LHD)

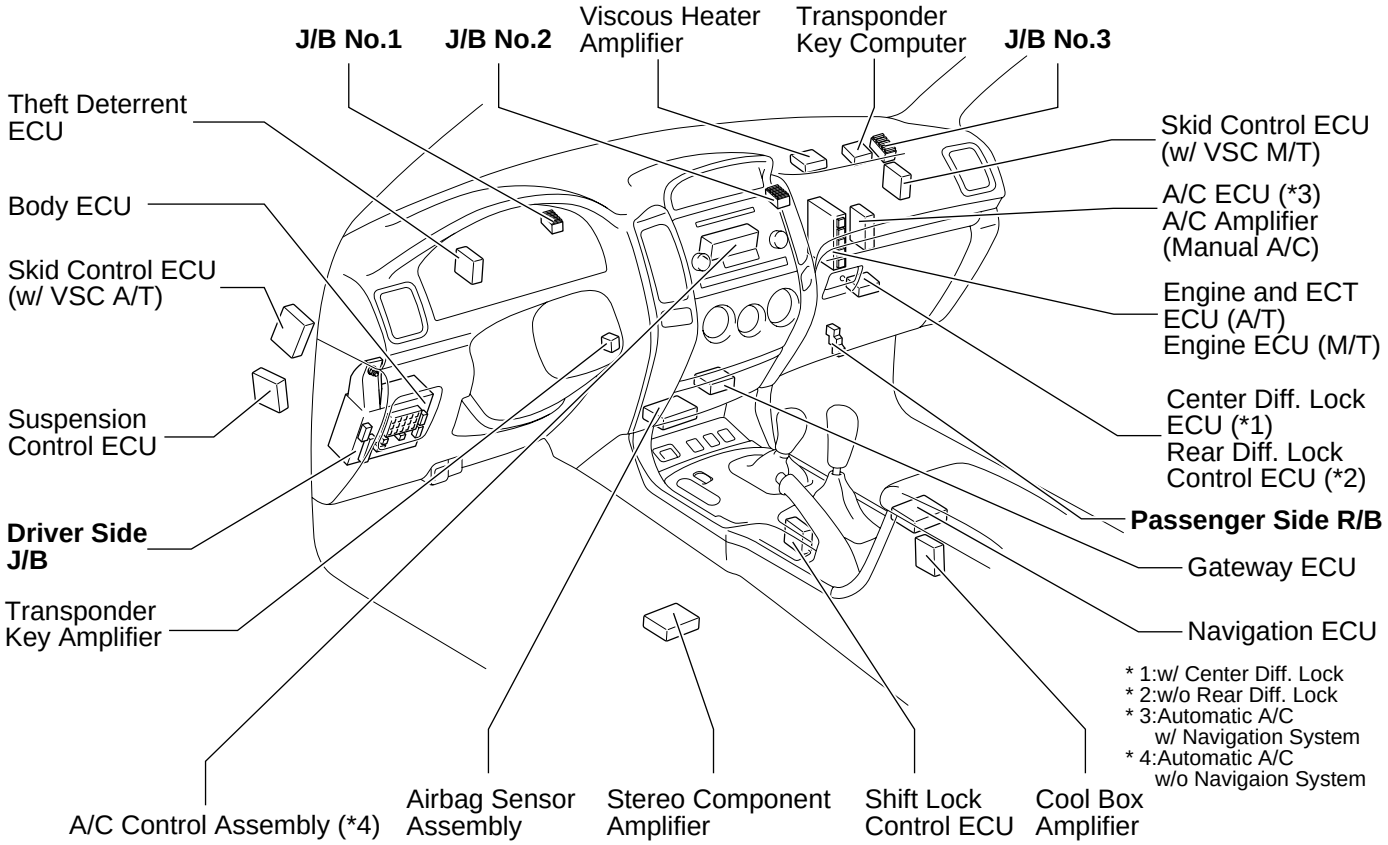

(RHD)

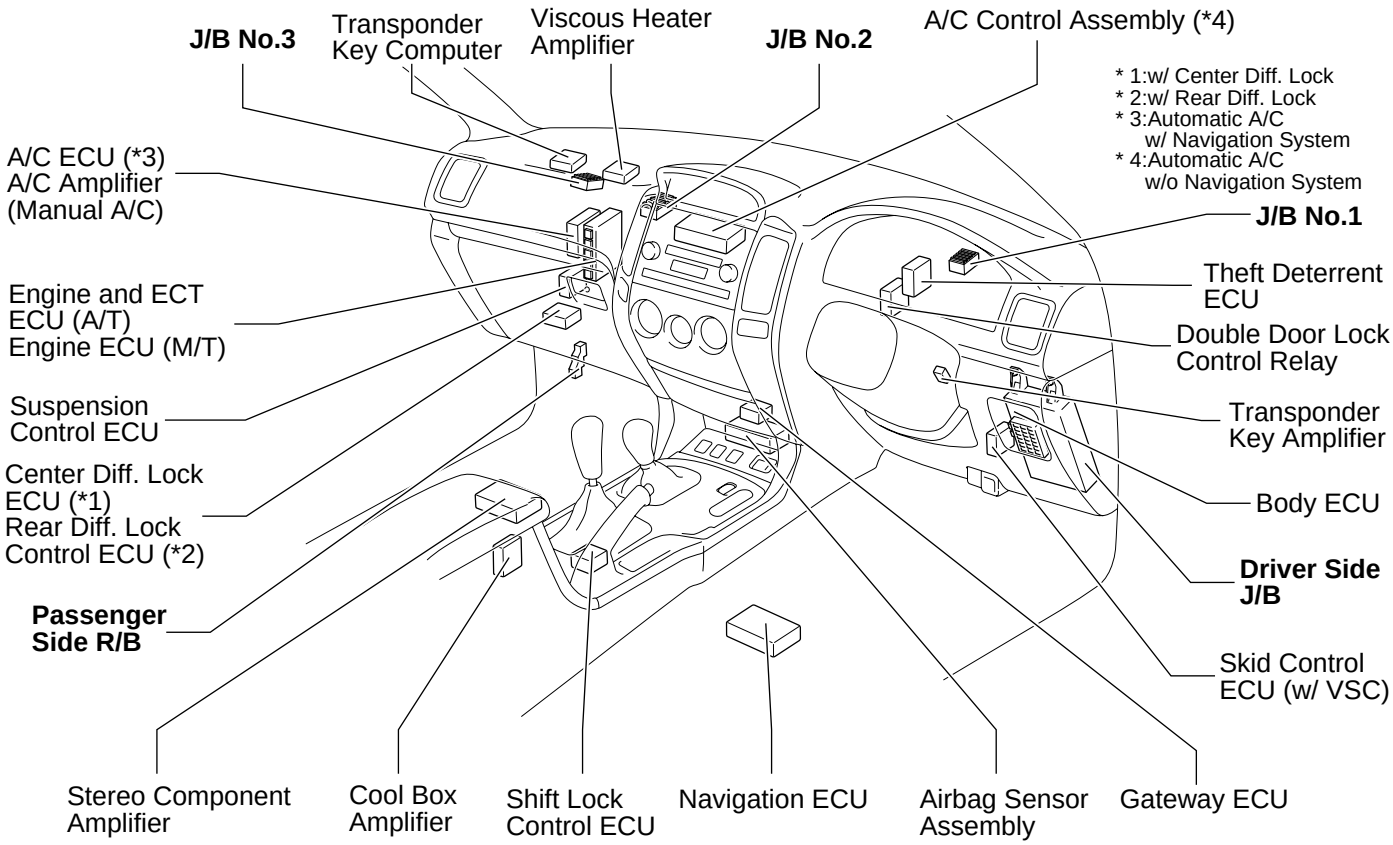

[Body]
(5–Door)

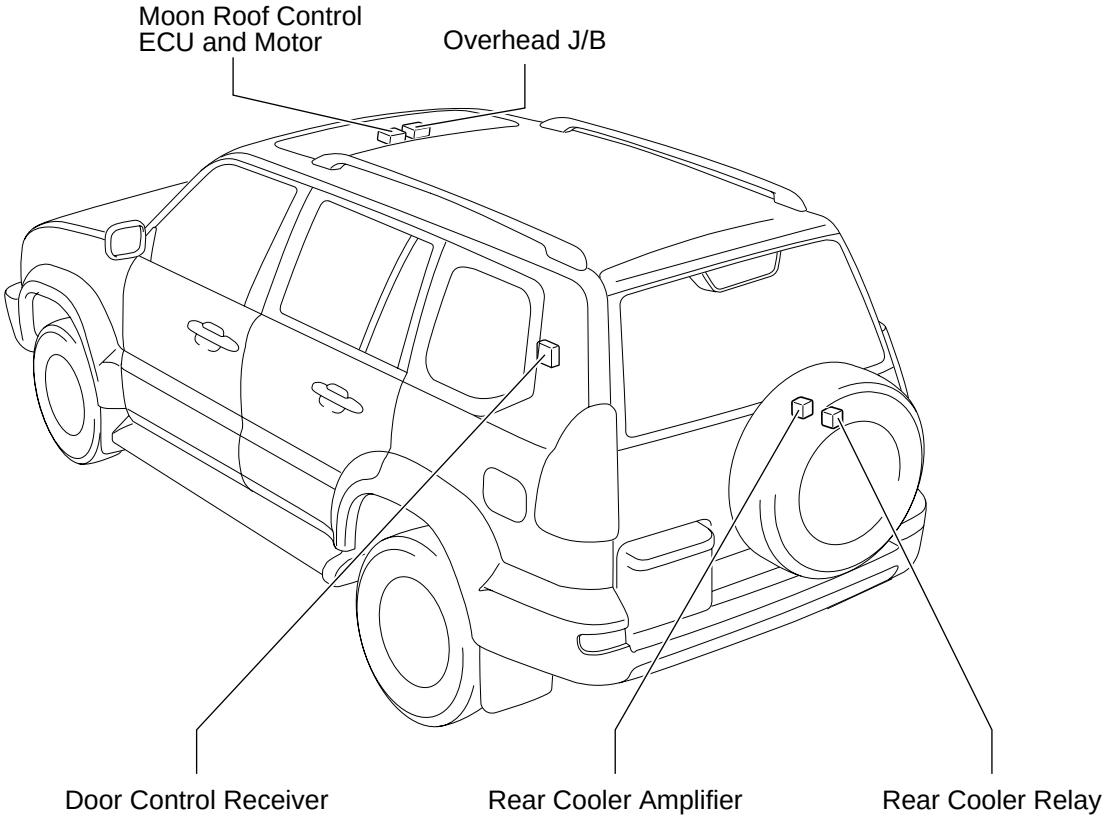

(3–Door)

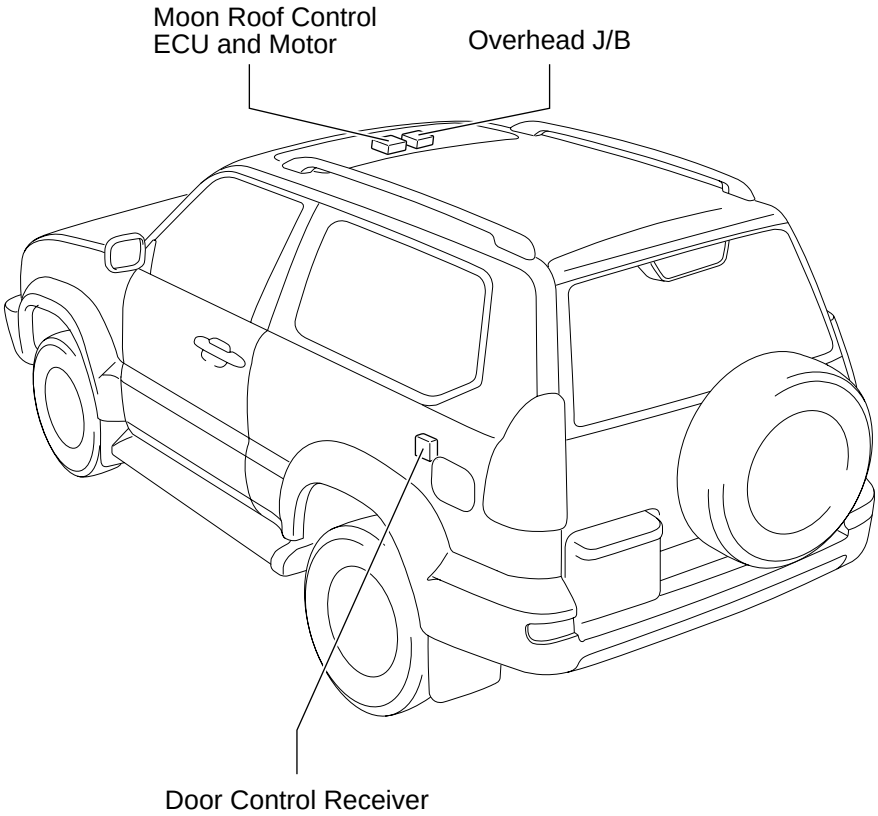

② : Engine Room R/B	Engine Compartment Left (See Page 20)

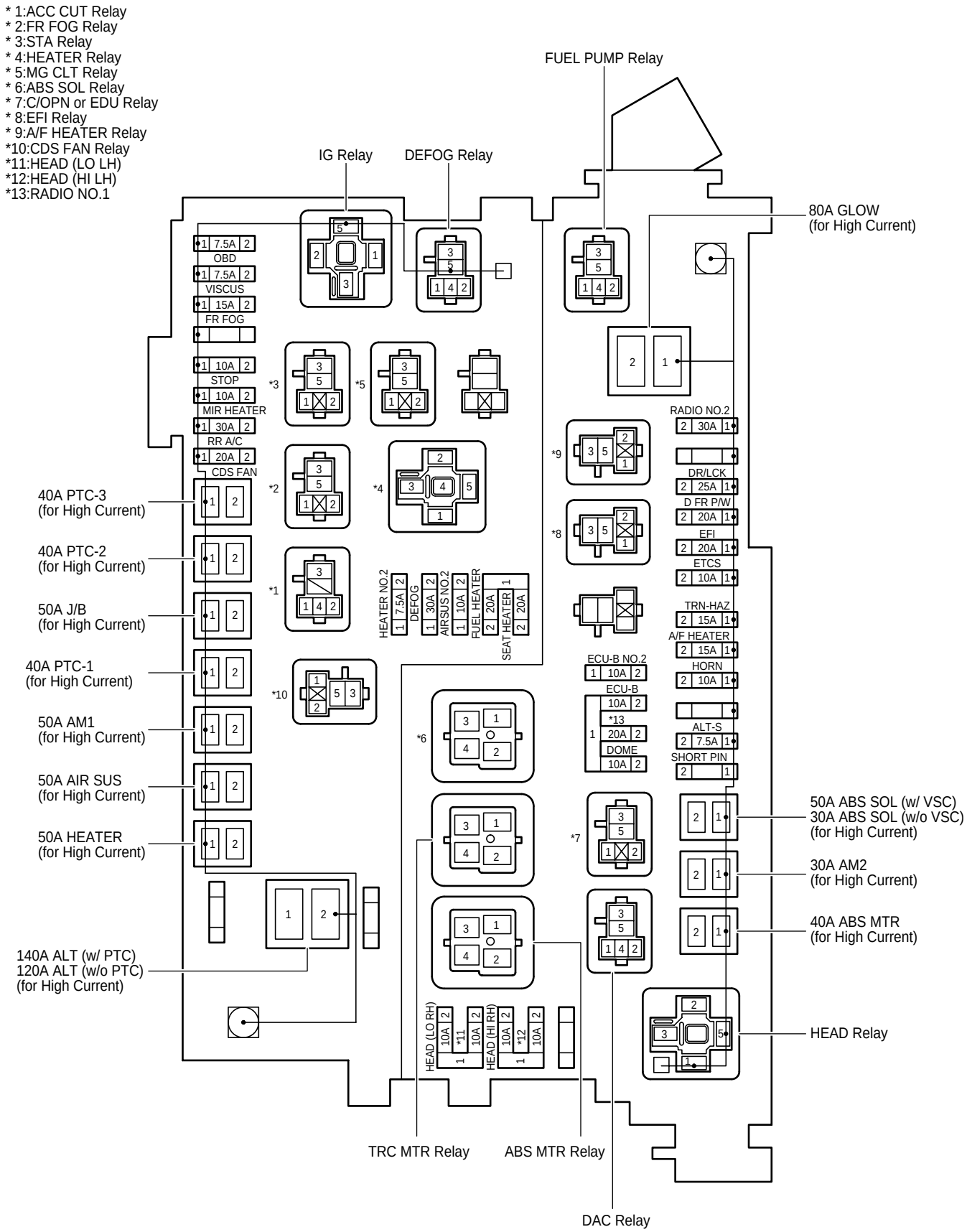

F RELAY LOCATIONS

① : Engine Room R/B No.1	LHD : Engine Compartment Right (See Page 20)
	RHD : Engine Compartment Left (See Page 20)

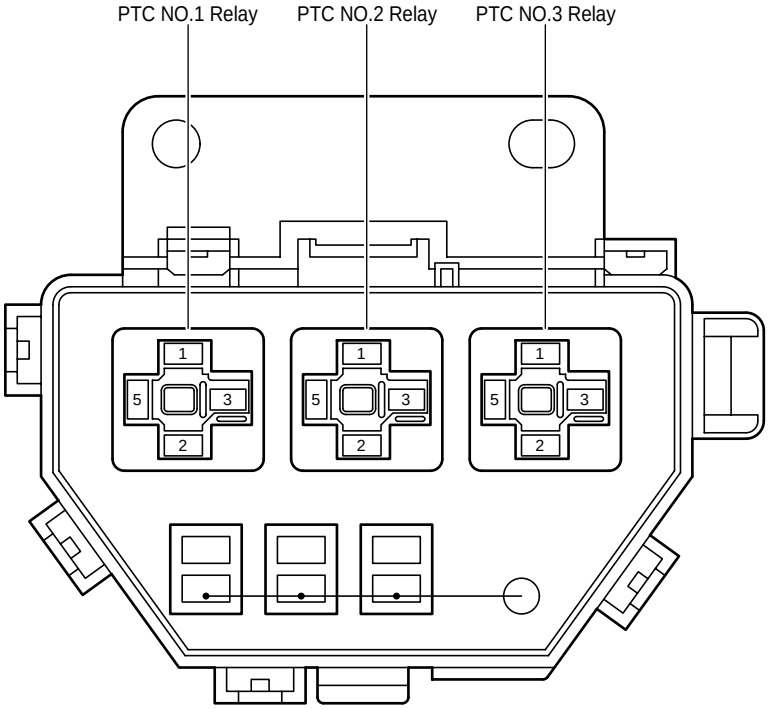

③ : Engine Room R/B No.3	Engine Compartment Left (See Page 20)

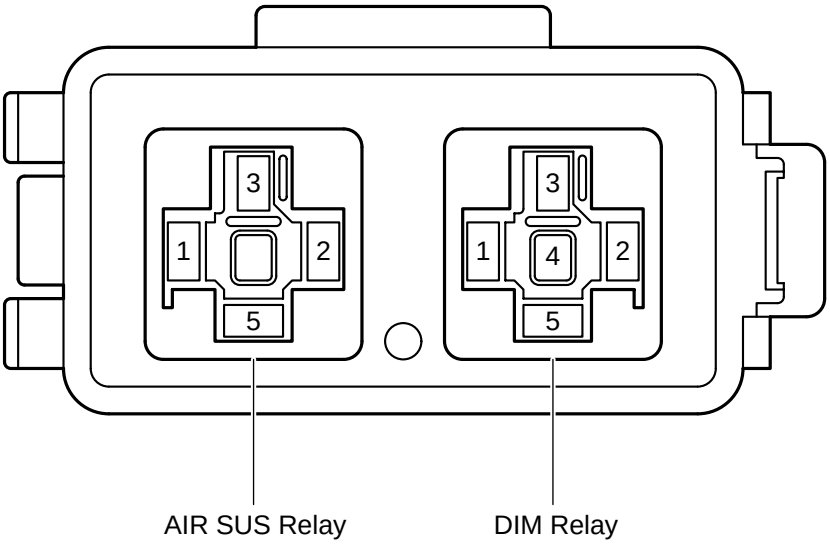

④ : Engine Room R/B No.4	Engine Compartment Left (See Page 20)

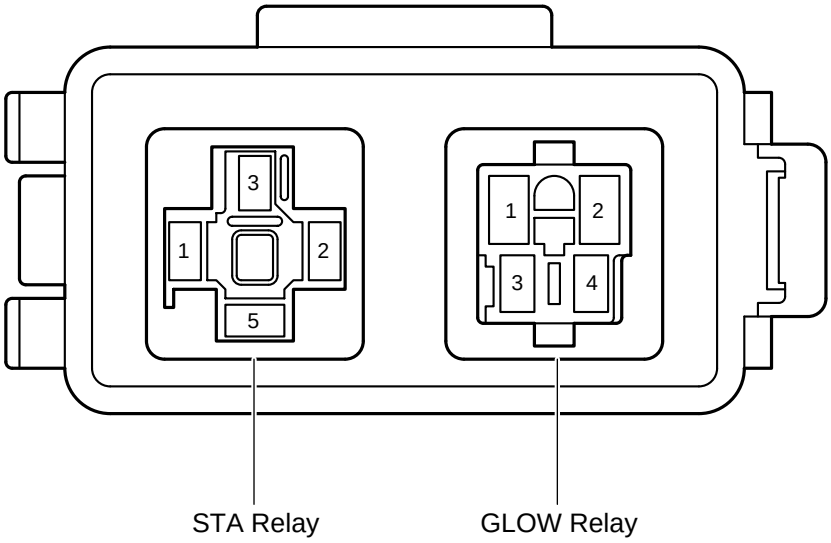

⑤ : Passenger Side R/B	LHD : Right Kick Panel (See Page 21)
	RHD : Left Kick Panel (See Page 21)

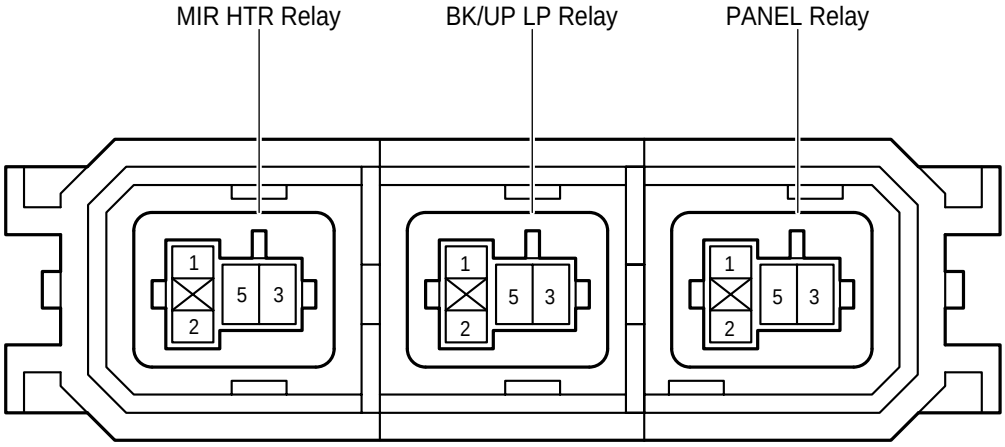

⬭ : Driver Side J/B	Lower Finish Panel (See Page 21)

(LHD)

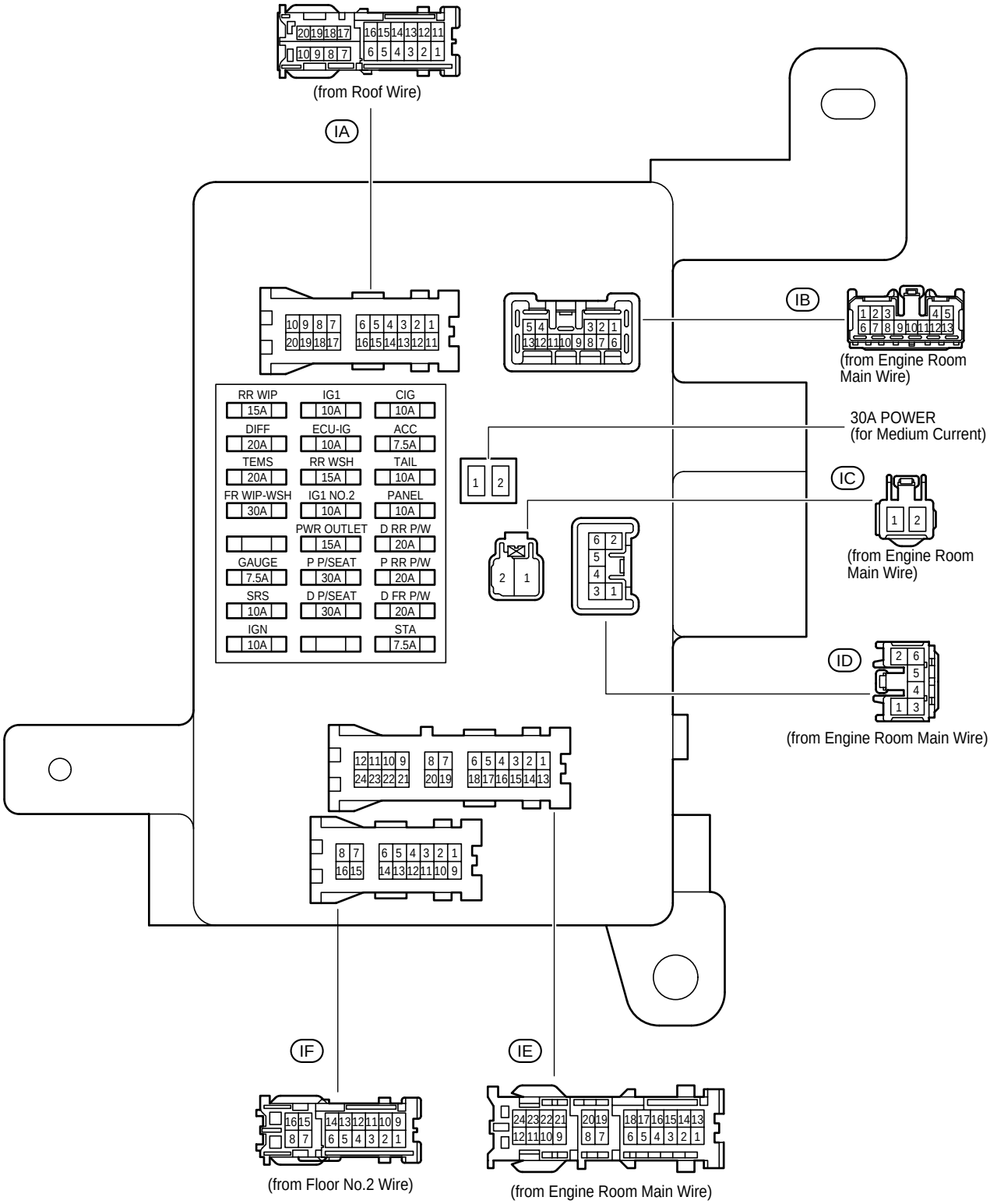

(Inner Circuit : See Page 30)

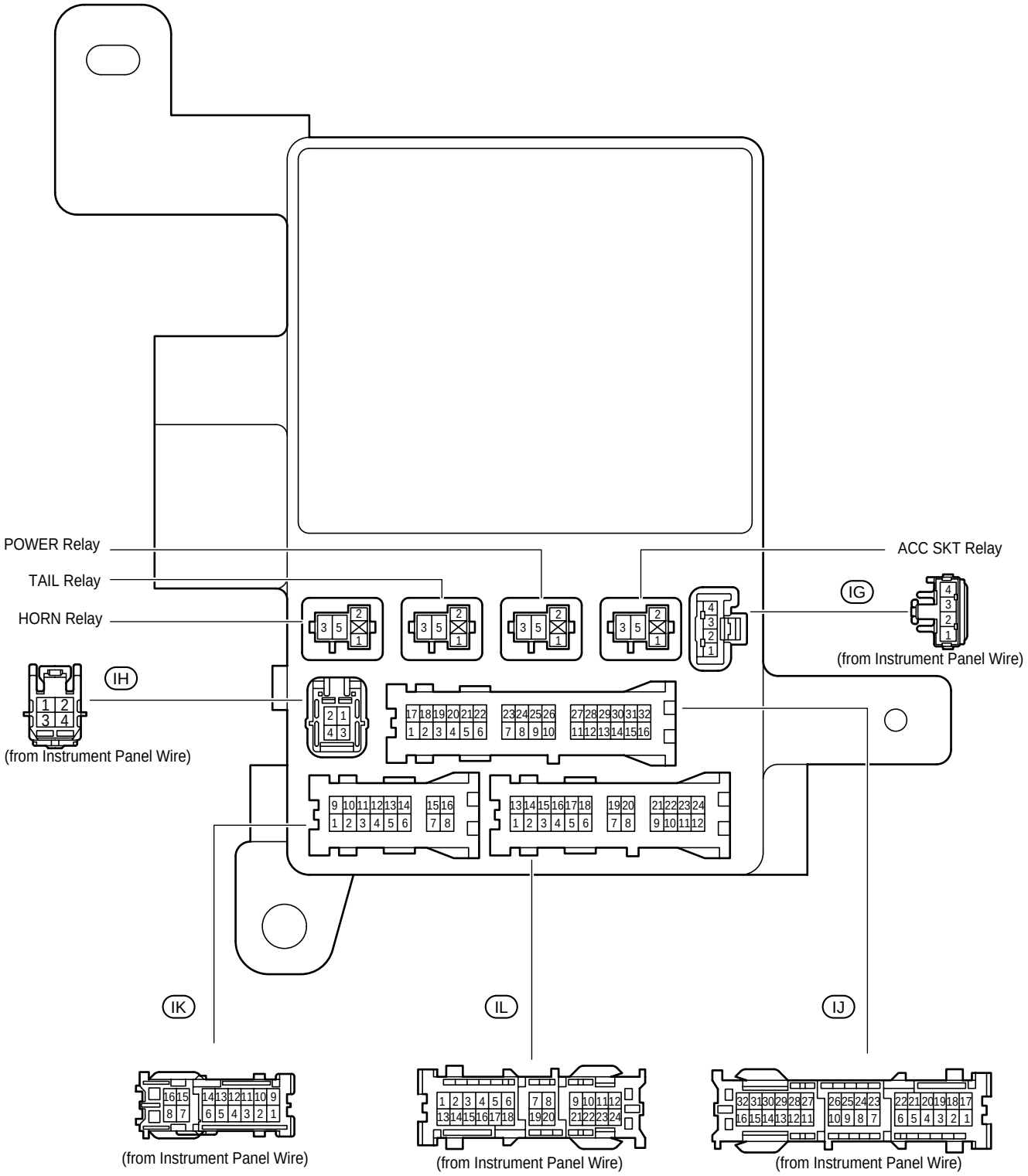

: Driver Side J/B	Lower Finish Panel (See Page 21)

(RHD)

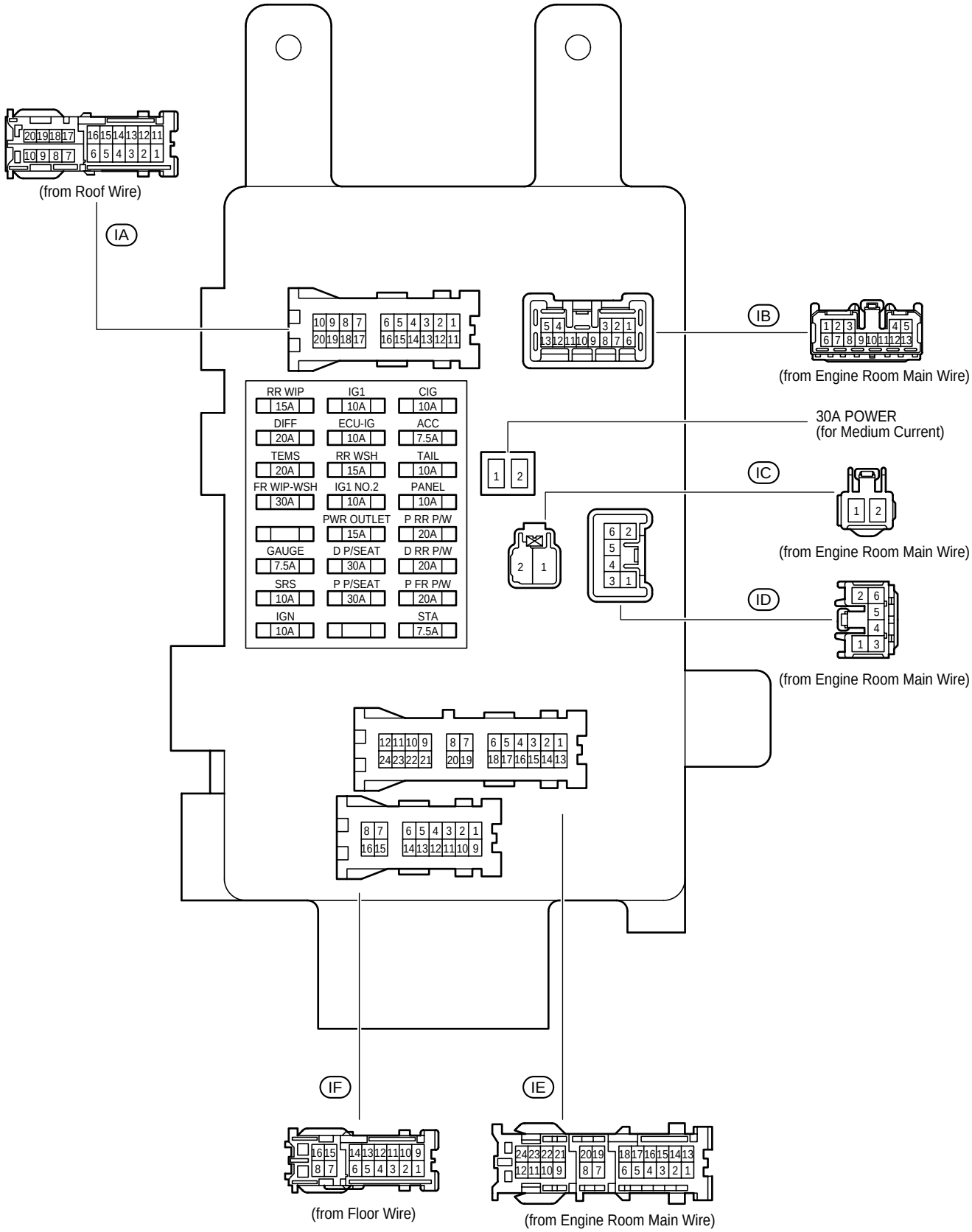

(Inner Circuit : See Page 30)

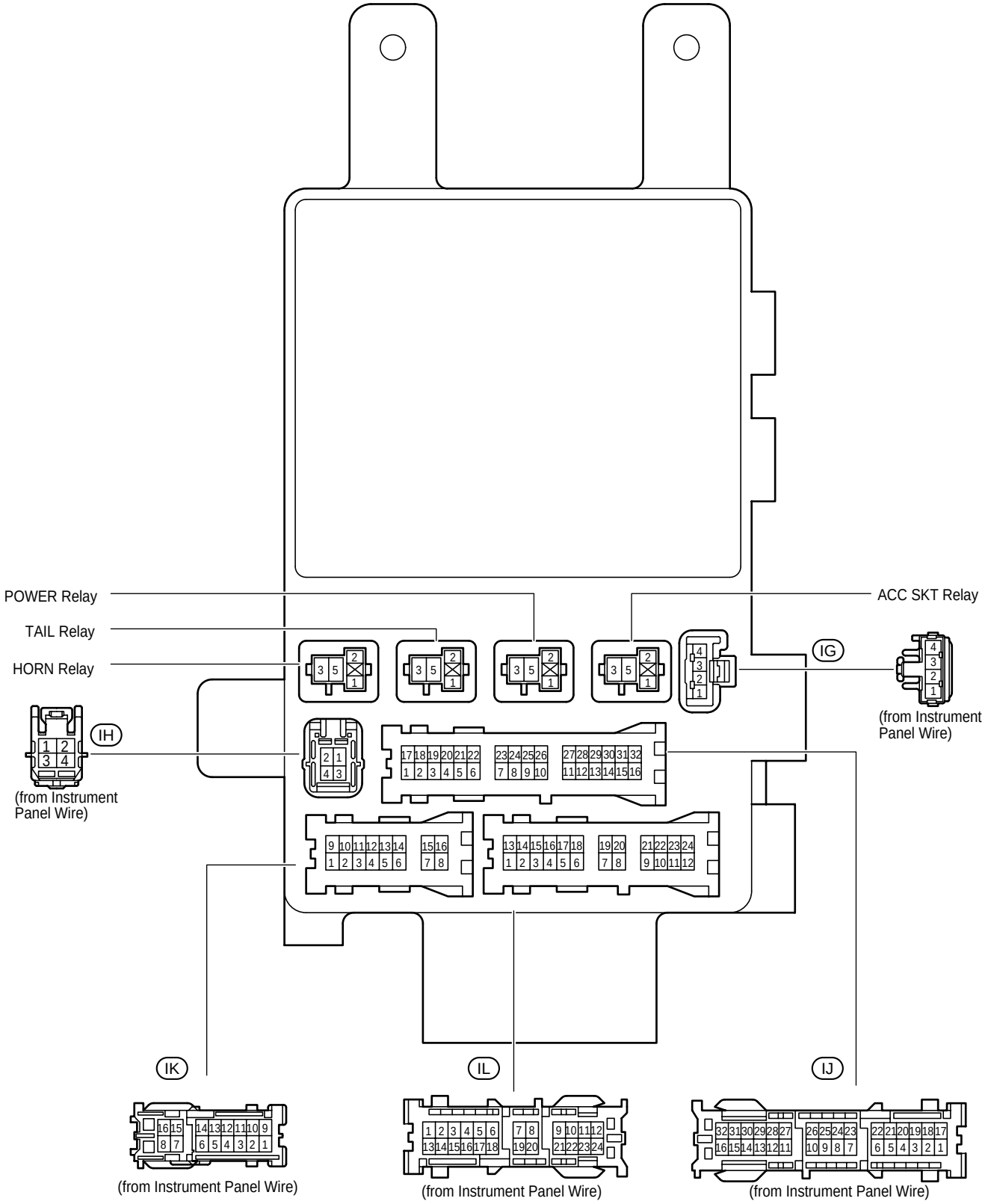

[Driver Side J/B Inner Circuit]

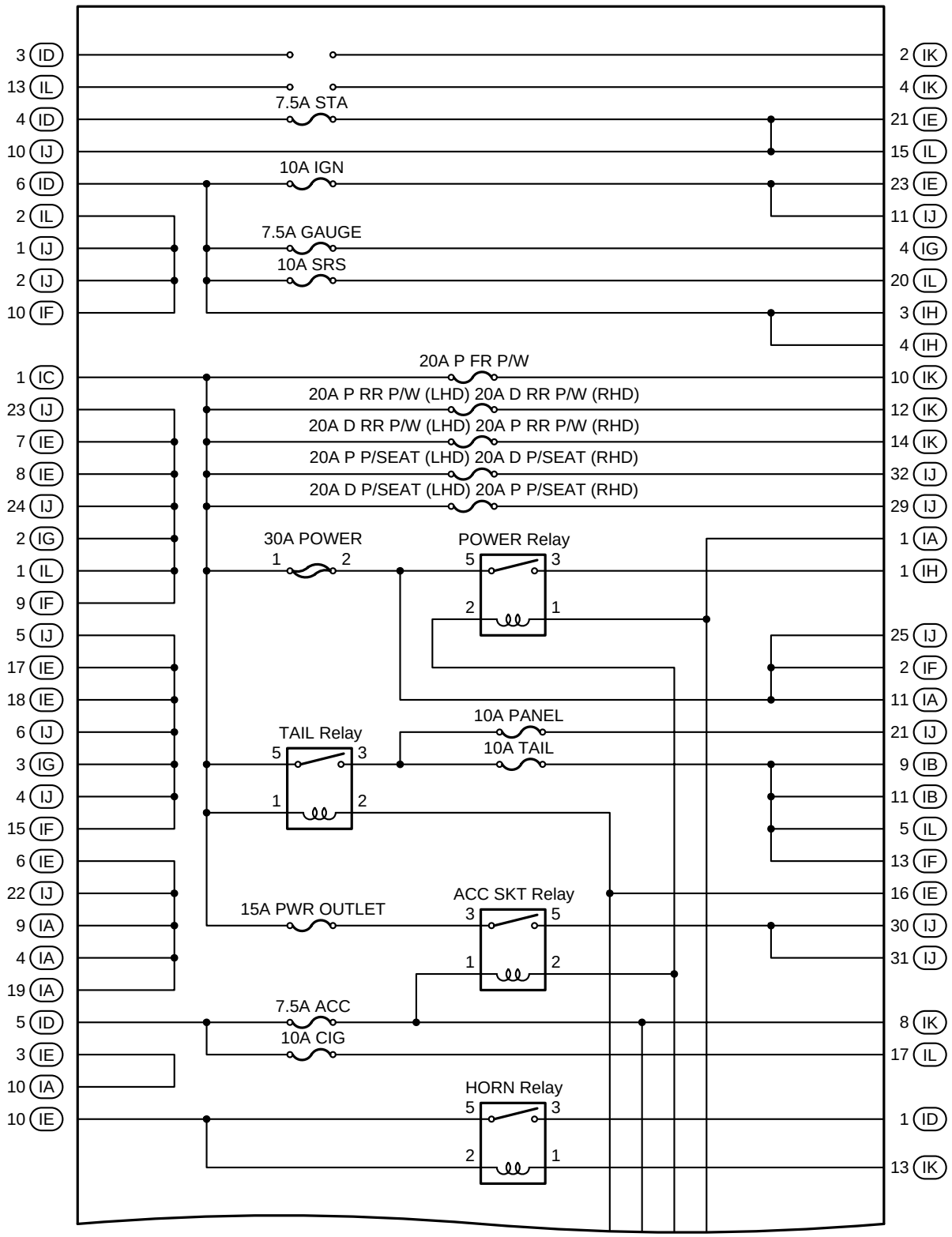

(Cont. Next Page)

(Cont' d)

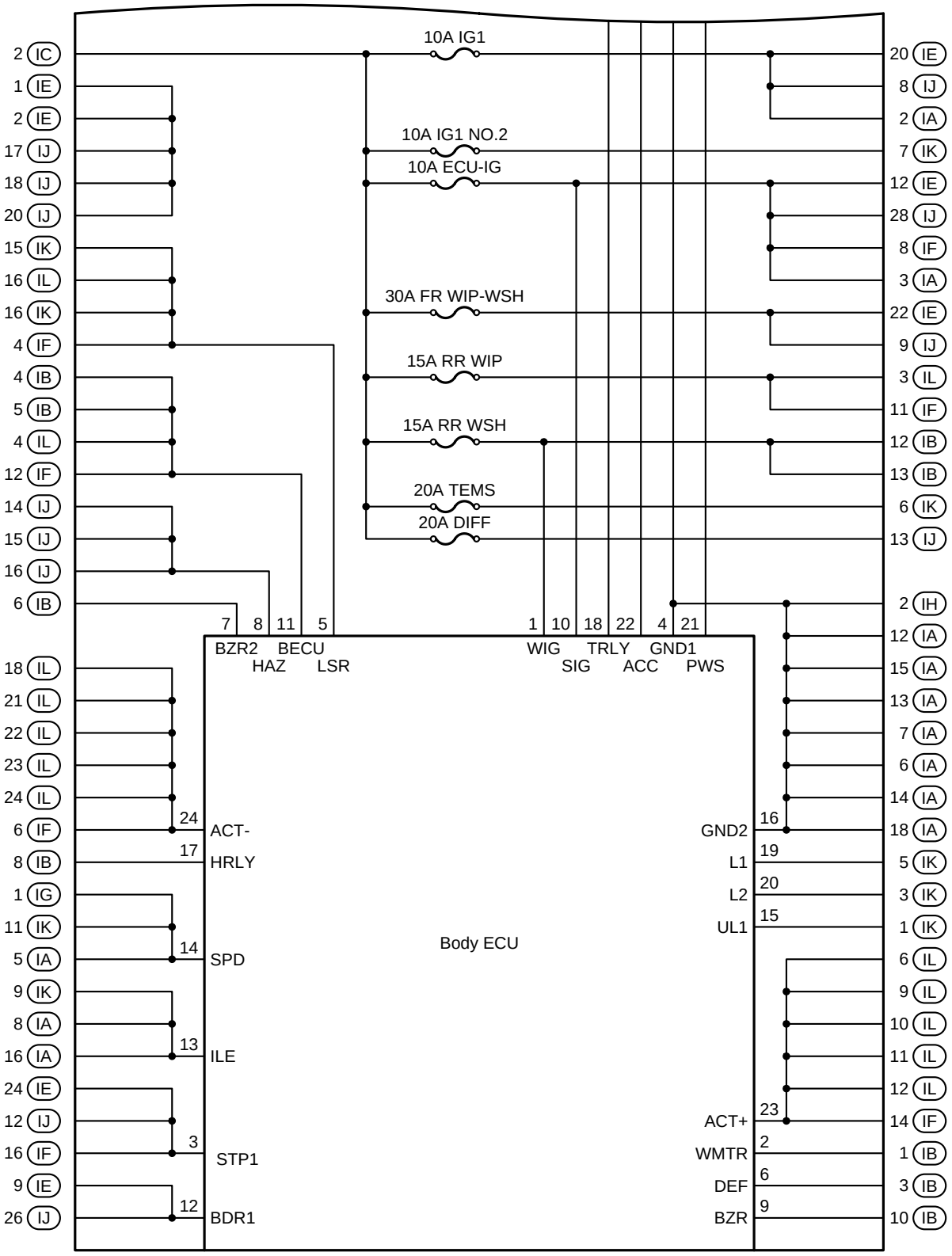
10A IG1
10A IG1 NO.2
10A ECU-IG
30A FR WIP-WSH
15A RR WIP
15A RR WSH
20A TEMS
20A DIFF
2 IC
1 IE
2 IE
17 IJ
18 IJ
20 IJ
15 IK
16 IL
16 IK
4 IF
4 IB
5 IB
4 IL
12 IF
14 IJ
15 IJ
16 IJ
6 IB
18 IL
21 IL
22 IL
23 IL
24 IL
6 IF
8 IB
1 IG
11 IK
5 IA
9 IK
8 IA
16 IA
24 IE
12 IJ
16 IF
9 IE
26 IJ
20 IE
8 IJ
2 IA
7 IK
12 IE
28 IJ
8 IF
3 IA
22 IE
9 IJ
3 IL
11 IF
12 IB
13 IB
6 IK
13 IJ
2 IH
12 IA
15 IA
13 IA
7 IA
6 IA
14 IA
18 IA
5 IK
3 IK
1 IK
6 IL
9 IL
10 IL
11 IL
12 IL
14 IF
1 IB
3 IB
10 IB
7 BZR2
8 HAZ
11 BECU
5 LSR
1 WIG
10 SIG
18 TRLY
22 ACC
4 GND1
21 PWS
24 ACT-
17 HRLY
14 SPD
13 ILE
3 STP1
12 BDR1
Body ECU
16 GND2
19 L1
20 L2
15 UL1
23 ACT+
2 WMTR
6 DEF
9 BZR

: J/B No.1	LHD : Instrument Panel Reinforcement Left (See Page 21)
	RHD : Instrument Panel Reinforcement Right (See Page 21)

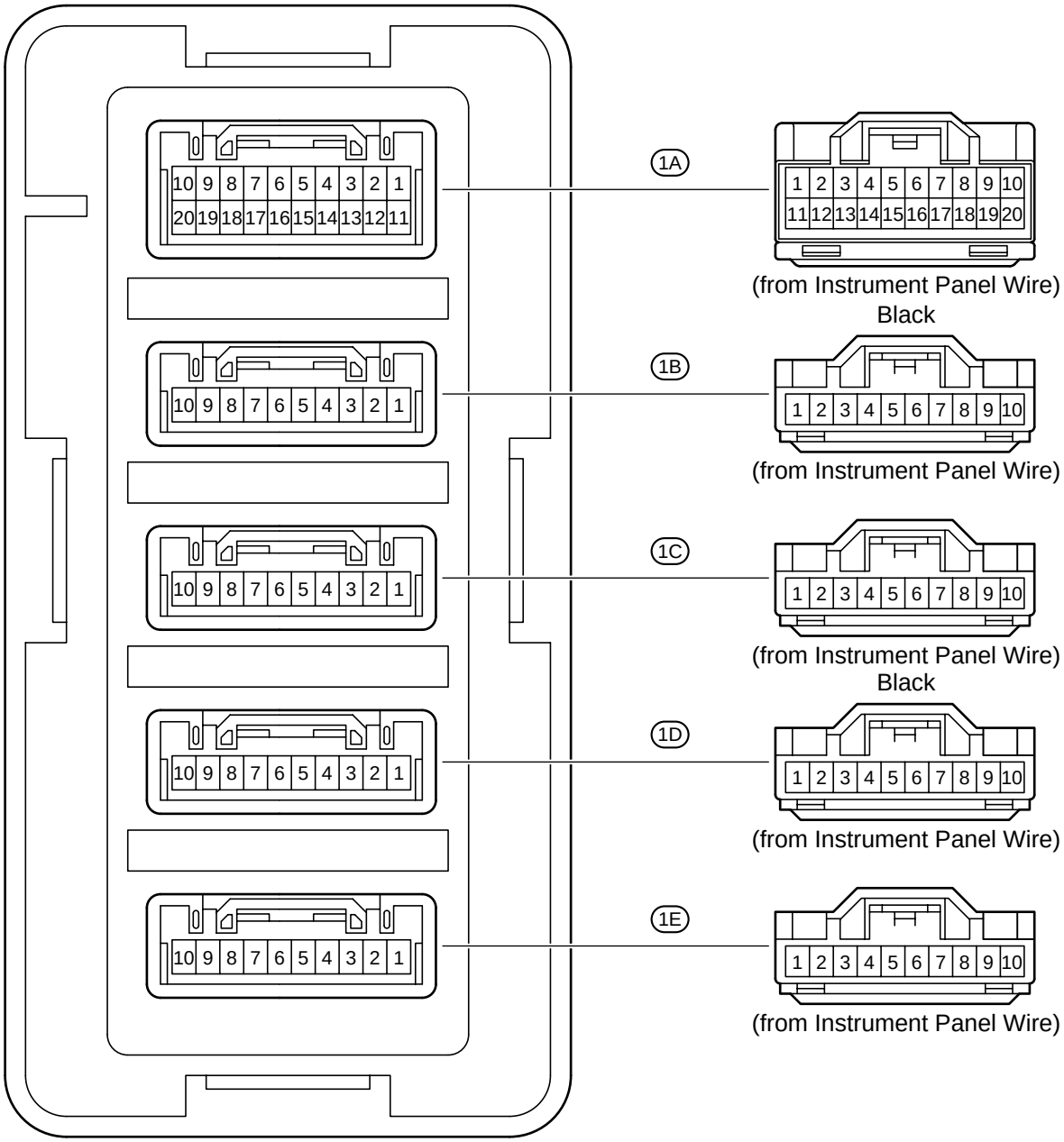

[J/B No.1 Inner Circuit]

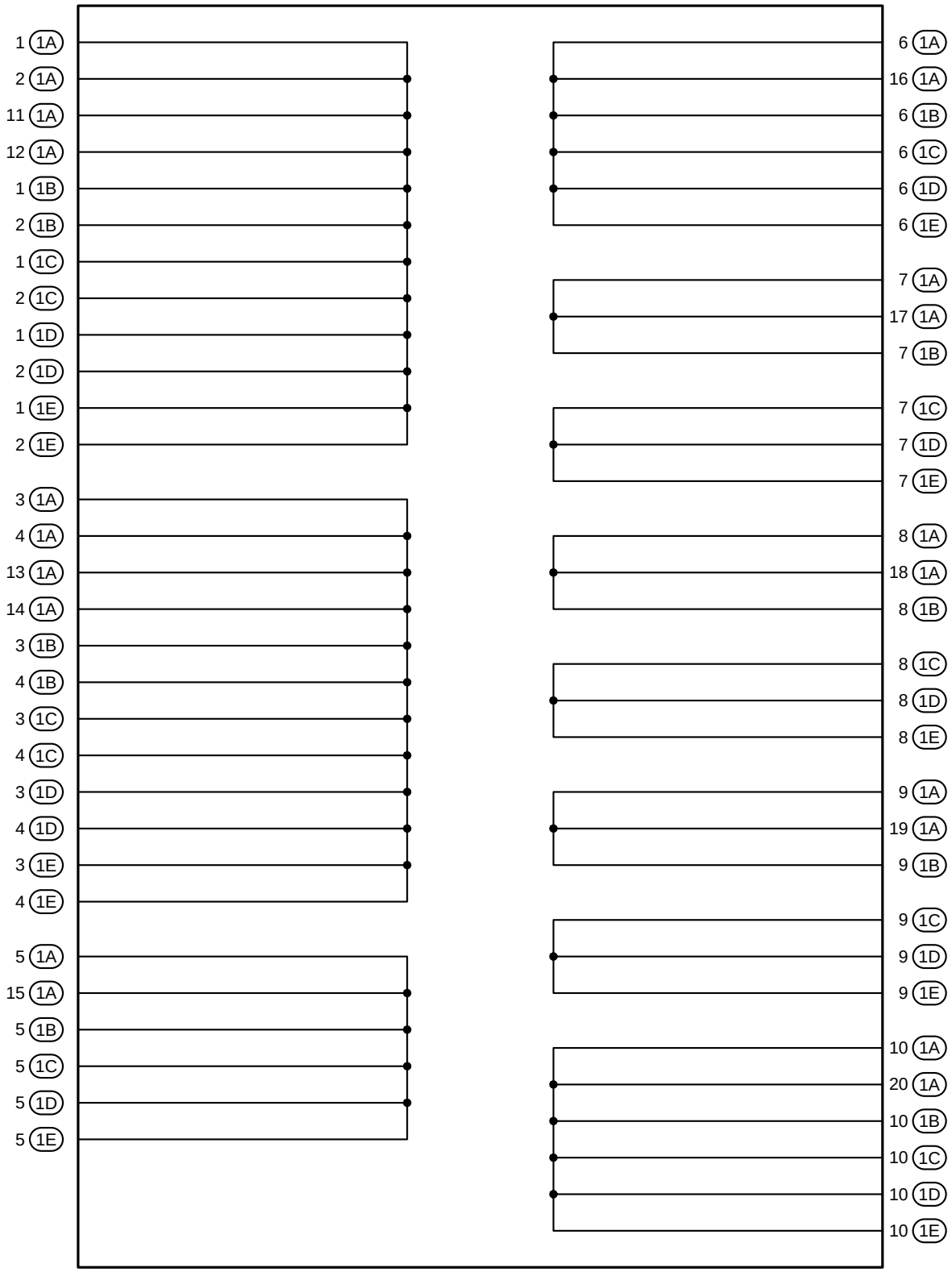

⬭ : J/B No.2	Instrument Panel Reinforcement Center (See Page 21)

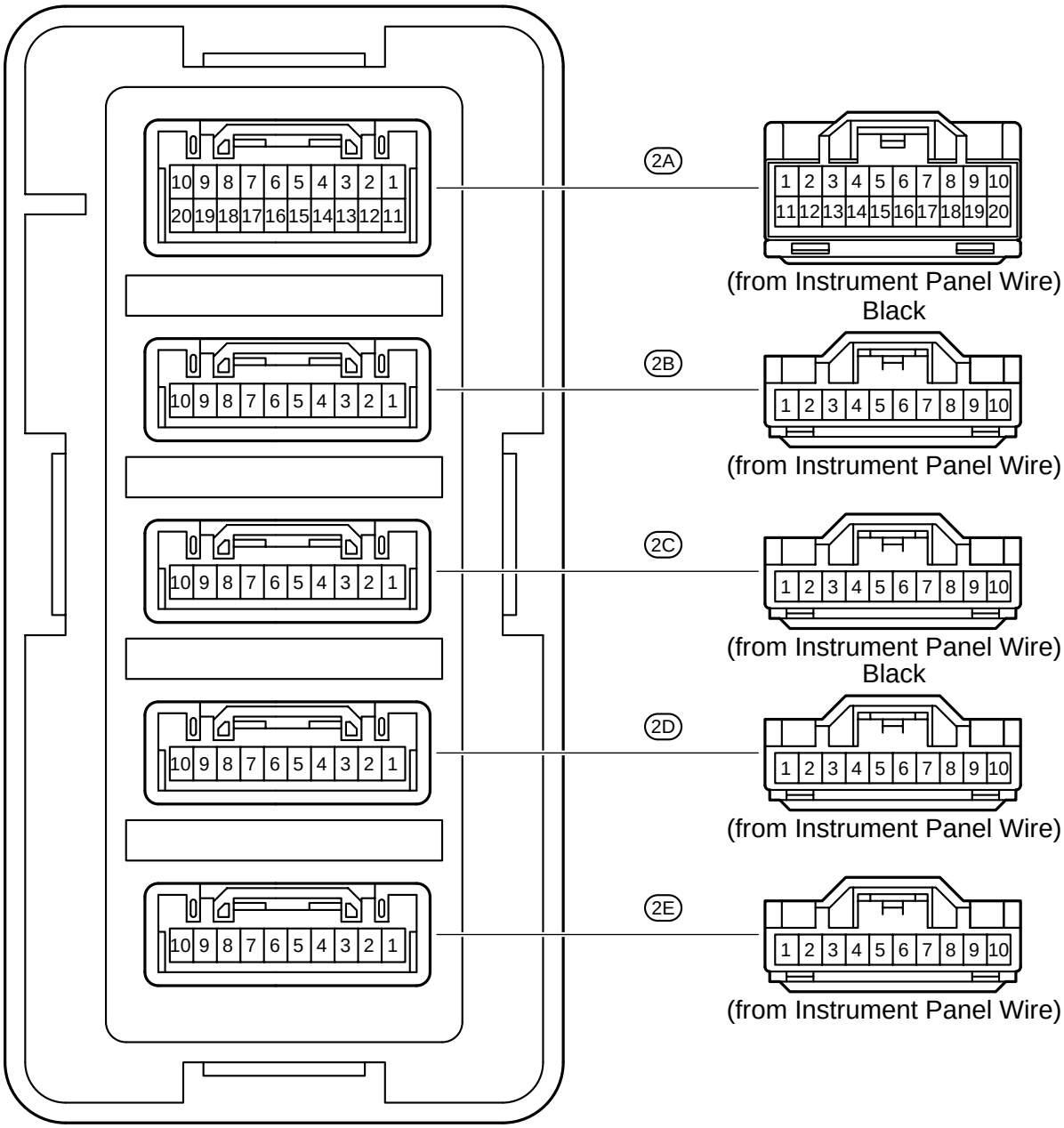

[J/B No.2 Inner Circuit]

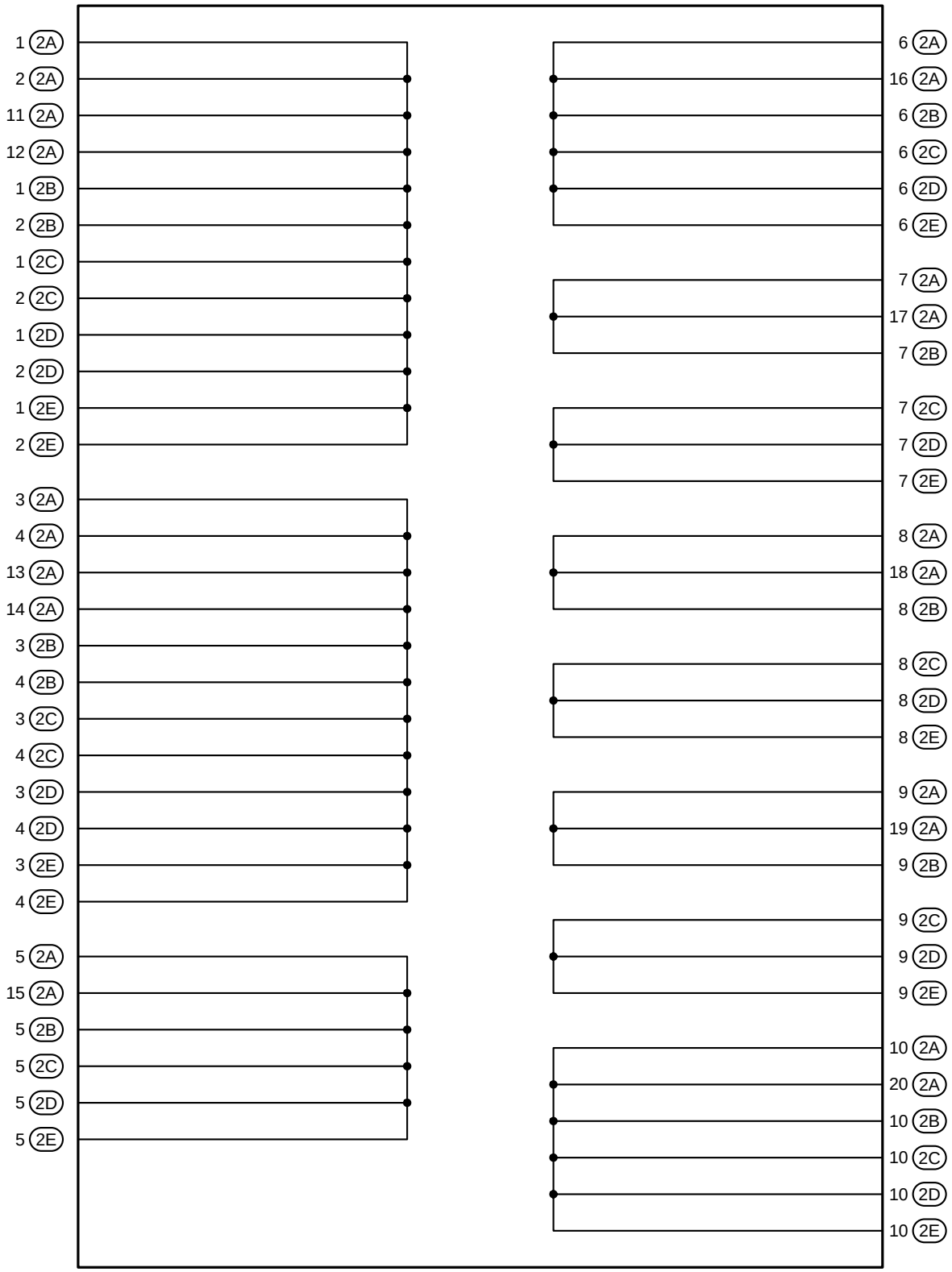

: J/B No.3	LHD : Instrument Panel Reinforcement Right (See Page 21)
	RHD : Instrument Panel Reinforcement Left (See Page 21)

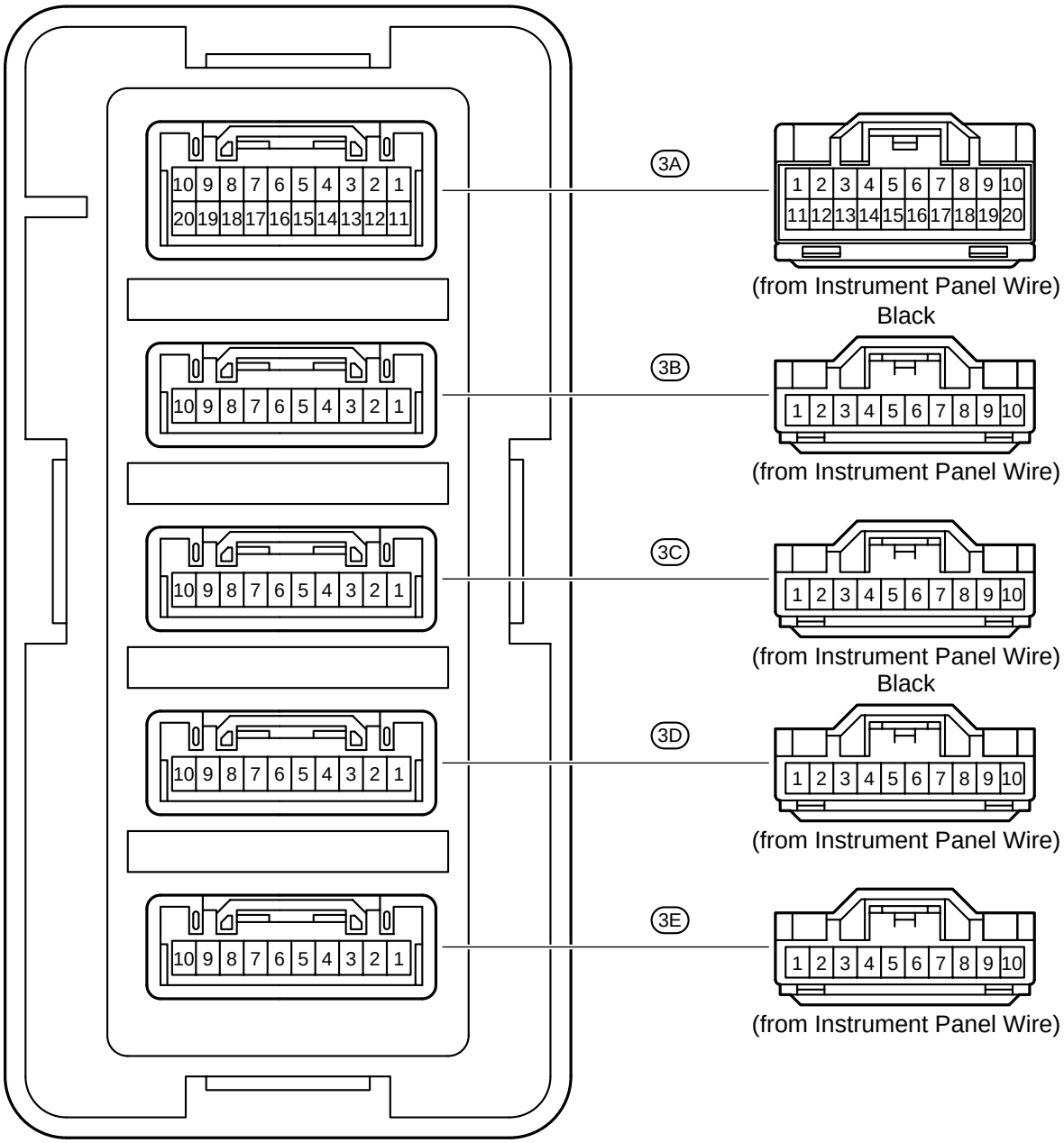

[J/B No.3 Inner Circuit]

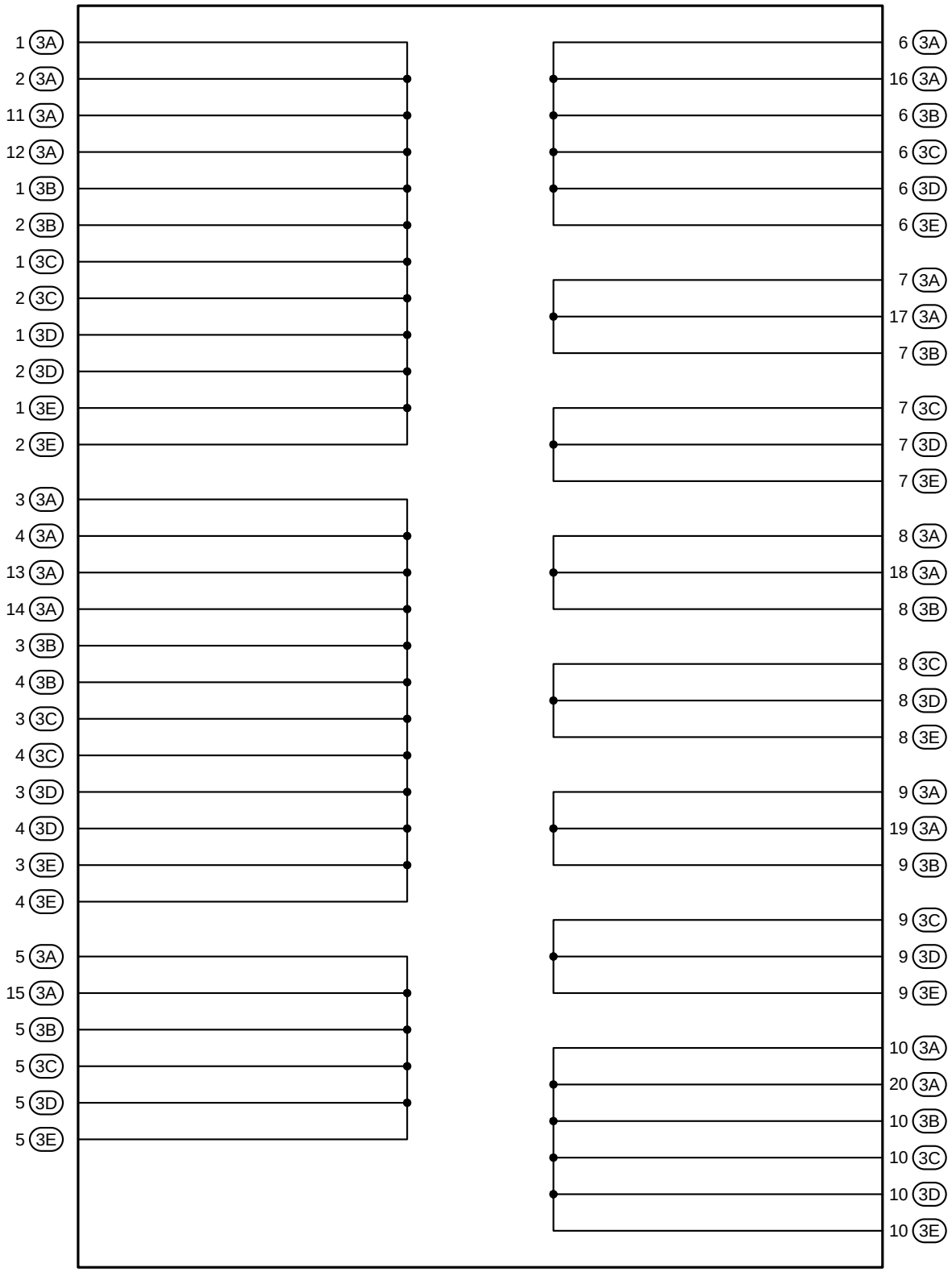

Position of Parts in Engine Compartment

[LHD : 1GR–FE]

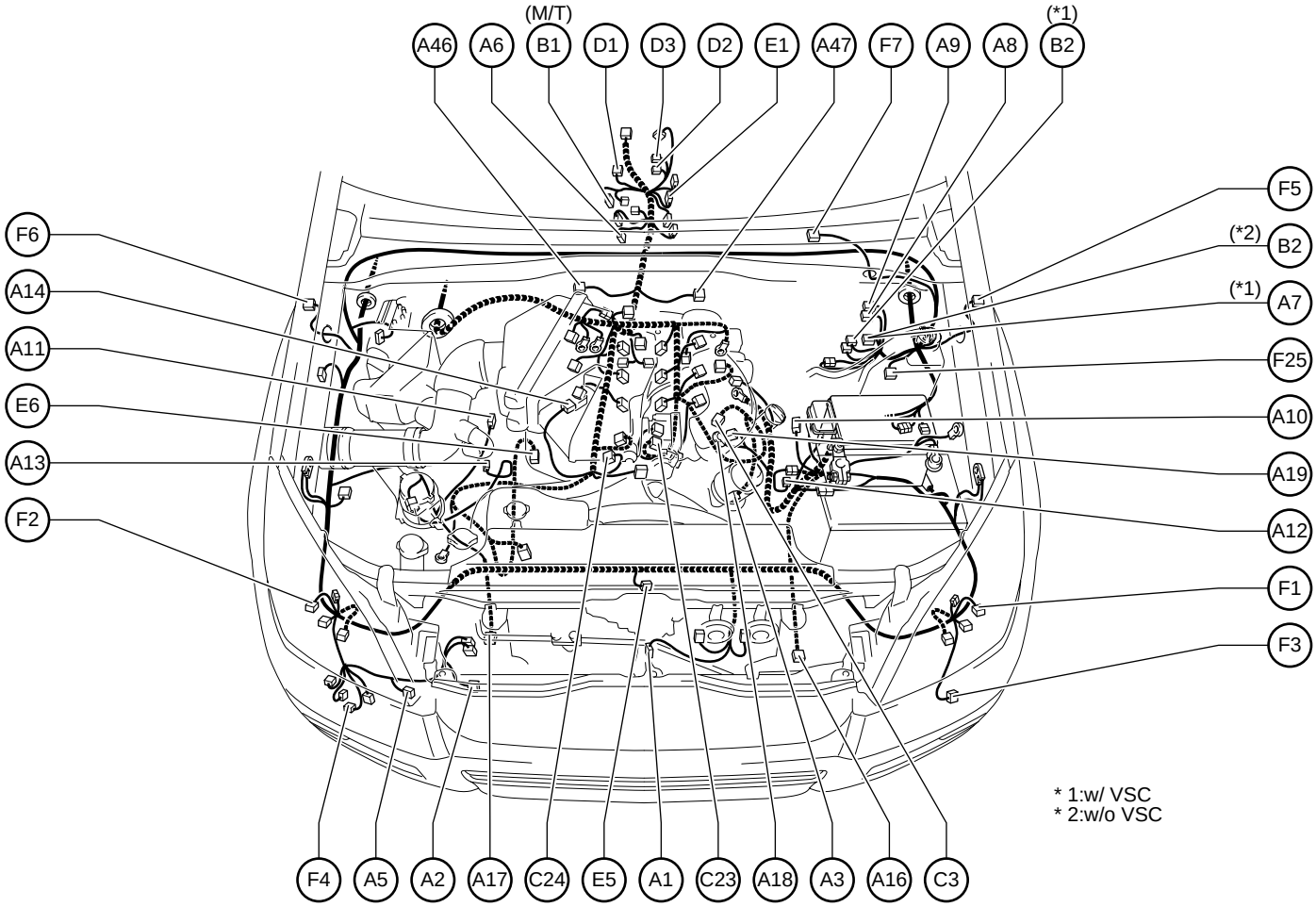

A 1 A/C Ambient Temp. Sensor
A 2 A/C Condenser Fan Motor
A 3 A/C Lock Sensor
A/C Magnetic Clutch
A 5 A/C Magnetic Valve
A 6 A/T Oil Temp. Sensor
A 7 ABS & BA & TRC & VSC Actuator
A 8 ABS & BA & TRC & VSC Actuator
A 9 ABS & BA & TRC & VSC Actuator
A 10 ABS Speed Sensor Front LH
A 11 ABS Speed Sensor Front RH
A 12 Absorber Control Actuator Front LH
A 13 Absorber Control Actuator Front RH
A 14 Air Flow Meter
A 16 Airbag Sensor Front LH
A 17 Airbag Sensor Front RH
A 18 Alternator
A 19 Alternator
A 46 Air Fuel Ratio Sensor (Bank 1 Sensor 1)
A 47 Air Fuel Ratio Sensor (Bank 2 Sensor 1)

B 1 Back–Up Light SW
B 2 Brake Fluid Level Warning SW

C 3 Crankshaft Position Sensor
C 23 Camshaft Timing Oil Control Valve LH
C 24 Camshaft Timing Oil Control Valve RH

D 1 Detection SW (Transfer 4WD Position)
D 2 Detection SW (Transfer L4 Position)
D 3 Detection SW (Transfer Neutral Position)

E 1 ECT Solenoid
E 5 Engine Hood Courtesy SW
E 6 Engine Oil Level Sensor

F 1 Front Clearance Light LH
Front Turn Signal Light LH
F 2 Front Clearance Light RH
Front Turn Signal Light RH
F 3 Front Fog Light LH
F 4 Front Fog Light RH
F 5 Front Side Turn Signal Light LH
F 6 Front Side Turn Signal Light RH
F 7 Front Wiper Motor
F 25 Fuel Pump Resistor

Position of Parts in Engine Compartment

[LHD : 1GR–FE]

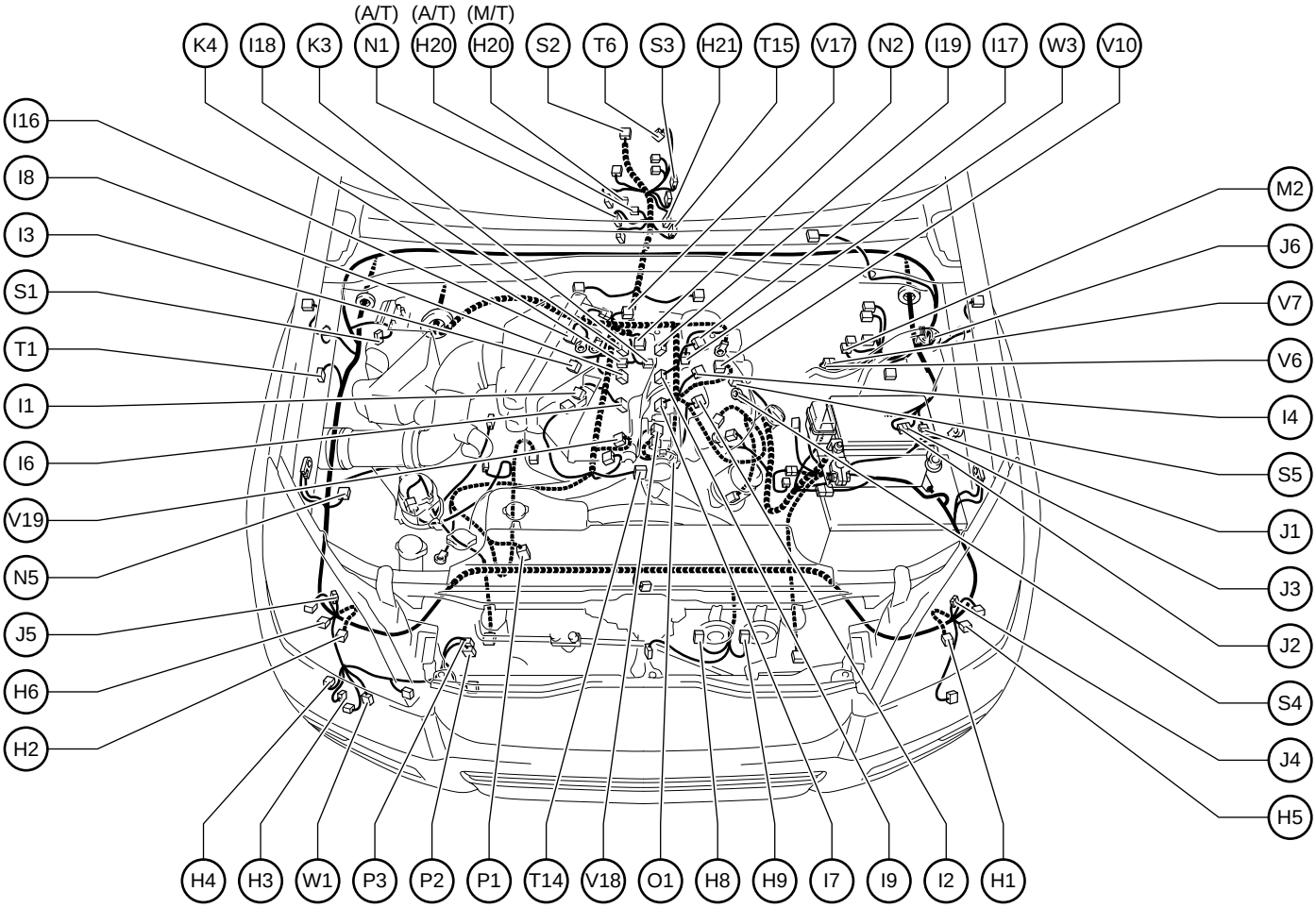

H 1 Headlight Beam Level Control Actuator LH
H 2 Headlight Beam Level Control Actuator RH
H 3 Headlight Cleaner Motor
H 4 Headlight Cleaner Relay
H 5 Headlight LH
H 6 Headlight RH
H 8 Horn (High)
H 9 Horn (Low)
H 20 Heated Oxygen Sensor (Bank 1 Sensor 2)
H 21 Heated Oxygen Sensor (Bank 2 Sensor 2)

I 1 Ignition Coil and Igniter No.1
I 2 Ignition Coil and Igniter No.2
I 3 Ignition Coil and Igniter No.3
I 4 Ignition Coil and Igniter No.4
I 6 Injector No.1
I 7 Injector No.2
I 8 Injector No.3
I 9 Injector No.4
I 16 Ignition Coil and Igniter No.5
I 17 Ignition Coil and Igniter No.6
I 18 Injector No.5
I 19 Injector No.6

J 1 Junction Connector
J 2 Junction Connector
J 3 Junction Connector
J 4 Junction Connector
J 5 Junction Connector
J 6 Junction Connector

K 3 Knock Sensor LH
K 4 Knock Sensor RH

M 2 Master Cylinder Pressure Sensor

N 1 Neutral Start SW
N 2 Noise Filter
N 5 Noise Filter (Condenser Fan)

O 1 Oil Pressure SW

P 1 Power Steering Oil Pressure SW
P 2 Pressure SW
P 3 Pressure SW

S 1 Skid Control ECU with Actuator
S 2 Speed Sensor (Combination Meter)
S 3 Speed Sensor (ECT)
S 4 Starter
S 5 Starter

T 1 Theft Deterrent Horn
T 6 Transfer Actuator
T 14 Throttle Control Motor
Throttle Position Sensor
T 15 Turbine Speed Sensor

V 6 VSC Check Connector
V 7 VSC Check Connector
V 10 VSV (EVAP)
V 17 VSV (ACIS)
V 18 VVT Sensor LH
V 19 VVT Sensor RH

W 1 Washer Motor
W 3 Water Temp. Sensor

Position of Parts in Engine Compartment

[LHD : 3RZ–FE]

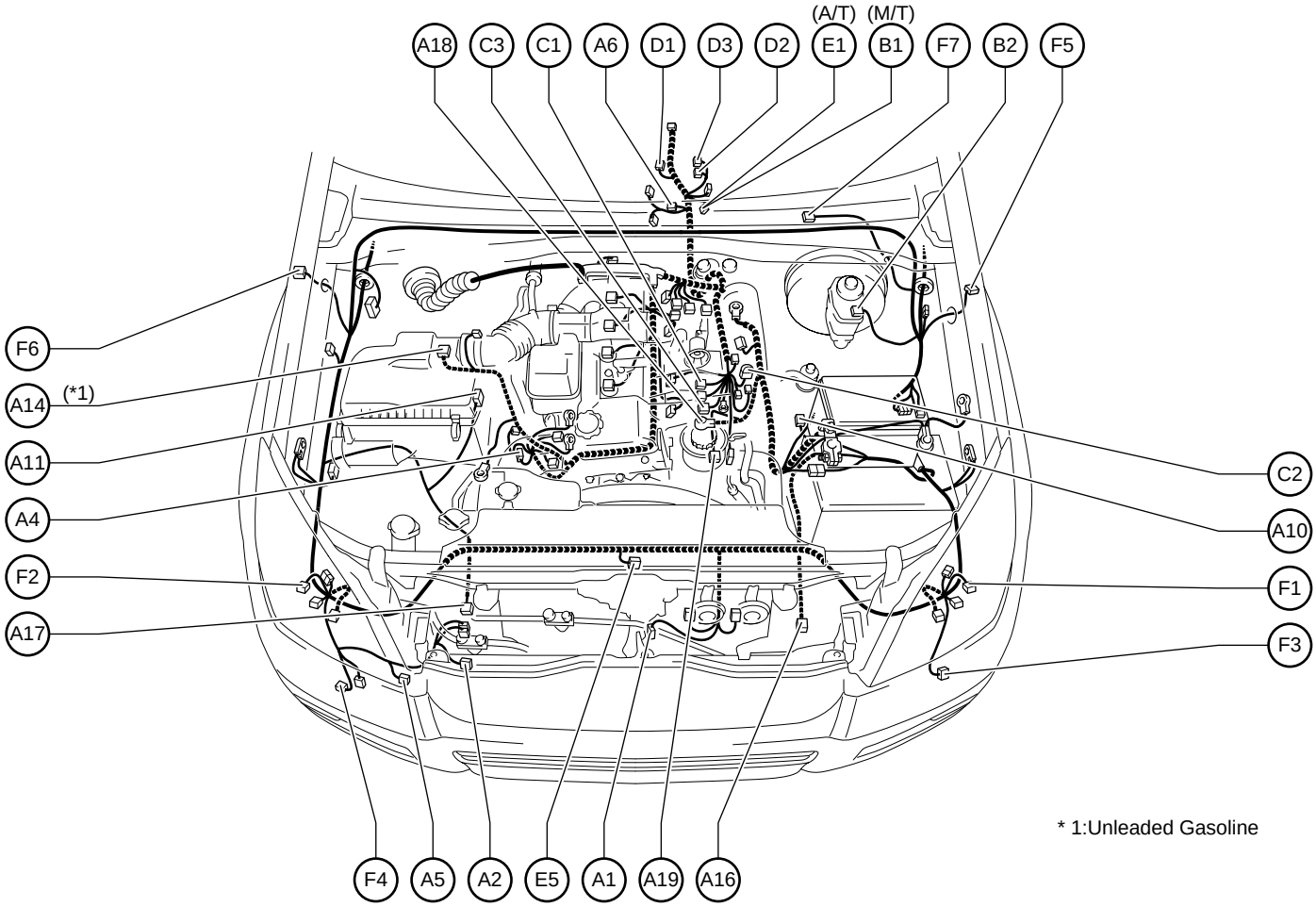

A 1 A/C Ambient Temp. Sensor
A 2 A/C Condenser Fan Motor
A 4 A/C Magnetic Clutch
A 5 A/C Magnetic Valve
A 6 A/T Oil Temp. Sensor
A 10 ABS Speed Sensor Front LH
A 11 ABS Speed Sensor Front RH
A 14 Air Flow Meter
A 16 Airbag Sensor Front LH
A 17 Airbag Sensor Front RH
A 18 Alternator
A 19 Alternator

B 1 Back–Up Light SW
B 2 Brake Fluid Level Warning SW

C 1 Camshaft Position Sensor
C 2 Check Connector
C 3 Crankshaft Position Sensor

D 1 Detection SW (Transfer 4WD Position)
D 2 Detection SW (Transfer L4 Position)
D 3 Detection SW (Transfer Neutral Position)

E 1 ECT Solenoid
E 5 Engine Hood Courtesy SW

F 1 Front Clearance Light LH
Front Turn Signal Light LH
F 2 Front Clearance Light RH
Front Turn Signal Light RH
F 3 Front Fog Light LH
F 4 Front Fog Light RH
F 5 Front Side Turn Signal Light LH
F 6 Front Side Turn Signal Light RH
F 7 Front Wiper Motor

Position of Parts in Engine Compartment

[LHD : 3RZ–FE]

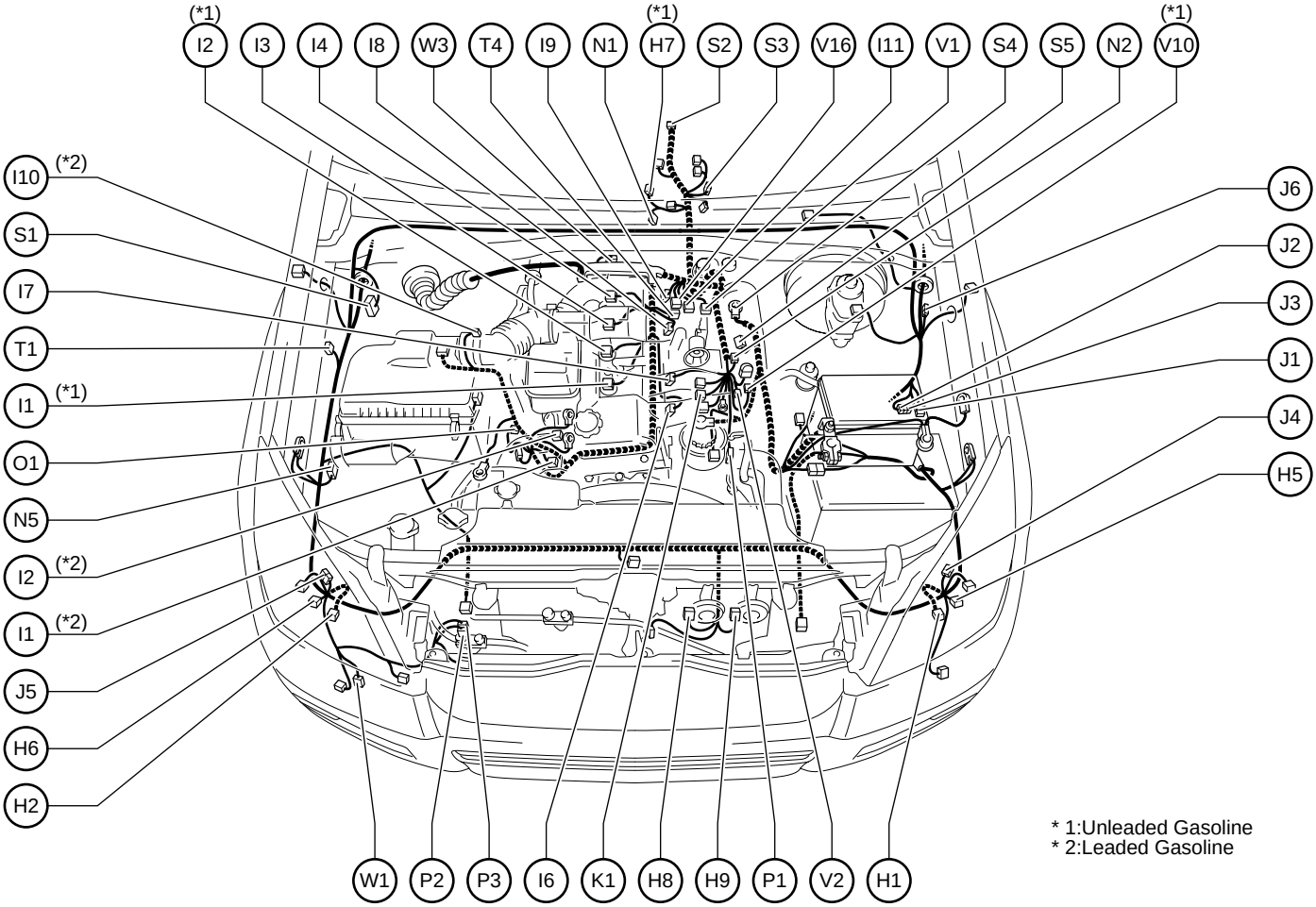

H 1 Headlight Beam Level Control Actuator LH
H 2 Headlight Beam Level Control Actuator RH
H 5 Headlight LH
H 6 Headlight RH
H 7 Heated Oxygen Sensor
H 8 Horn (High)
H 9 Horn (Low)

I 1 Ignition Coil and Igniter No.1
I 2 Ignition Coil and Igniter No.2
I 3 Ignition Coil and Igniter No.3
I 4 Ignition Coil and Igniter No.4
I 6 Injector No.1
I 7 Injector No.2
I 8 Injector No.3
I 9 Injector No.4
I 10 Intake Air Temp. Sensor
I 11 ISC Valve

J 1 Junction Connector
J 2 Junction Connector
J 3 Junction Connector
J 4 Junction Connector
J 5 Junction Connector
J 6 Junction Connector

K 1 Knock Sensor

N 1 Neutral Start SW
N 2 Noise Filter
N 5 Noise Filter (Condenser Fan)

O 1 Oil Pressure SW

P 1 Power Steering Oil Pressure SW
P 2 Pressure SW
P 3 Pressure SW

S 1 Skid Control ECU with Actuator
S 2 Speed Sensor (Combination Meter)
S 3 Speed Sensor (ECT)
S 4 Starter
S 5 Starter

T 1 Theft Deterrent Horn
T 4 Throttle Position Sensor

V 1 Vacuum Sensor
V 2 Variable Resistor
V 10 VSV (EVAP)
V 16 VSV (EGR)

W 1 Washer Motor
W 3 Water Temp. Sensor

Position of Parts in Engine Compartment

[LHD : 1KD–FTV]

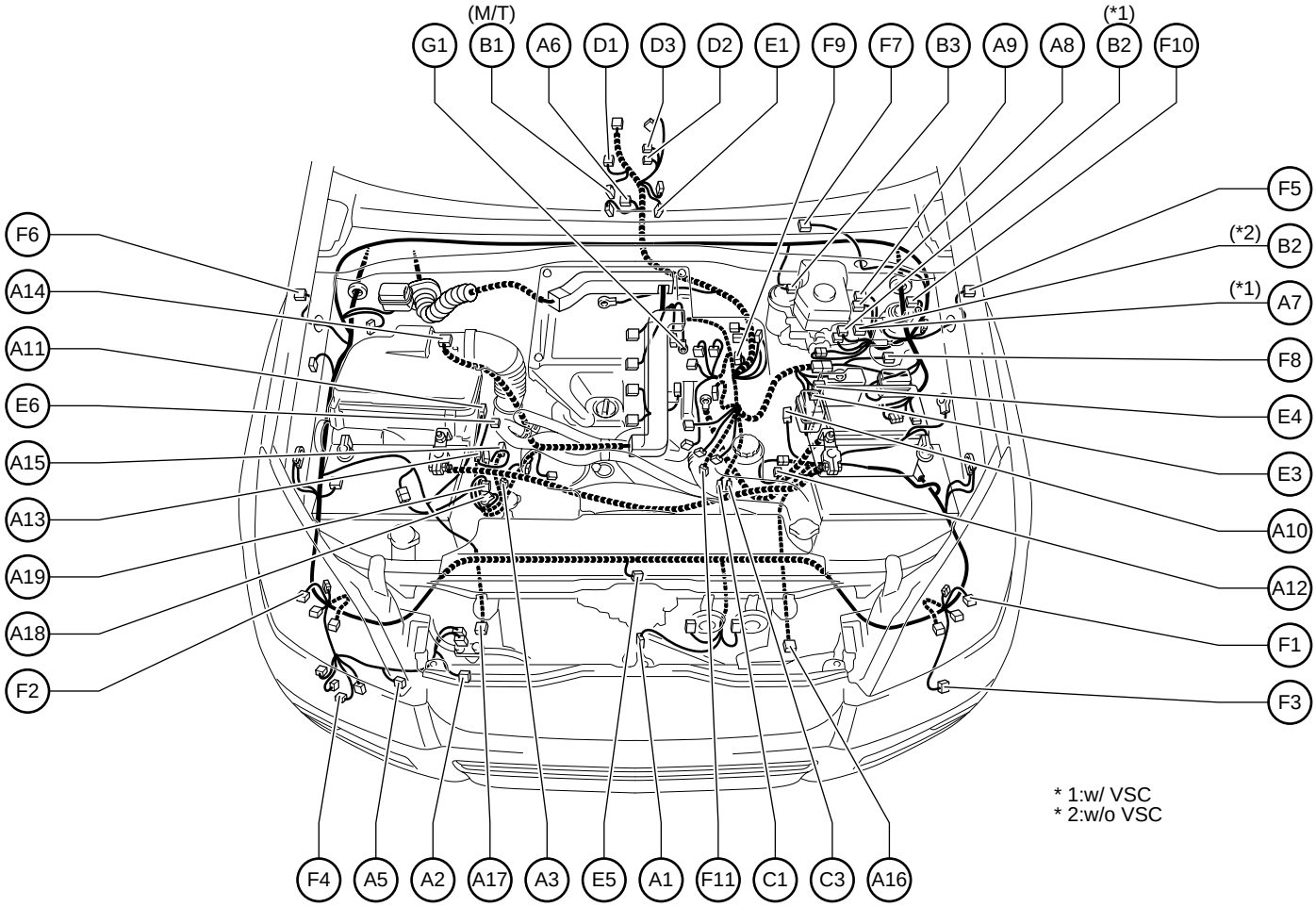

A 1 A/C Ambient Temp. Sensor
A 2 A/C Condenser Fan Motor
A 3 A/C Lock Sensor
A/C Magnetic Clutch
A 5 A/C Magnetic Valve
A 6 A/T Oil Temp. Sensor
A 7 ABS & BA & TRC & VSC Actuator
A 8 ABS & BA & TRC & VSC Actuator
A 9 ABS & BA & TRC & VSC Actuator
A 10 ABS Speed Sensor Front LH
A 11 ABS Speed Sensor Front RH
A 12 Absorber Control Actuator Front LH
A 13 Absorber Control Actuator Front RH
A 14 Air Flow Meter
A 15 Air Vent Control Servo Motor
A 16 Airbag Sensor Front LH
A 17 Airbag Sensor Front RH
A 18 Alternator
A 19 Alternator

B 1 Back–Up Light SW
B 2 Brake Fluid Level Warning SW
B 3 Brake Vacuum Warning SW

C 1 Camshaft Position Sensor
C 3 Crankshaft Position Sensor

D 1 Detection SW (Transfer 4WD Position)
D 2 Detection SW (Transfer L4 Position)
D 3 Detection SW (Transfer Neutral Position)

E 1 ECT Solenoid
E 3 Electronic Driver Unit
E 4 Electronic Driver Unit
E 5 Engine Hood Courtesy SW
E 6 Engine Oil Level Sensor

F 1 Front Clearance Light LH
Front Turn Signal Light LH
F 2 Front Clearance Light RH
Front Turn Signal Light RH
F 3 Front Fog Light LH
F 4 Front Fog Light RH
F 5 Front Side Turn Signal Light LH
F 6 Front Side Turn Signal Light RH
F 7 Front Wiper Motor
F 8 Fuel Heater
F 9 Fuel Pressure Sensor
F 10 Fuel Sedimentary SW
F 11 Fuel Temp. Sensor

G 1 Glow Plug

Position of Parts in Engine Compartment

[LHD : 1KD–FTV]

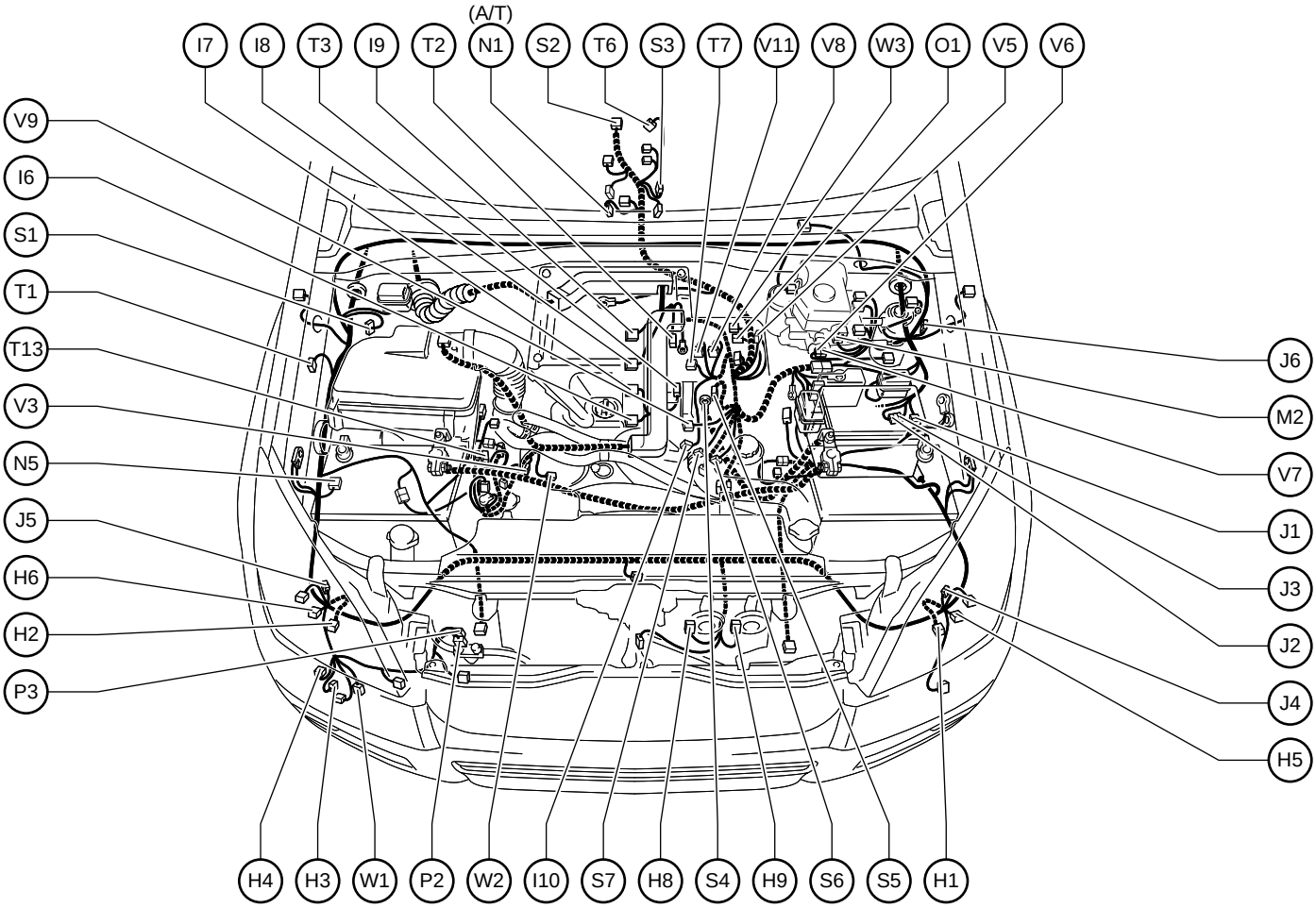

H 1 Headlight Beam Level Control Actuator LH
H 2 Headlight Beam Level Control Actuator RH
H 3 Headlight Cleaner Motor
H 4 Headlight Cleaner Relay
H 5 Headlight LH
H 6 Headlight RH
H 8 Horn (High)
H 9 Horn (Low)

I 6 Injector No.1
I 7 Injector No.2
I 8 Injector No.3
I 9 Injector No.4
I 10 Intake Air Temp. Sensor

J 1 Junction Connector
J 2 Junction Connector
J 3 Junction Connector
J 4 Junction Connector
J 5 Junction Connector
J 6 Junction Connector

M 2 Master Cylinder Pressure Sensor

N 1 Neutral Start SW
N 5 Noise Filter (Condenser Fan)

O 1 Oil Pressure SW

P 2 Pressure SW
P 3 Pressure SW

S 1 Skid Control ECU with Actuator
S 2 Speed Sensor (Combination Meter)
S 3 Speed Sensor (ECT)
S 4 Starter
S 5 Starter
S 6 Suction Control Valve No.1
S 7 Suction Control Valve No.2

T 1 Theft Deterrent Horn
T 2 Throttle Control Motor
T 3 Throttle Open SW
T 6 Transfer Actuator
T 7 Turbo Pressure Sensor
T 13 Turbo Charger Conpensate Resistor

V 3 Viscous Heater Magnetic Clutch
V 5 VRV (EGR)
V 6 VSC Check Connector
V 7 VSC Check Connector
V 8 VSV (EGR Cut)
V 9 VSV (Engine Mount)
V 11 VSV (Pressure Charge Valve)

W 1 Washer Motor
W 2 Water Temp. Sender
W 3 Water Temp. Sensor

Position of Parts in Engine Compartment

[LHD : 1KZ–TE]

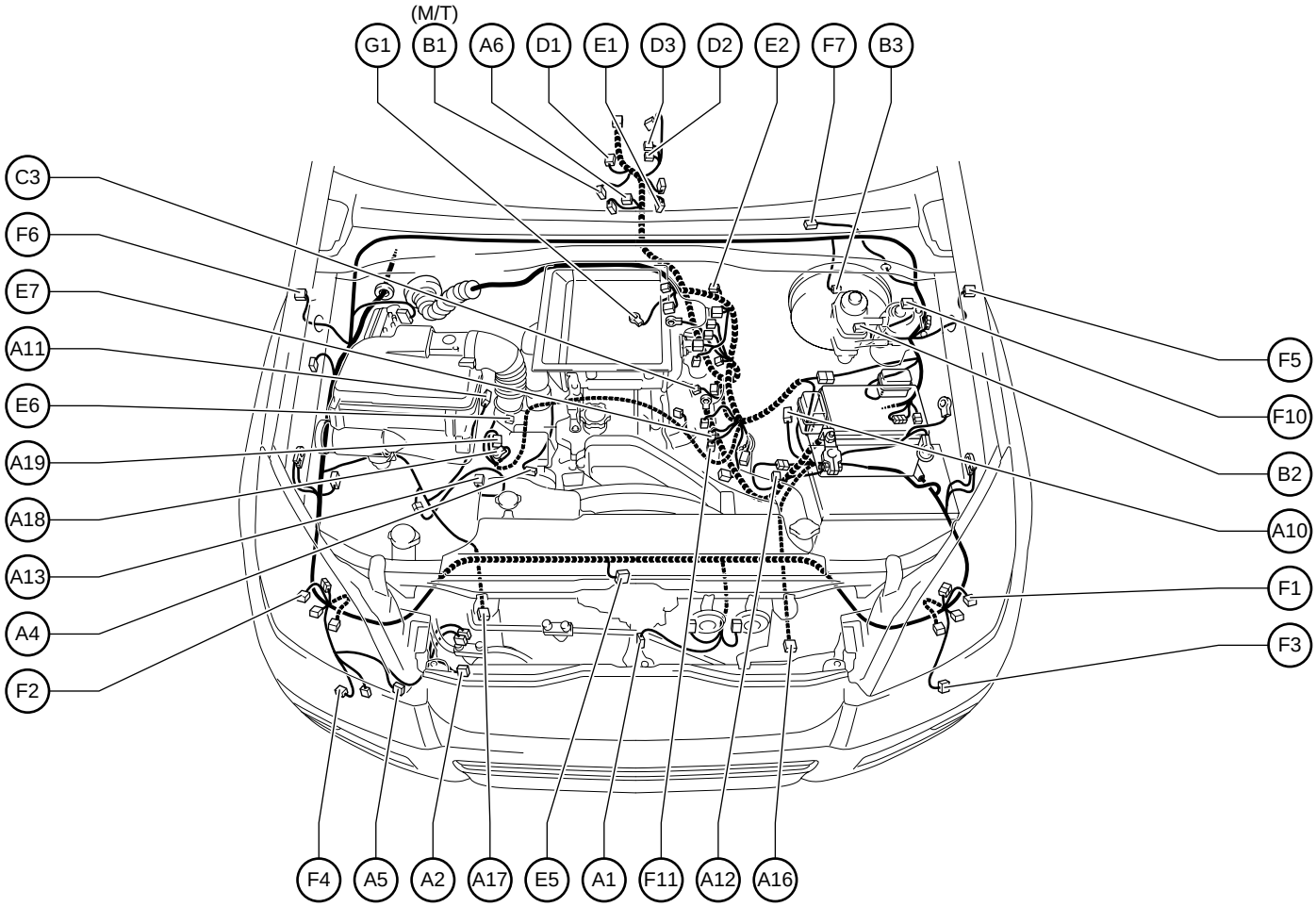

A 1 A/C Ambient Temp. Sensor
A 2 A/C Condenser Fan Motor
A 4 A/C Magnetic Clutch
A 5 A/C Magnetic Valve
A 6 A/T Oil Temp. Sensor
A 10 ABS Speed Sensor Front LH
A 11 ABS Speed Sensor Front RH
A 12 Absorber Control Actuator Front LH
A 13 Absorber Control Actuator Front RH
A 16 Airbag Sensor Front LH
A 17 Airbag Sensor Front RH
A 18 Alternator
A 19 Alternator

B 1 Back–Up Light SW
B 2 Brake Fluid Level Warning SW
B 3 Brake Vacuum Warning SW

C 3 Crankshaft Position Sensor

D 1 Detection SW (Transfer 4WD Position)
D 2 Detection SW (Transfer L4 Position)
D 3 Detection SW (Transfer Neutral Position)

E 1 ECT Solenoid
E 2 EGR Valve Position Sensor
E 5 Engine Hood Courtesy SW
E 6 Engine Oil Level Sensor
E 7 Engine Speed Sensor

F 1 Front Clearance Light LH
Front Turn Signal Light LH
F 2 Front Clearance Light RH
Front Turn Signal Light RH
F 3 Front Fog Light LH
F 4 Front Fog Light RH
F 5 Front Side Turn Signal Light LH
F 6 Front Side Turn Signal Light RH
F 7 Front Wiper Motor
F 10 Fuel Sedimentary SW
F 11 Fuel Temp. Sensor

G 1 Glow Plug

Position of Parts in Engine Compartment

[LHD : 1KZ–TE]

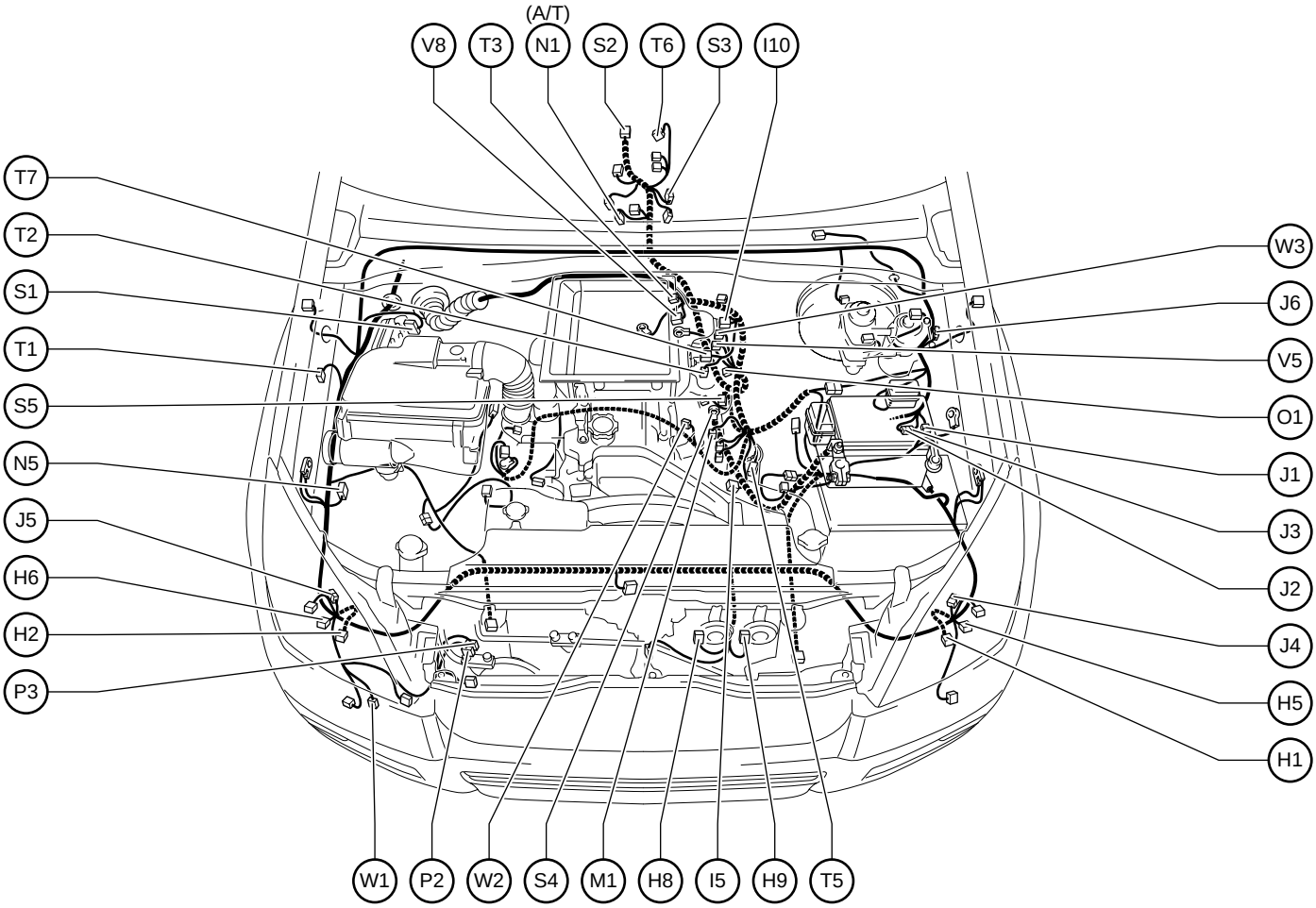

H 1 Headlight Beam Level Control Actuator LH
H 2 Headlight Beam Level Control Actuator RH
H 5 Headlight LH
H 6 Headlight RH
H 8 Horn (High)
H 9 Horn (Low)

I 5 Injection Pump
I 10 Intake Air Temp. Sensor

J 1 Junction Connector
J 2 Junction Connector
J 3 Junction Connector
J 4 Junction Connector
J 5 Junction Connector
J 6 Junction Connector

M 1 Magnetic Spill Valve

N 1 Neutral Start SW
N 5 Noise Filter (Condenser Fan)

O 1 Oil Pressure SW

P 2 Pressure SW
P 3 Pressure SW

S 1 Skid Control ECU with Actuator
S 2 Speed Sensor (Combination Meter)
S 3 Speed Sensor (ECT)
S 4 Starter
S 5 Starter

T 1 Theft Deterrent Horn
T 2 Throttle Control Motor
T 3 Throttle Open SW
T 5 Timing Control Valve
T 6 Transfer Actuator
T 7 Turbo Pressure Sensor

V 5 VRV (EGR)
V 8 VSV (EGR Cut)

W 1 Washer Motor
W 2 Water Temp. Sender
W 3 Water Temp. Sensor

Position of Parts in Engine Compartment

[LHD : 5L–E]

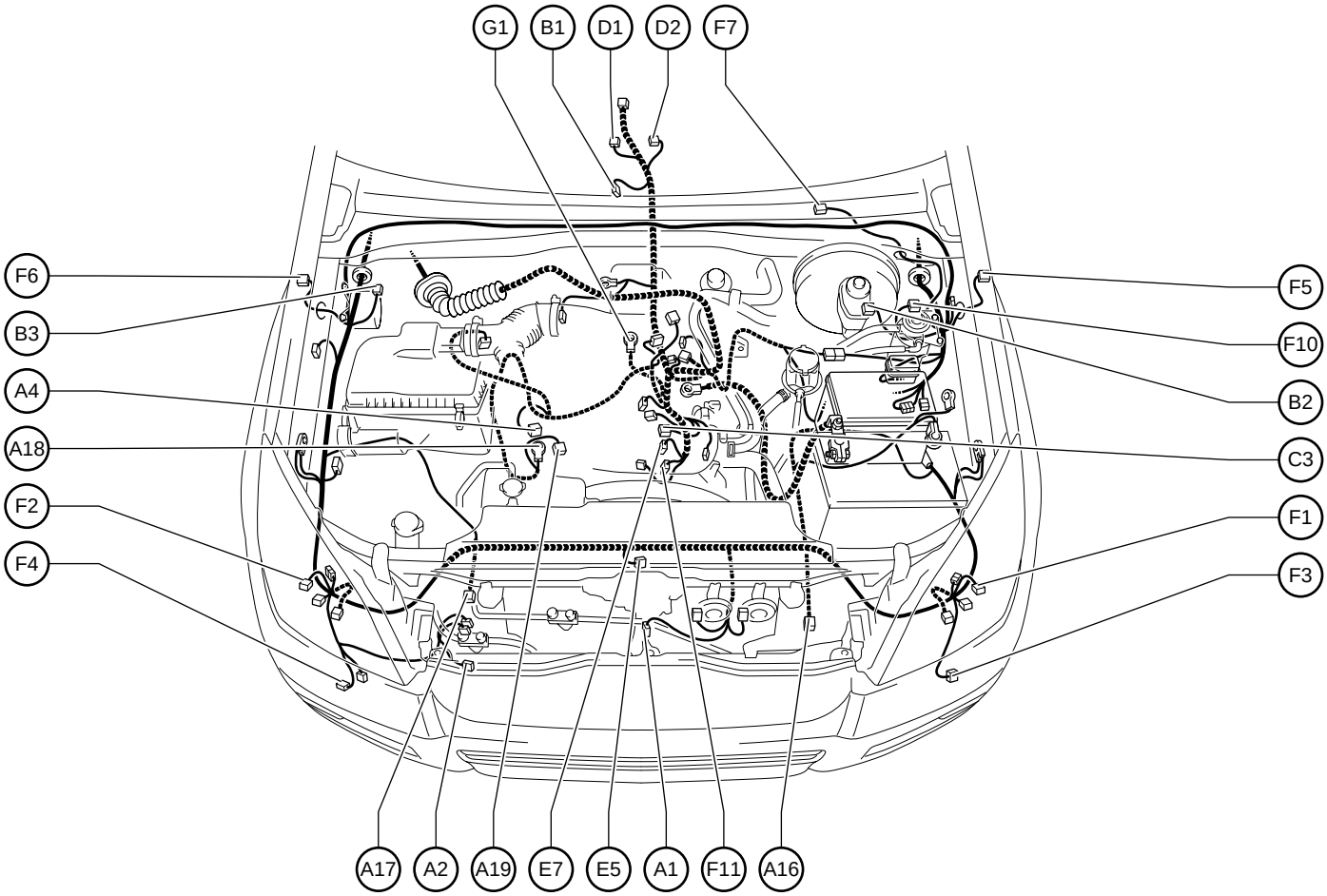

A 1 A/C Ambient Temp. Sensor
A 2 A/C Condenser Fan Motor
A 4 A/C Magnetic Clutch
A16 Airbag Sensor Front LH
A17 Airbag Sensor Front RH
A18 Alternator
A19 Alternator

B 1 Back–Up Light SW
B 2 Brake Fluid Level Warning SW
B 3 Brake Vacuum Warning SW

C 3 Crankshaft Position Sensor

D 1 Detection SW (Transfer 4WD Position)
D 2 Detection SW (Transfer L4 Position)

E 5 Engine Hood Courtesy SW
E 7 Engine Speed Sensor

F 1 Front Clearance Light LH
Front Turn Signal Light LH
F 2 Front Clearance Light RH
Front Turn Signal Light RH
F 3 Front Fog Light LH
F 4 Front Fog Light RH
F 5 Front Side Turn Signal Light LH
F 6 Front Side Turn Signal Light RH
F 7 Front Wiper Motor
F10 Fuel Sedimentary SW
F11 Fuel Temp. Sensor

G 1 Glow Plug

Position of Parts in Engine Compartment

[LHD : 5L–E]

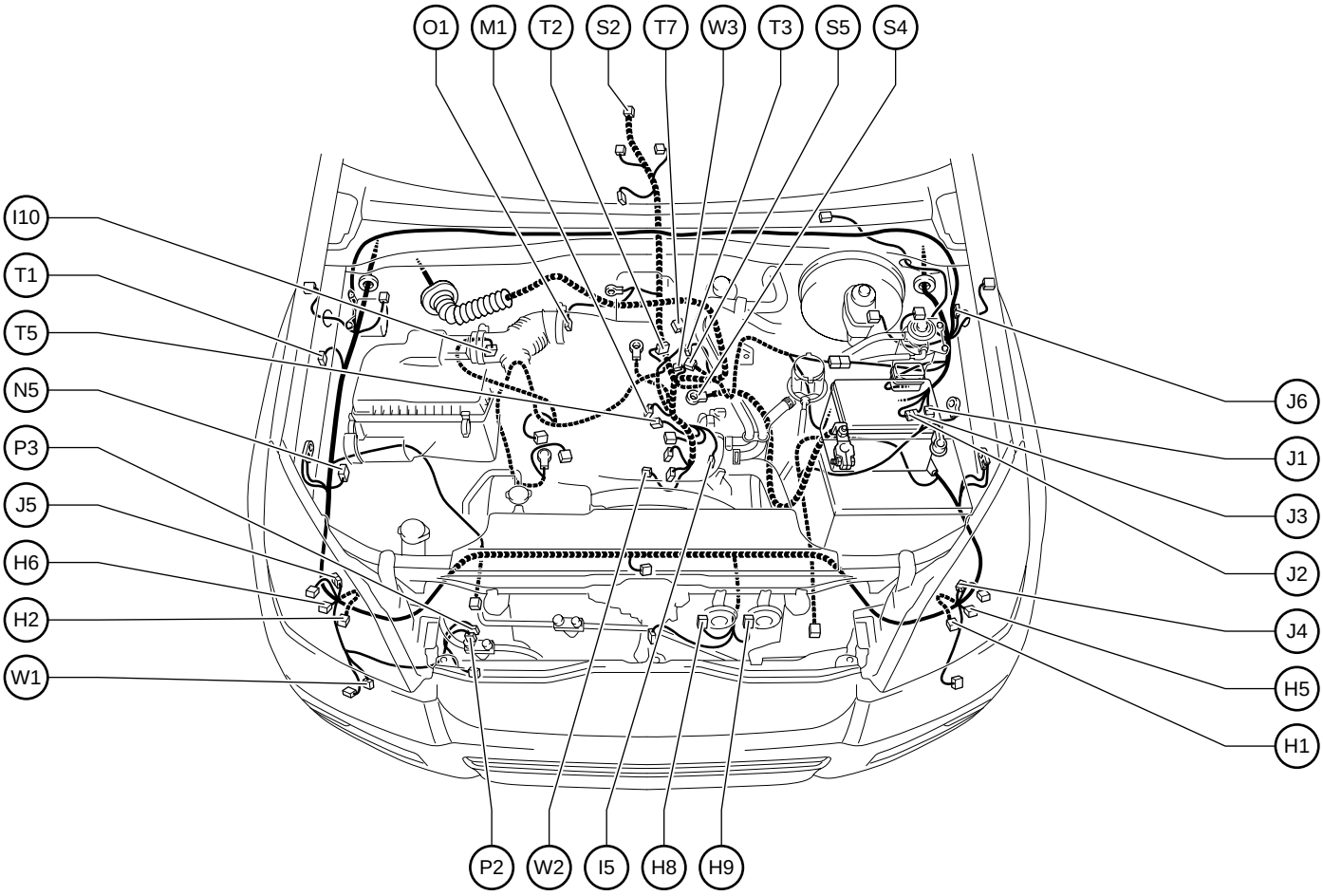

H 1 Headlight Beam Level Control Actuator LH
H 2 Headlight Beam Level Control Actuator RH
H 5 Headlight LH
H 6 Headlight RH
H 8 Horn (High)
H 9 Horn (Low)

I 5 Injection Pump
I 10 Intake Air Temp. Sensor

J 1 Junction Connector
J 2 Junction Connector
J 3 Junction Connector
J 4 Junction Connector
J 5 Junction Connector
J 6 Junction Connector

M 1 Magnetic Spill Valve

N 5 Noise Filter (Condenser Fan)

O 1 Oil Pressure SW

P 2 Pressure SW
P 3 Pressure SW

S 2 Speed Sensor (Combination Meter)
S 4 Starter
S 5 Starter

T 1 Theft Deterrent Horn
T 2 Throttle Control Motor
T 3 Throttle Open SW
T 5 Timing Control Valve
T 7 Turbo Pressure Sensor

W 1 Washer Motor
W 2 Water Temp. Sender
W 3 Water Temp. Sensor

Position of Parts in Instrument Panel

[LHD]

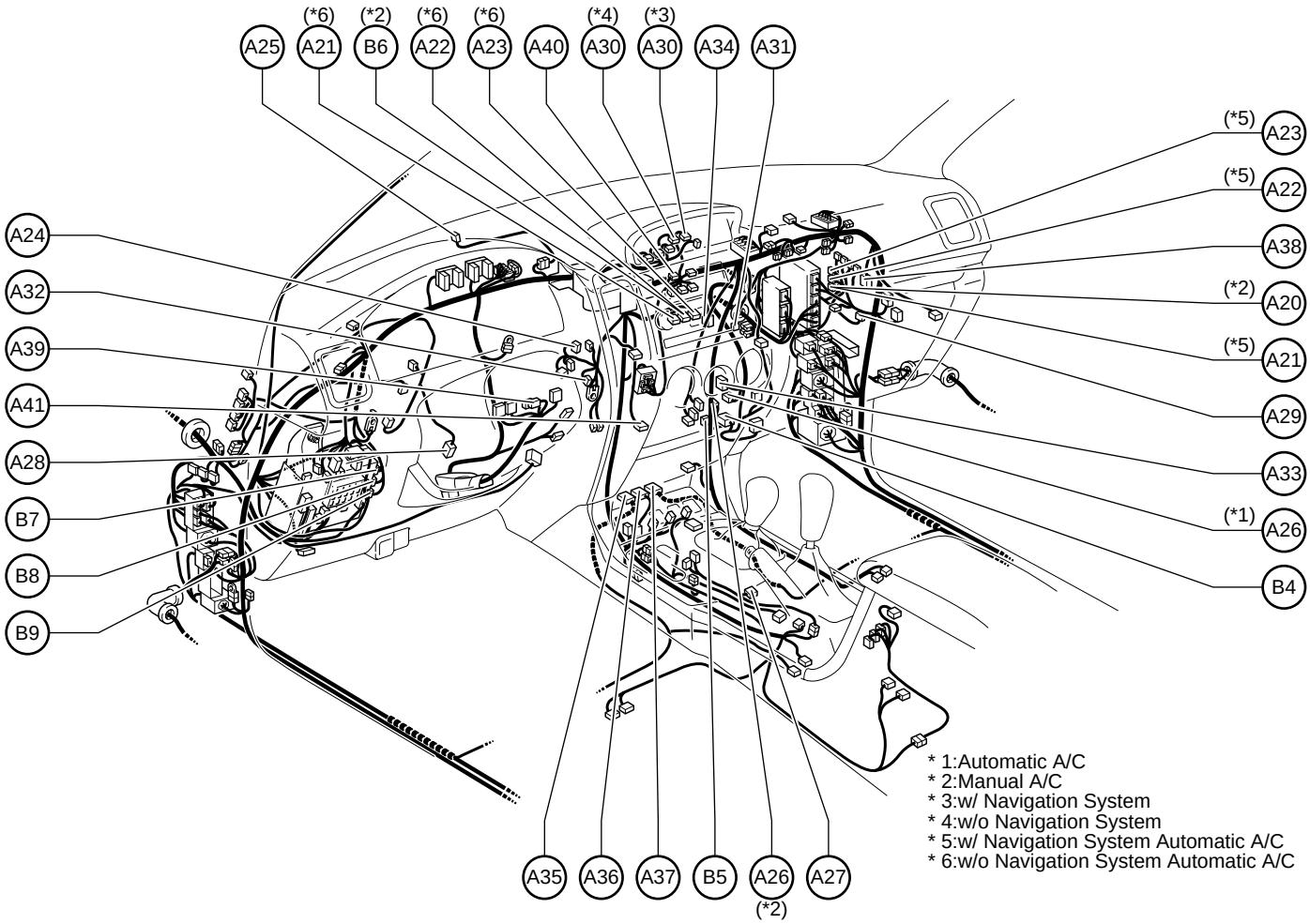

A20 A/C Amplifier
A21 A/C Control Assembly (w/o Navigation System)
A/C ECU (w/ Navigation System)
A22 A/C Control Assembly (w/o Navigation System)
A/C ECU (w/ Navigation System)
A23 A/C Control Assembly (w/o Navigation System)
A/C ECU (w/ Navigation System)
A24 A/C Room Temp. Sensor
A25 A/C Solar Sensor
A26 A/C Thermistor
A27 A/T Shift Indicator
A28 Accel Position Sensor
A29 Acceleration Control Sensor Front
A30 Accessory Meter
A31 Air Inlet Control Servo Motor
A32 Air Mix Control Servo Motor LH
A33 Air Mix Control Servo Motor RH
A34 Air Vent Mode Control Servo Motor
A35 Airbag Sensor Assembly
A36 Airbag Sensor Assembly
A37 Airbag Sensor Assembly
A38 Airbag Squib (Front Passenger Airbag Assembly)
A39 Airbag Squib (Steering Wheel Pad)
A40 Antenna Amplifier
A41 Ashtray Illumination

B 4 Blower Motor Linear Controller
B 5 Blower Resistor
B 6 Blower SW
B 7 Body ECU
B 8 Body ECU
B 9 Body ECU

Position of Parts in Instrument Panel

[LHD]

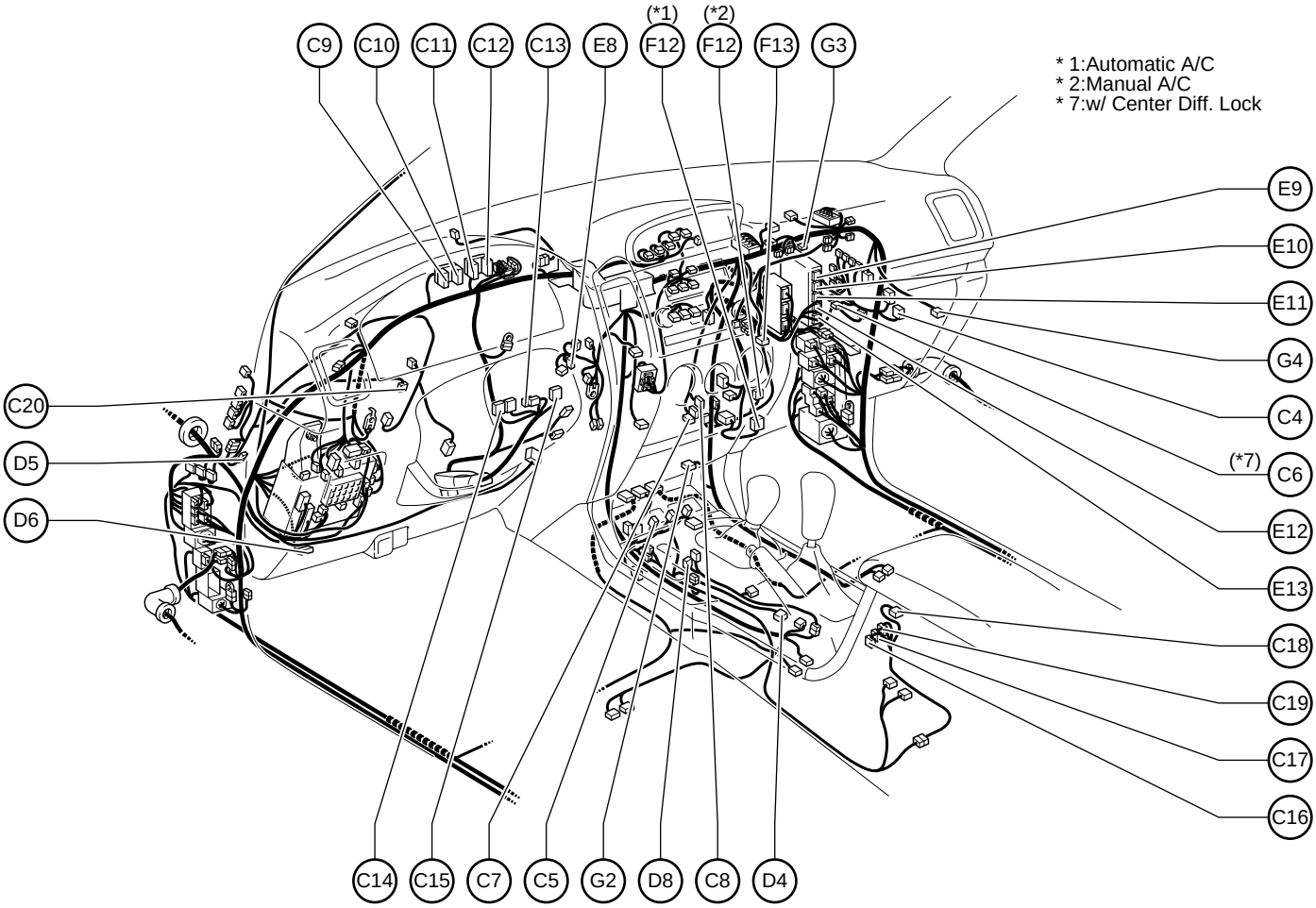

C 4 CD Automatic Changer
C 5 Center Diff. Lock Control SW
C 6 Center Diff. Lock ECU
C 7 Cigarette Lighter
C 8 Cigarette Lighter Illumination
C 9 Combination Meter
C10 Combination Meter
C11 Combination Meter
C12 Combination Meter
C13 Combination SW
C14 Combination SW
C15 Combination SW
C16 Cool Box Amplifier
C17 Cool Box Motor
C18 Cool Box SW
C19 Cool Box Thermistor
C20 Cruise Control Clutch SW

D 4 Deceleration Sensor
D 5 Diode (Front Fog Light)
D 6 DLC3
D 8 Downhill Assist Control SW

E 8 ECT Pattern Select SW
E 9 Engine and ECT ECU (A/T)
Engine ECU (M/T)
E10 Engine and ECT ECU (A/T)
Engine ECU (M/T)
E11 Engine and ECT ECU (A/T)
Engine ECU (M/T)
E12 Engine and ECT ECU (A/T)
Engine ECU (M/T)
E13 Engine and ECT ECU (A/T)
Engine ECU (M/T)

F12 Front Blower Motor
F13 Front Passenger's Seat Belt Warning Light

G 2 Gateway ECU
G 3 Glove Box Light
G 4 Glove Box Light SW

Position of Parts in Instrument Panel

[LHD]

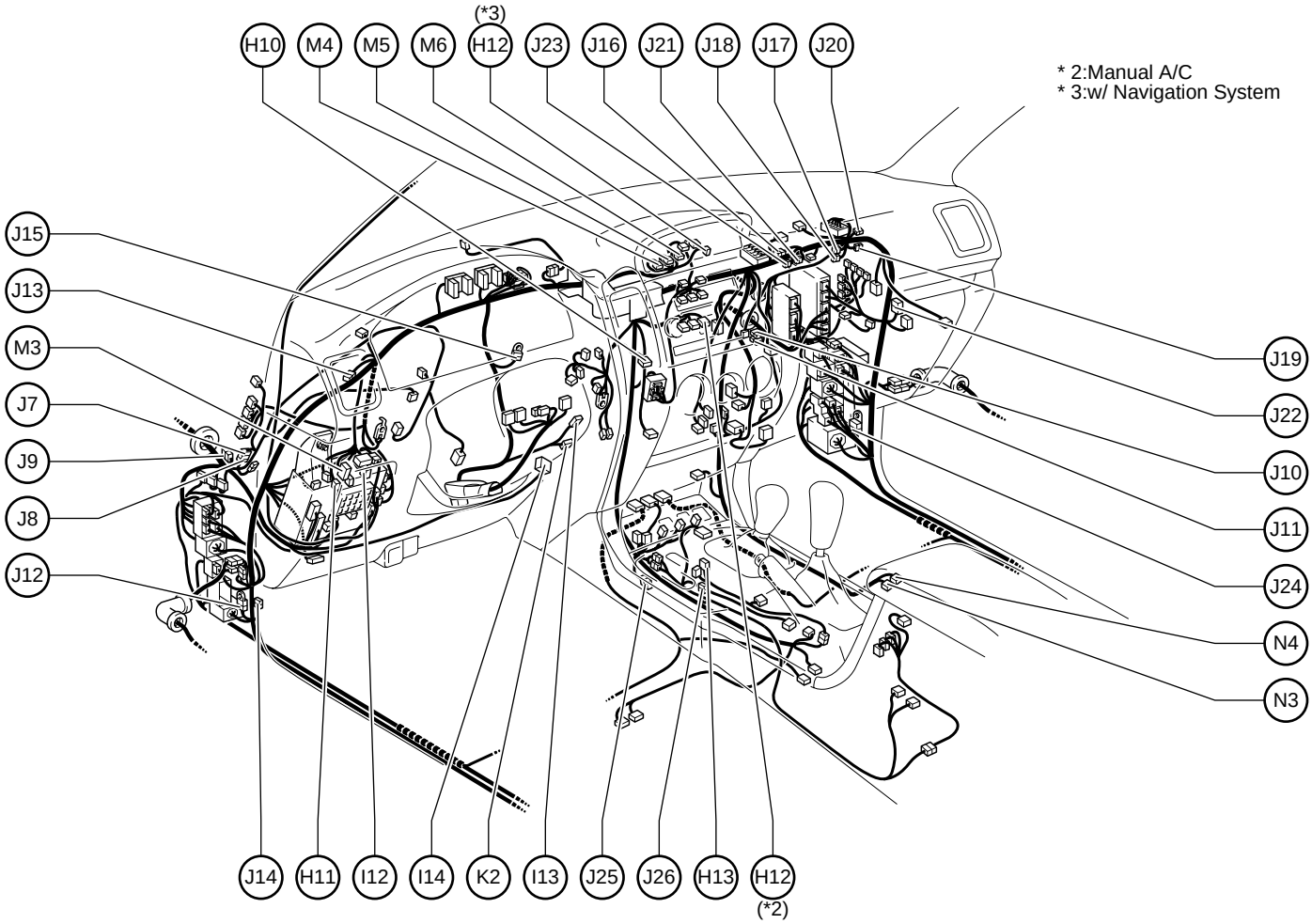

H10 Hazard SW
H11 Headlight Beam Level Control SW
H12 Heater Control SW
H13 Height Control and Suspension SW

I 12 Idle−Up SW
I 13 Ignition Key Cylinder Light
Transponder Key Amplifier
I 14 Ignition SW

J 7 Junction Connector
J 8 Junction Connector
J 9 Junction Connector
J 10 Junction Connector
J 11 Junction Connector
J 12 Junction Connector
J 13 Junction Connector
J 14 Junction Connector
J 15 Junction Connector
J 16 Junction Connector
J 17 Junction Connector
J 18 Junction Connector
J 19 Junction Connector
J 20 Junction Connector
J 21 Junction Connector
J 22 Junction Connector
J 23 Junction Connector
J 24 Junction Connector
J 25 Junction Connector
J 26 Junction Connector

K 2 Key Interlock Solenoid
Unlock Warning SW

M 3 Mirror Heater SW
M 4 Multi−Display
M 5 Multi−Display
M 6 Multi−Display

N 3 Navigation ECU
N 4 Navigation ECU

Position of Parts in Instrument Panel

[LHD]

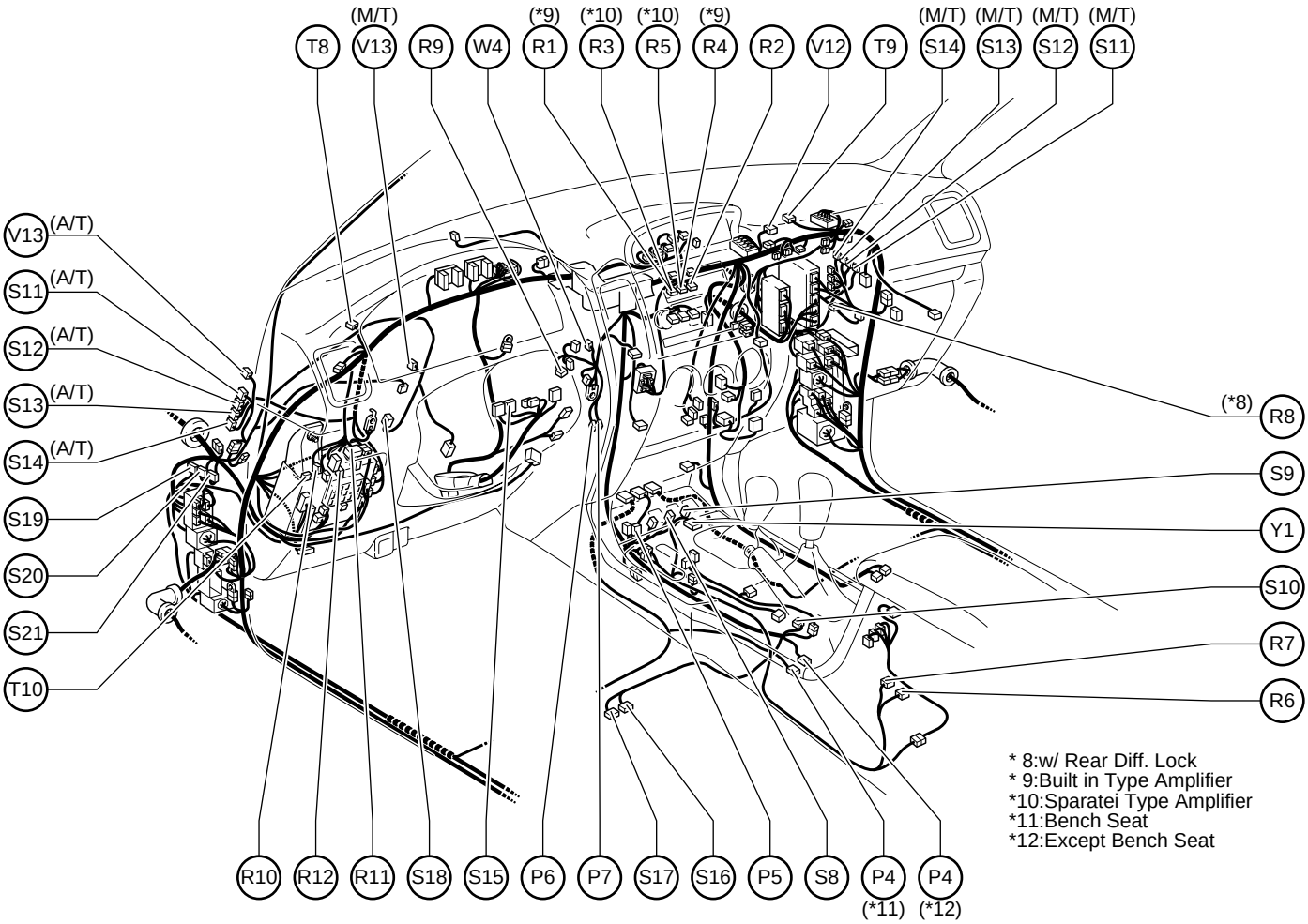

P 4 Parking Brake SW
P 5 Power Outlet (Front)
P 6 PTC Heater
P 7 PTC Heater

R 1 Radio and Player
R 2 Radio and Player
R 3 Radio and Player
R 4 Radio and Player
R 5 Radio and Player
R 6 Rear Blower SW
R 7 Rear Cooler Control SW
R 8 Rear Diff. Lock Control ECU
R 9 Rear Diff. Lock SW
R10 Rear Fog Light SW
R11 Remote Control Mirror SW
R12 Rheostat

S 8 Seat Heater SW Front LH
S 9 Seat Heater SW Front RH
S10 Shift Lock Control ECU
S11 Skid Control ECU
S12 Skid Control ECU
S13 Skid Control ECU
S14 Skid Control ECU
S15 Steering Sensor
S16 Stereo Component Amplifier
S17 Stereo Component Amplifier
S18 Stop Light SW
S19 Suspension Control ECU
S20 Suspension Control ECU
S21 Suspension Control ECU

T 8 Theft Deterrent ECU
T 9 Transponder Key Computer
T10 Turn Signal Flasher

V12 Viscous Heater Amplifier
V13 VSC Warning Buzzer

W 4 Water Temp. Sensor (A/C)

Y 1 Yaw Rate Sensor

Position of Parts in Body

[LHD : 5–Door]

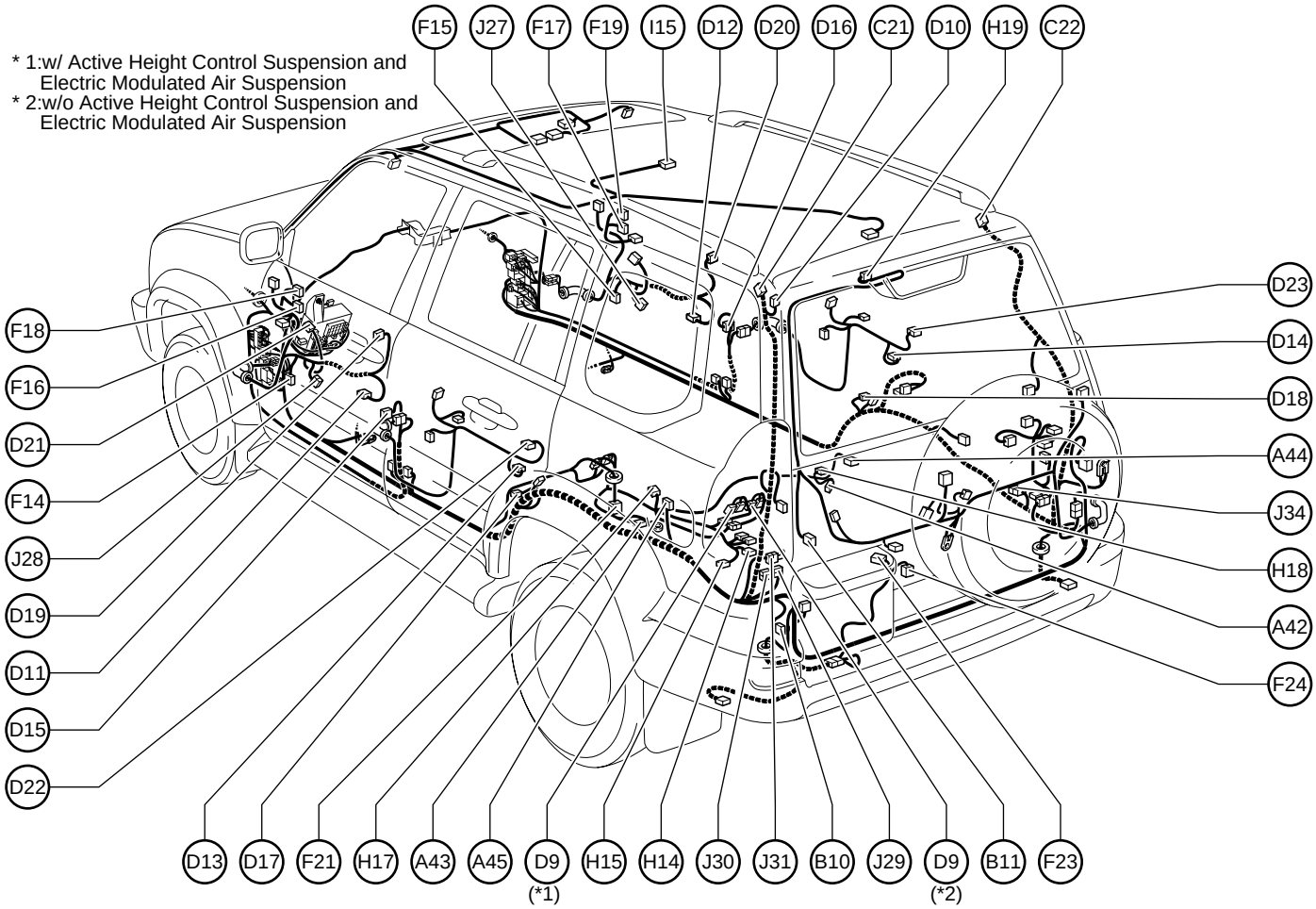

A42 ABS Speed Sensor Rear
A43 Absorber Control Actuator Rear LH
A44 Absorber Control Actuator Rear RH
A45 Acceleration Control Sensor Rear

B10 Back Door Courtesy SW
B11 Back Door Key Lock and Unlock SW
Back Door Lock Motor
Back Door Unlock Detection SW

C21 Curtain Shield Airbag Squib LH
C22 Curtain Shield Airbag Squib RH

D 9 Detection SW (Rear Diff. Lock)
D10 Door Control Receiver
D11 Door Courtesy Light Front LH
D12 Door Courtesy Light Front RH
D13 Door Courtesy Light Rear LH
D14 Door Courtesy Light Rear RH
D15 Door Courtesy SW Front LH
D16 Door Courtesy SW Front RH
D17 Door Courtesy SW Rear LH
D18 Door Courtesy SW Rear RH
D19 Door Key Lock and Unlock SW Front LH
Door Lock Motor Front LH
Door Unlock Detection SW Front LH
D20 Door Key Lock and Unlock SW Front RH
Door Lock Motor Front RH
Door Unlock Detection SW Front RH
D21 Door Lock Control SW
Power Window Master SW
D22 Door Lock Motor Rear LH
Door Unlock Detection SW Rear LH
D23 Door Lock Motor Rear RH
Door Unlock Detection SW Rear RH

F 14 Front Door Speaker LH
F 15 Front Door Speaker RH
F 16 Front Door Squawker LH
F 17 Front Door Squawker RH
F 18 Front Door Tweeter Speaker LH
F 19 Front Door Tweeter Speaker RH
F 21 Fuel Pump and Fuel Sender (Gasoline)
Fuel Sender (Diesel)
F 23 Fuel Sender (Sub)
F 24 Fuel Sender (Sub)

H14 Height Control Compressor
H15 Height Control Exhaust Valve
H17 Height Control Sensor Rear LH
H18 Height Control Sensor Rear RH
H19 High Mounted Stop Light

I 15 Interior Light

J 27 Junction Connector
J 28 Junction Connector
J 29 Junction Connector
J 30 Junction Connector
J 31 Junction Connector
J 34 Junction Connector

Position of Parts in Body

[LHD : 5–Door]

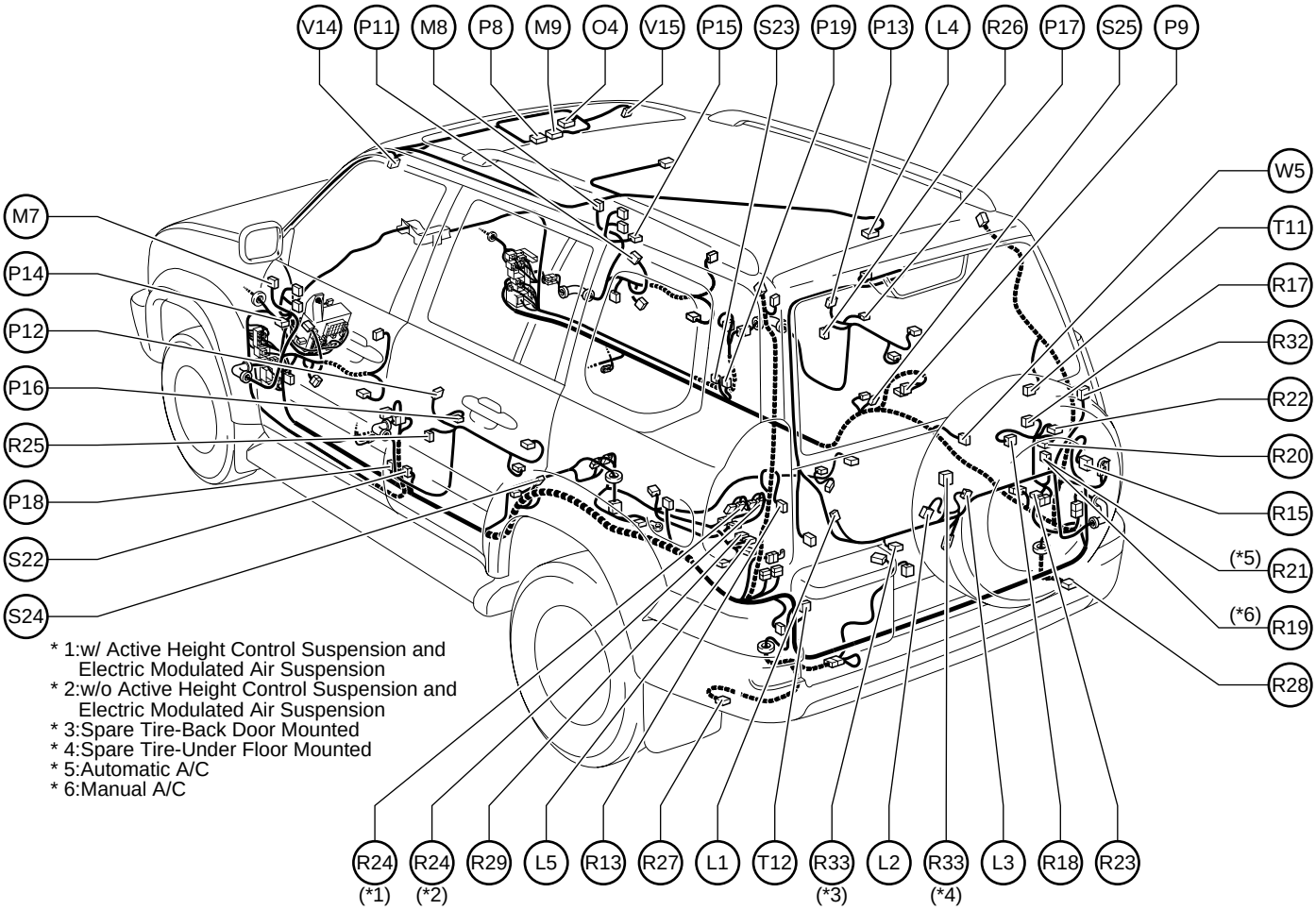

L 1 License Plate Light
L 2 License Plate Light LH
L 3 License Plate Light RH
L 4 Luggage Compartment Light
L 5 Low Pressure Tank Valve

M 7 Mirror Heater LH
Remote Control Mirror LH
M 8 Mirror Heater RH
Remote Control Mirror RH
M 9 Moon Roof Control ECU and Motor

O 4 Overhead J/B

P 8 Personal Light
P 9 Power Outlet (Rear)
P 11 Power Window Control SW Front RH
P 12 Power Window Control SW Rear LH
P 13 Power Window Control SW Rear RH
P 14 Power Window Motor Front LH
P 15 Power Window Motor Front RH
P 16 Power Window Motor Rear LH
P 17 Power Window Motor Rear RH
P 18 Pretensioner LH
P 19 Pretensioner RH

R 13 Rear Combination Light LH
R 15 Rear Combination Light RH
R 17 Rear Cooler Amplifier
R 18 Rear Cooler Blower Motor
R 19 Rear Cooler Blower Resistor
R 20 Rear Cooler Magnetic Valve
R 21 Rear Cooler Power Transistor
R 22 Rear Cooler Relay
R 23 Rear Cooler Thermistor
R 24 Rear Diff. Lock Motor
R 25 Rear Door Speaker LH
R 26 Rear Door Speaker RH
R 27 Rear Fog Light LH
R 28 Rear Fog Light RH
R 29 Rear Height Control Valve
R 32 Rear Window Defogger
R 33 Rear Wiper Motor

S 22 Side Airbag Sensor Front LH
S 23 Side Airbag Sensor Front RH
S 24 Side Airbag Sensor Rear LH
S 25 Side Airbag Sensor Rear RH

T 11 Theft Deterrent Siren
T 12 Trailer Socket

V 14 Vanity Light LH
V 15 Vanity Light RH

W 5 Woofer Speaker

Position of Parts in Body

[LHD : 3–Door]

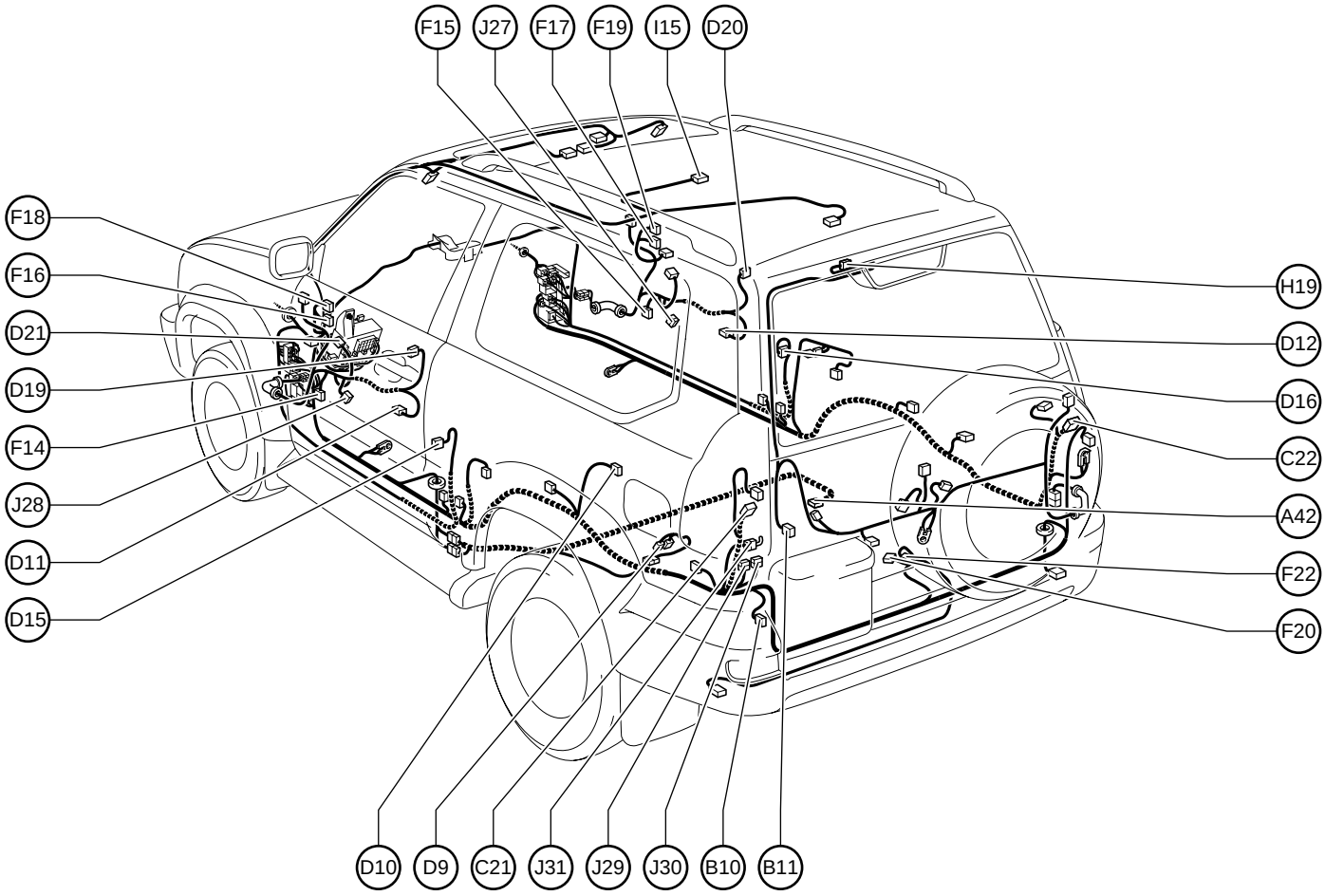

A 42 ABS Speed Sensor Rear

B 10 Back Door Courtesy SW
B 11 Back Door Key Lock and Unlock SW
Back Door Lock Motor
Back Door Unlock Detection SW

C21 Curtain Shield Airbag Squib LH
C22 Curtain Shield Airbag Squib RH

D 9 Detection SW (Rear Diff. Lock)
D 10 Door Control Receiver
D 11 Door Courtesy Light Front LH
D 12 Door Courtesy Light Front RH
D 15 Door Courtesy SW Front LH
D 16 Door Courtesy SW Front RH
D 19 Door Key Lock and Unlock SW Front LH
Door Lock Motor Front LH
Door Unlock Detection SW Front LH
D 20 Door Key Lock and Unlock SW Front RH
Door Lock Motor Front RH
Door Unlock Detection SW Front RH
D 21 Door Lock Control SW
Power Window Master SW

F 14 Front Door Speaker LH
F 15 Front Door Speaker RH
F 16 Front Door Squawker LH
F 17 Front Door Squawker RH
F 18 Front Door Tweeter Speaker LH
F 19 Front Door Tweeter Speaker RH
F 20 Fuel Pump
F 22 Fuel Sender

H 19 High Mounted Stop Light

I 15 Interior Light

J 27 Junction Connector
J 28 Junction Connector
J 29 Junction Connector
J 30 Junction Connector
J 31 Junction Connecto

Position of Parts in Body

[LHD : 3–Door]

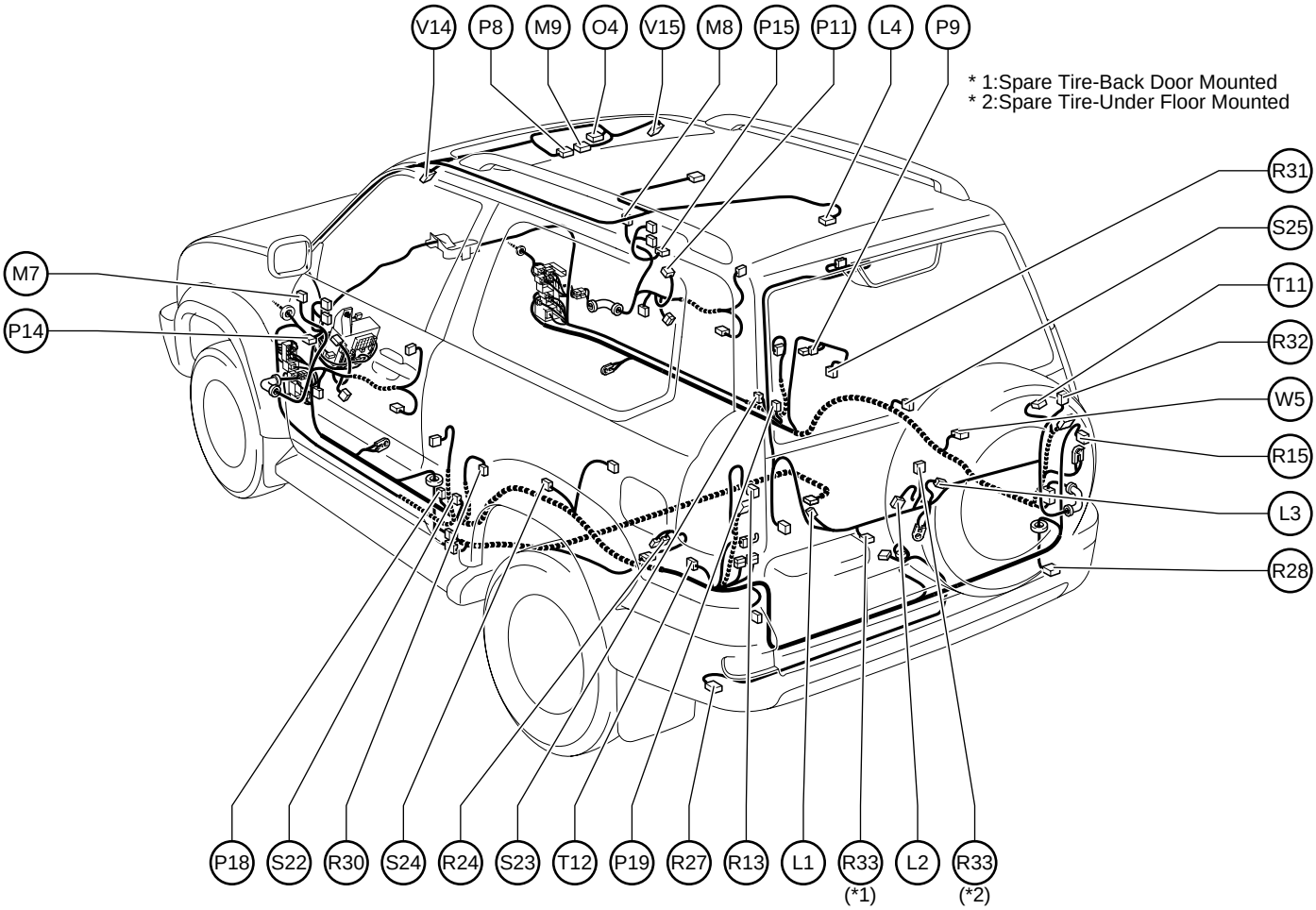

L 1 License Plate Light
L 2 License Plate Light LH
L 3 License Plate Light RH
L 4 Luggage Compartment Light

M 7 Mirror Heater LH
Remote Control Mirror LH
M 8 Mirror Heater RH
Remote Control Mirror RH
M 9 Moon Roof Control ECU and Motor

O 4 Overhead J/B

P 8 Personal Light
P 9 Power Outlet (Rear)
P 11 Power Window Control SW Front RH
P 14 Power Window Motor Front LH
P 15 Power Window Motor Front RH
P 18 Pretensioner LH
P 19 Pretensioner RH

R 13 Rear Combination Light LH
R 15 Rear Combination Light RH
R 24 Rear Diff. Lock Motor
R 27 Rear Fog Light LH
R 28 Rear Fog Light RH
R 30 Rear Speaker LH
R 31 Rear Speaker RH
R 32 Rear Window Defogger
R 33 Rear Wiper Motor

S 22 Side Airbag Sensor Front LH
S 23 Side Airbag Sensor Front RH
S 24 Side Airbag Sensor Rear LH
S 25 Side Airbag Sensor Rear RH

T 11 Theft Deterrent Siren
T 12 Trailer Socket

V 14 Vanity Light LH
V 15 Vanity Light RH

W 5 Woofer Speaker

Position of Parts in Seat

[LHD : 8Way Power Seat]

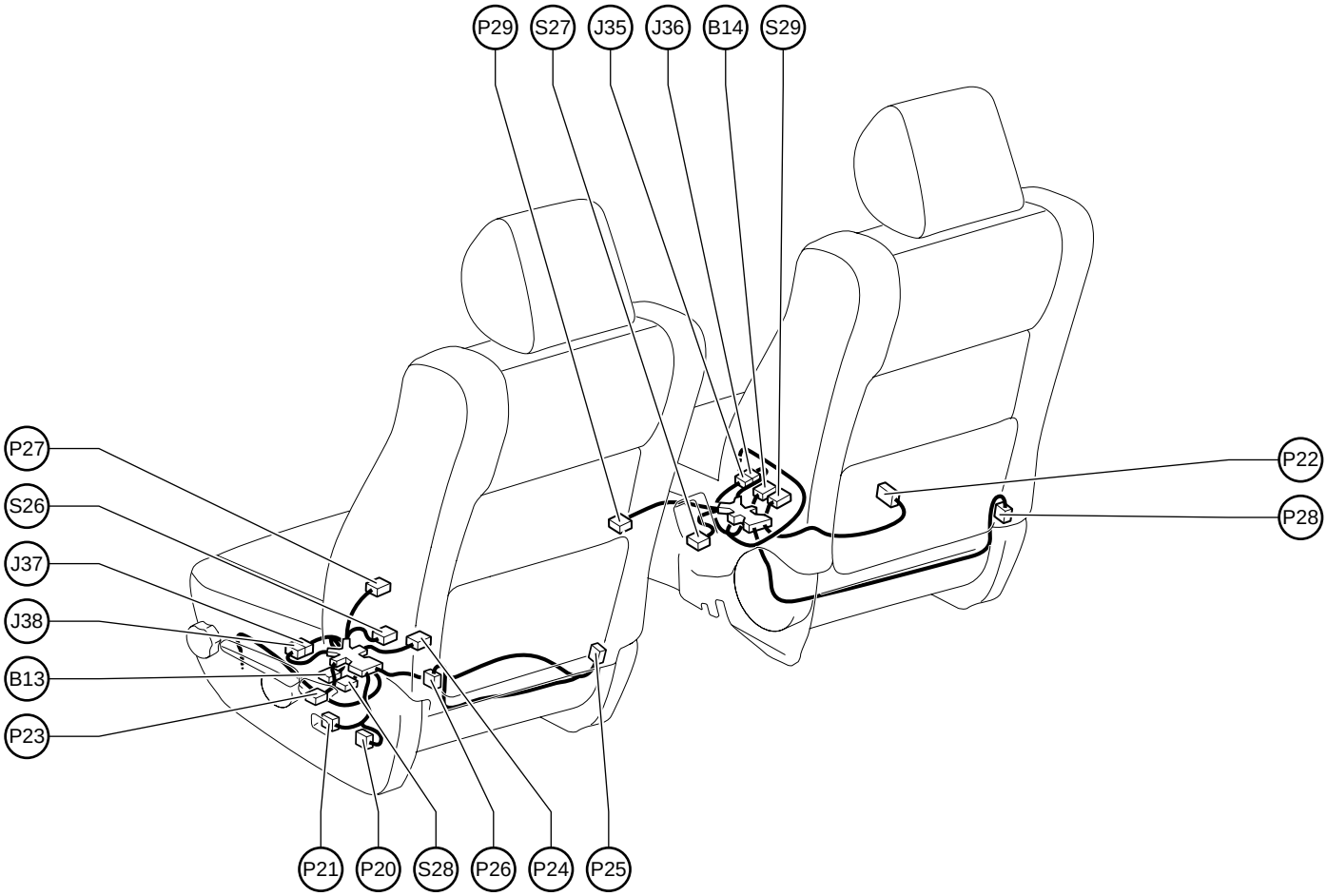

B13 Buckle SW LH
Seat Position Sensor
B14 Buckle SW RH
Occupant Detection Sensor

J 35 Junction Connector
J 36 Junction Connector
J 37 Junction Connector
J 38 Junction Connector

P20 Power Seat Control SW
(Driver's Seat Lumbar Support Control)
P21 Power Seat Control SW (Driver's Seat)
P22 Power Seat Control SW (Front Passenger's Seat)
P23 Power Seat Motor (Driver's Seat Front Vertical Control)
P24 Power Seat Motor (Driver's Seat Lifter Control)
P25 Power Seat Motor
(Driver's Seat Lumbar Support Control)
P26 Power Seat Motor (Driver's Seat Reclining Control)
P27 Power Seat Motor (Driver's Seat Slide Control)
P28 Power Seat Motor
(Front Passenger's Seat Reclining Control)
P29 Power Seat Motor
(Front Passenger's Seat Slide Control)

S26 Seat Heater (Driver's Seat)
S27 Seat Heater (Front Passenger's Seat)
S28 Side Airbag Squib LH
S29 Side Airbag Squib RH

Position of Parts in Seat

[LHD : Except 8Way Power Seat]

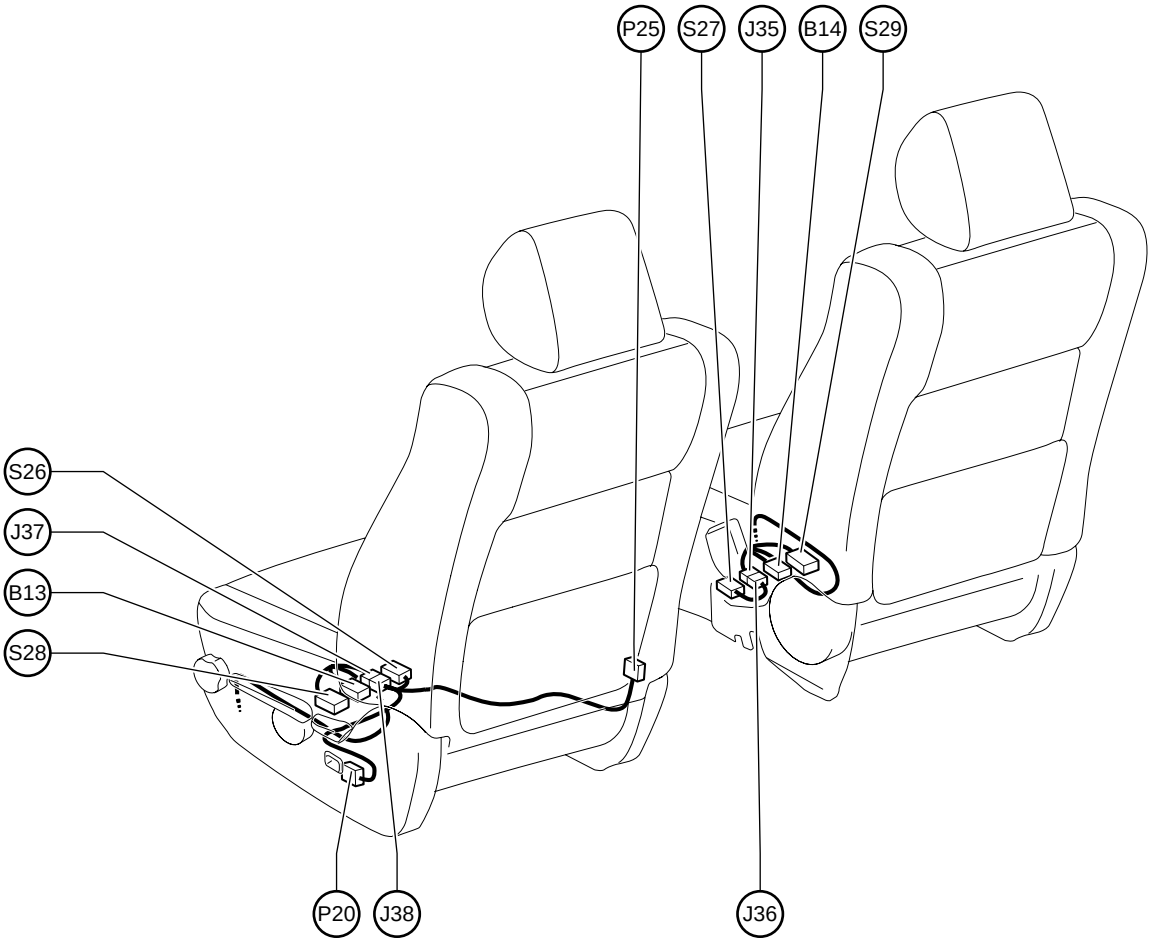

B13 Buckle SW LH
Seat Position Sensor
B14 Buckle SW RH
Occupant Detection Sensor

J 35 Junction Connector
J 36 Junction Connector
J 37 Junction Connector
J 38 Junction Connector

P20 Power Seat Control SW
(Driver's Seat Lumbar Support Control)
P25 Power Seat Motor
(Driver's Seat Lumbar Support Control)

S26 Seat Heater (Driver's Seat)
S27 Seat Heater (Front Passenger's Seat)
S28 Side Airbag Squib LH
S29 Side Airbag Squib RH

Position of Parts in Engine Compartment

[RHD : 1GR–FE]

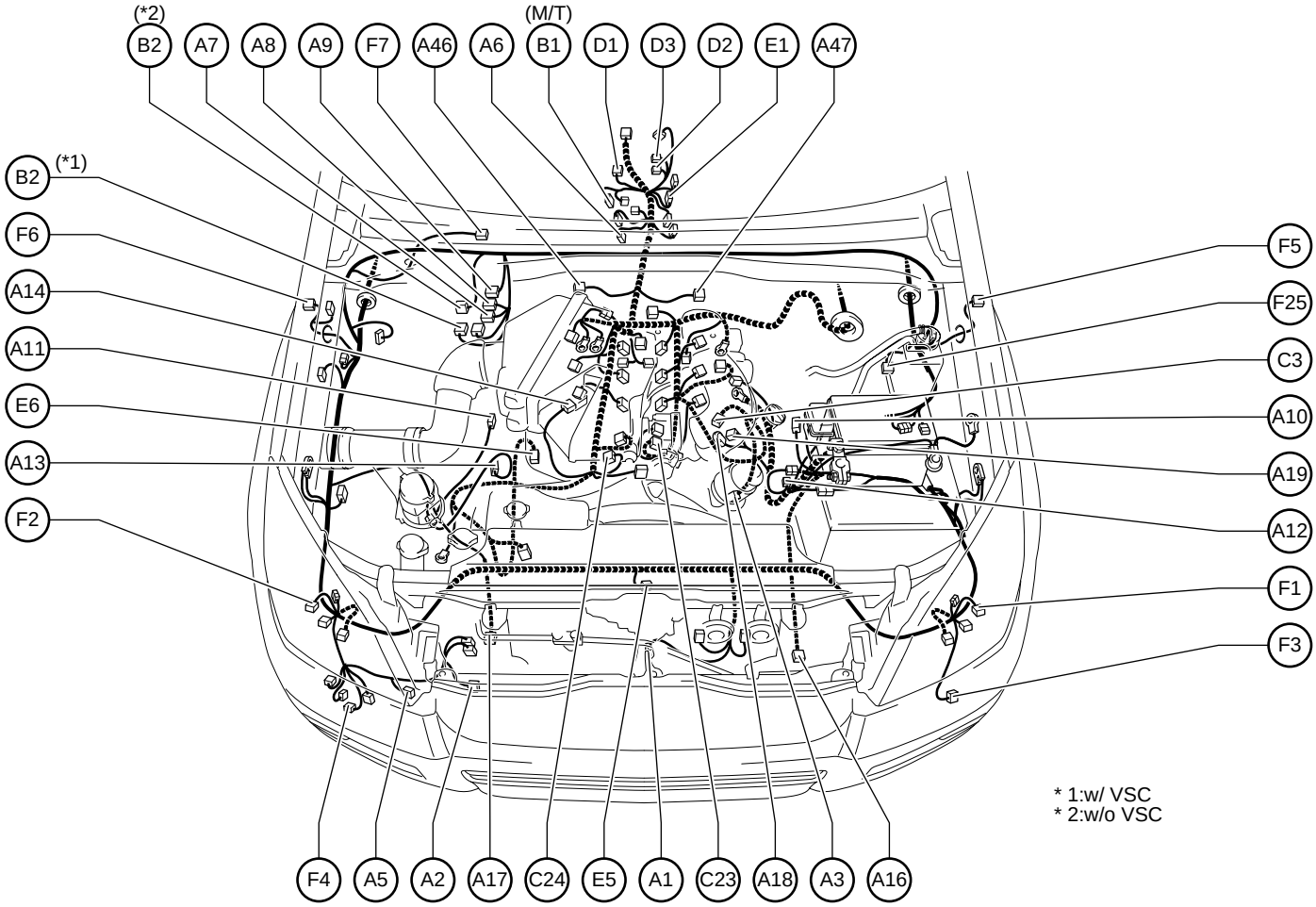

A 1 A/C Ambient Temp. Sensor
A 2 A/C Condenser Fan Motor
A 3 A/C Lock Sensor
A/C Magnetic Clutch
A 5 A/C Magnetic Valve
A 6 A/T Oil Temp. Sensor
A 7 ABS & BA & TRC & VSC Actuator
A 8 ABS & BA & TRC & VSC Actuator
A 9 ABS & BA & TRC & VSC Actuator
A 10 ABS Speed Sensor Front LH
A 11 ABS Speed Sensor Front RH
A 12 Absorber Control Actuator Front LH
A 13 Absorber Control Actuator Front RH
A 14 Air Flow Meter
A 16 Airbag Sensor Front LH
A 17 Airbag Sensor Front RH
A 18 Alternator
A 19 Alternator
A 46 Air Fuel Ratio Sensor (Bank 1 Sensor 1)
A 47 Air Fuel Ratio Sensor (Bank 2 Sensor 1)

B 1 Back–Up Light SW
B 2 Brake Fluid Level Warning SW

C 3 Crankshaft Position Sensor
C 23 Camshaft Timing Oil Control Valve LH
C 24 Camshaft Timing Oil Control Valve RH

D 1 Detection SW (Transfer 4WD Position)
D 2 Detection SW (Transfer L4 Position)
D 3 Detection SW (Transfer Neutral Position)

E 1 ECT Solenoid
E 5 Engine Hood Courtesy SW
E 6 Engine Oil Level Sensor

F 1 Front Clearance Light LH
Front Turn Signal Light LH
F 2 Front Clearance Light RH
Front Turn Signal Light RH
F 3 Front Fog Light LH
F 4 Front Fog Light RH
F 5 Front Side Turn Signal Light LH
F 6 Front Side Turn Signal Light RH
F 7 Front Wiper Motor
F 25 Fuel Pump Resistor

Position of Parts in Engine Compartment

[RHD : 1GR–FE]

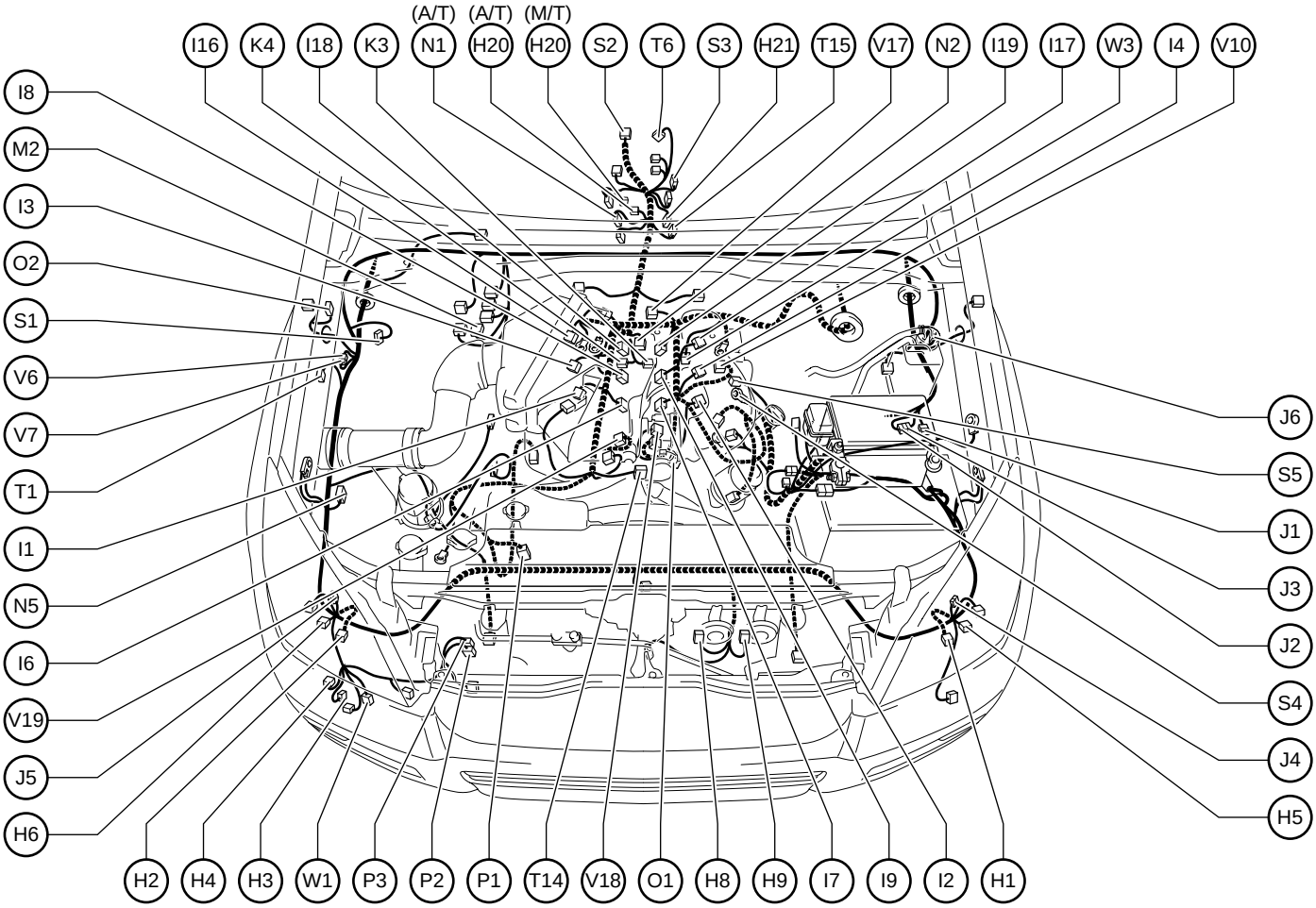

H 1 Headlight Beam Level Control Actuator LH
H 2 Headlight Beam Level Control Actuator RH
H 3 Headlight Cleaner Motor
H 4 Headlight Cleaner Relay
H 5 Headlight LH
H 6 Headlight RH
H 8 Horn (High)
H 9 Horn (Low)
H 20 Heated Oxygen Sensor (Bank 1 Sensor 2)
H 21 Heated Oxygen Sensor (Bank 2 Sensor 2)

I 1 Ignition Coil and Igniter No.1
I 2 Ignition Coil and Igniter No.2
I 3 Ignition Coil and Igniter No.3
I 4 Ignition Coil and Igniter No.4
I 6 Injector No.1
I 7 Injector No.2
I 8 Injector No.3
I 9 Injector No.4
I 16 Ignition Coil and Igniter No.5
I 17 Ignition Coil and Igniter No.6
I 18 Injector No.5
I 19 Injector No.6

J 1 Junction Connector
J 2 Junction Connector
J 3 Junction Connector
J 4 Junction Connector
J 5 Junction Connector
J 6 Junction Connector

K 3 Knock Sensor LH
K 4 Knock Sensor RH

M 2 Master Cylinder Pressure Sensor

N 1 Neutral Start SW
N 2 Noise Filter
N 5 Noise Filter (Condenser Fan)

O 1 Oil Pressure SW
O 2 Option Conector (Keyless Buzzer)

P 1 Power Steering Oil Pressure SW
P 2 Pressure SW
P 3 Pressure SW

S 1 Skid Control ECU with Actuator
S 2 Speed Sensor (Combination Meter)
S 3 Speed Sensor (ECT)
S 4 Starter
S 5 Starter

T 1 Theft Deterrent Horn
T 6 Transfer Actuator
T 14 Throttle Control Motor
Throttle Position Sensor
T 15 Turbine Speed Sensor

V 6 VSC Check Connector
V 7 VSC Check Connector
V 10 VSV (EVAP)
V 17 VSV (ACIS)
V 18 VVT Sensor LH
V 19 VVT Sensor RH

W 1 Washer Motor
W 3 Water Temp. Sensor

Position of Parts in Engine Compartment

[RHD : 3RZ–FE]

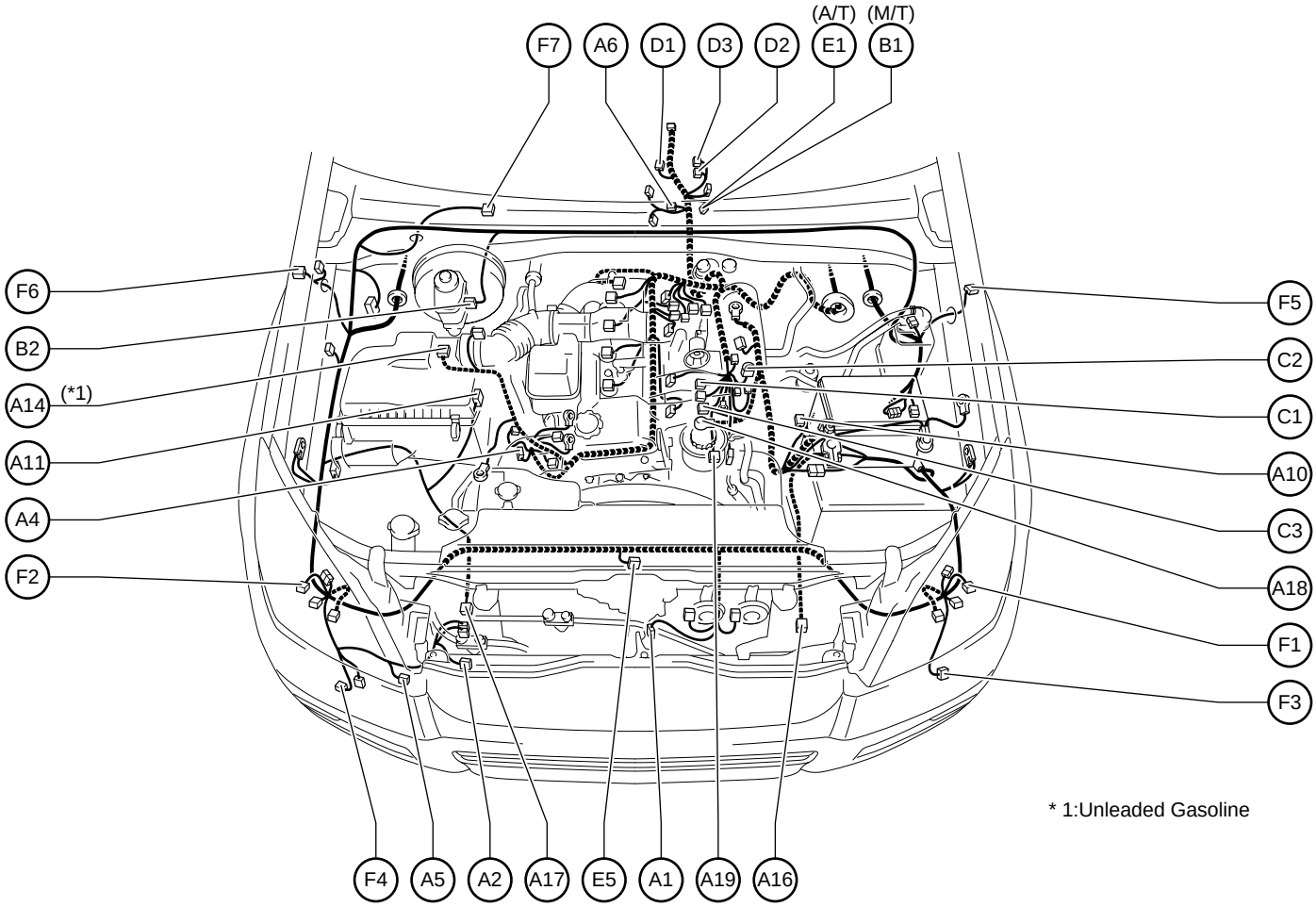

A 1 A/C Ambient Temp. Sensor
A 2 A/C Condenser Fan Motor
A 4 A/C Magnetic Clutch
A 5 A/C Magnetic Valve
A 6 A/T Oil Temp. Sensor
A10 ABS Speed Sensor Front LH
A11 ABS Speed Sensor Front RH
A14 Air Flow Meter
A16 Airbag Sensor Front LH
A17 Airbag Sensor Front RH
A18 Alternator
A19 Alternator

B 1 Back–Up Light SW
B 2 Brake Fluid Level Warning SW

C 1 Camshaft Position Sensor
C 2 Check Connector
C 3 Crankshaft Position Sensor

D 1 Detection SW (Transfer 4WD Position)
D 2 Detection SW (Transfer L4 Position)
D 3 Detection SW (Transfer Neutral Position)

E 1 ECT Solenoid
E 5 Engine Hood Courtesy SW

F 1 Front Clearance Light LH
Front Turn Signal Light LH
F 2 Front Clearance Light RH
Front Turn Signal Light RH
F 3 Front Fog Light LH
F 4 Front Fog Light RH
F 5 Front Side Turn Signal Light LH
F 6 Front Side Turn Signal Light RH
F 7 Front Wiper Motor

Position of Parts in Engine Compartment

[RHD : 3RZ–FE]

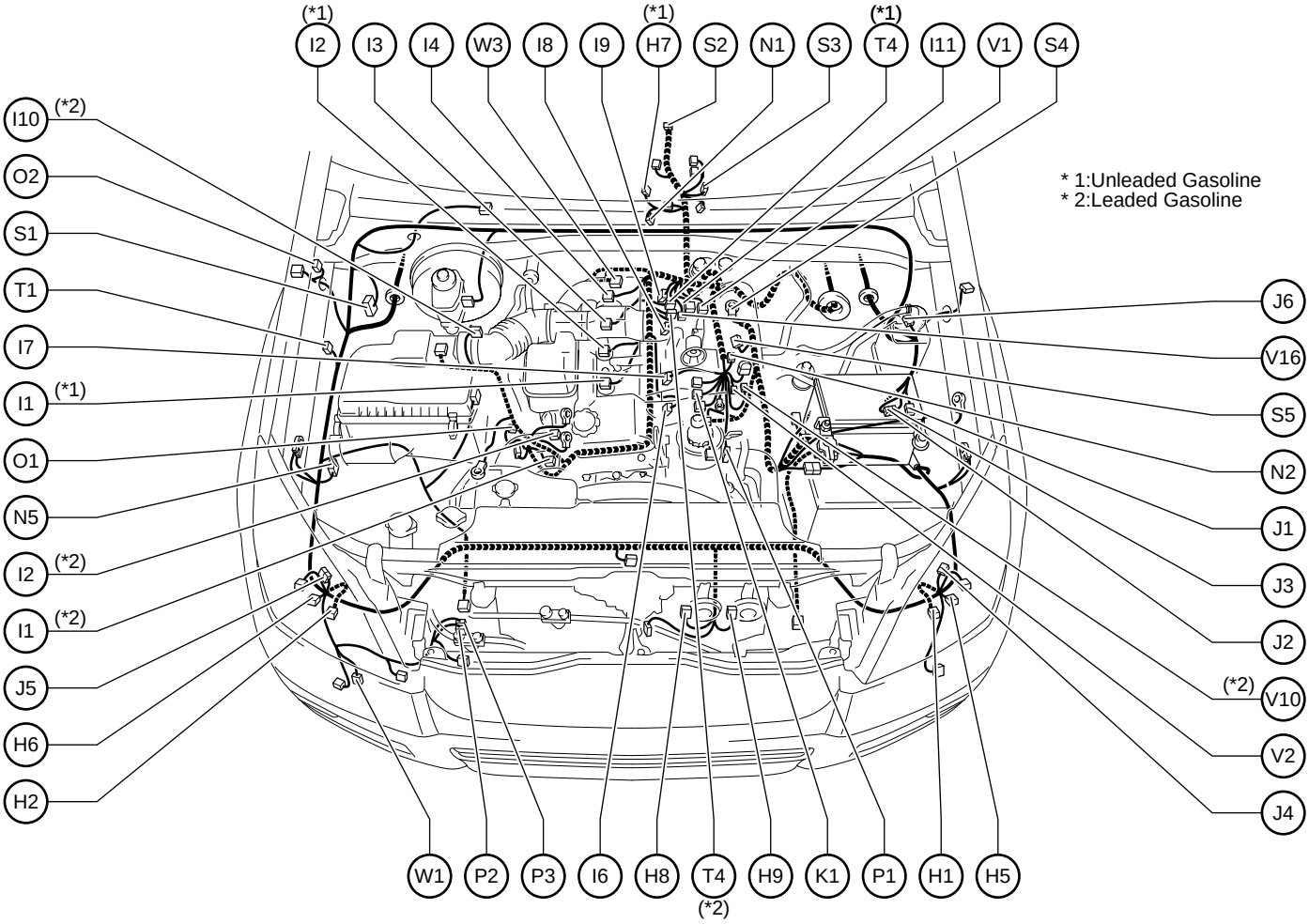

H 1 Headlight Beam Level Control Actuator LH
H 2 Headlight Beam Level Control Actuator RH
H 5 Headlight LH
H 6 Headlight RH
H 7 Heated Oxygen Sensor
H 8 Horn (High)
H 9 Horn (Low)

I 1 Ignition Coil and Igniter No.1
I 2 Ignition Coil and Igniter No.2
I 3 Ignition Coil and Igniter No.3
I 4 Ignition Coil and Igniter No.4
I 6 Injector No.1
I 7 Injector No.2
I 8 Injector No.3
I 9 Injector No.4
I 10 Intake Air Temp. Sensor
I 11 ISC Valve

J 1 Junction Connector
J 2 Junction Connector
J 3 Junction Connector
J 4 Junction Connector
J 5 Junction Connector
J 6 Junction Connector

K 1 Knock Sensor

N 1 Neutral Start SW
N 2 Noise Filter
N 5 Noise Filter (Condenser Fan)

O 1 Oil Pressure SW
O 2 Option Connector (Keyless Buzzer)

P 1 Power Steering Oil Pressure SW
P 2 Pressure SW
P 3 Pressure SW

S 1 Skid Control ECU with Actuator
S 2 Speed Sensor (Combination Meter)
S 3 Speed Sensor (ECT)
S 4 Starter
S 5 Starter

T 1 Theft Deterrent Horn
T 4 Throttle Position Sensor

V 1 Vacuum Sensor
V 2 Variable Resistor
V 10 VSV (EVAP)
V 16 VSV (EGR)

W 1 Washer Motor
W 3 Water Temp. Sensor

Position of Parts in Engine Compartment

[RHD : 1KD–FTV]

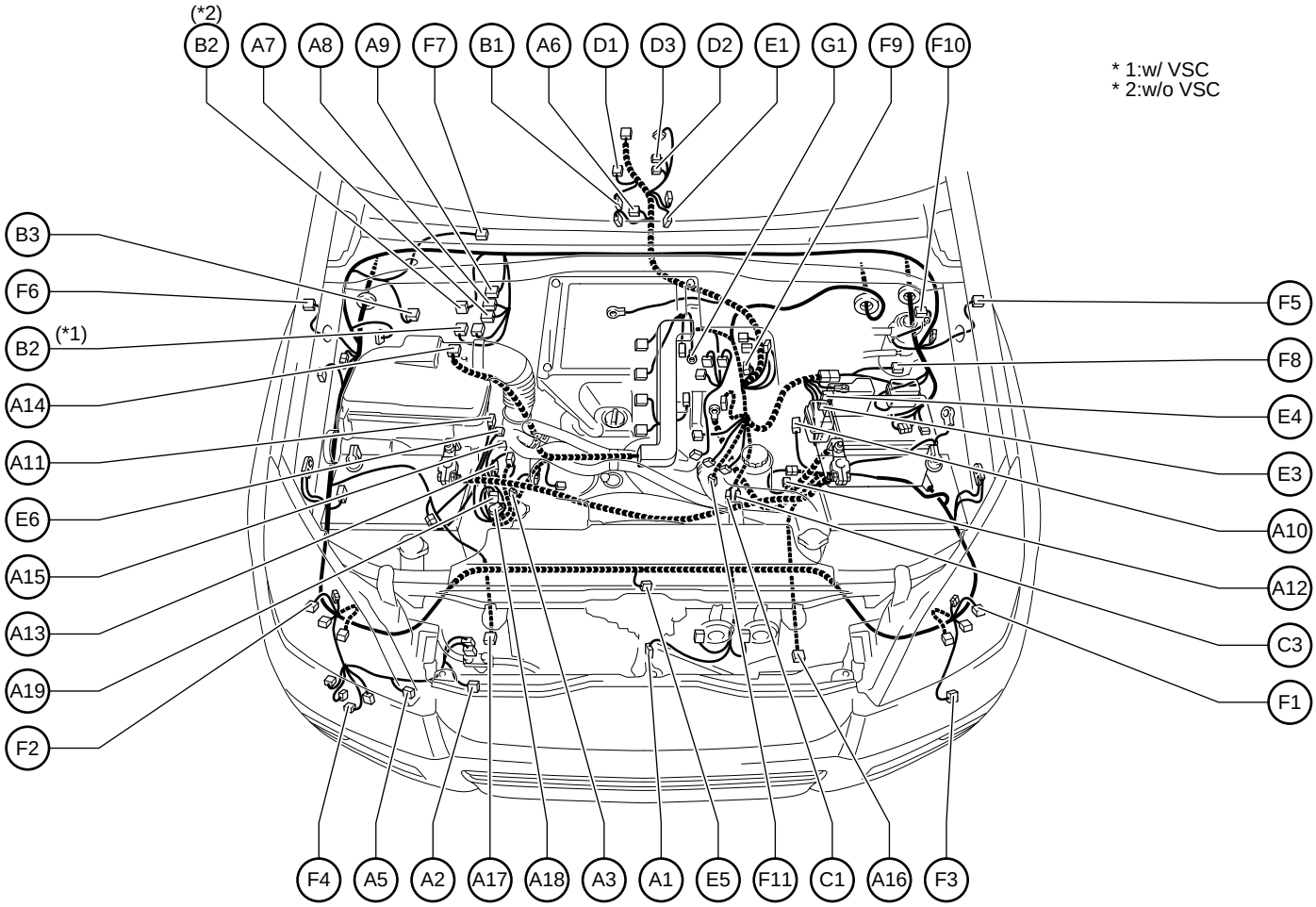

A 1 A/C Ambient Temp. Sensor
A 2 A/C Condenser Fan Motor
A 3 A/C Lock Sensor
A/C Magnetic Clutch
A 5 A/C Magnetic Valve
A 6 A/T Oil Temp. Sensor
A 7 ABS & BA & TRC & VSC Actuator
A 8 ABS & BA & TRC & VSC Actuator
A 9 ABS & BA & TRC & VSC Actuator
A 10 ABS Speed Sensor Front LH
A 11 ABS Speed Sensor Front RH
A 12 Absorber Control Actuator Front LH
A 13 Absorber Control Actuator Front RH
A 14 Air Flow Meter
A 15 Air Vent Control Servo Motor
A 16 Airbag Sensor Front LH
A 17 Airbag Sensor Front RH
A 18 Alternator
A 19 Alternator

B 1 Back–Up Light SW
B 2 Brake Fluid Level Warning SW
B 3 Brake Vacuum Warning SW

C 1 Camshaft Position Sensor
C 3 Crankshaft Position Sensor

D 1 Detection SW (Transfer 4WD Position)
D 2 Detection SW (Transfer L4 Position)
D 3 Detection SW (Transfer Neutral Position)

E 1 ECT Solenoid
E 3 Electronic Driver Unit
E 4 Electronic Driver Unit
E 5 Engine Hood Courtesy SW
E 6 Engine Oil Level Sensor

F 1 Front Clearance Light LH
Front Turn Signal Light LH
F 2 Front Clearance Light RH
Front Turn Signal Light RH
F 3 Front Fog Light LH
F 4 Front Fog Light RH
F 5 Front Side Turn Signal Light LH
F 6 Front Side Turn Signal Light RH
F 7 Front Wiper Motor
F 8 Fuel Heater
F 9 Fuel Pressure Sensor
F 10 Fuel Sedimentary SW
F 11 Fuel Temp. Sensor

G 1 Glow Plug

Position of Parts in Engine Compartment

[RHD : 1KD–FTV]

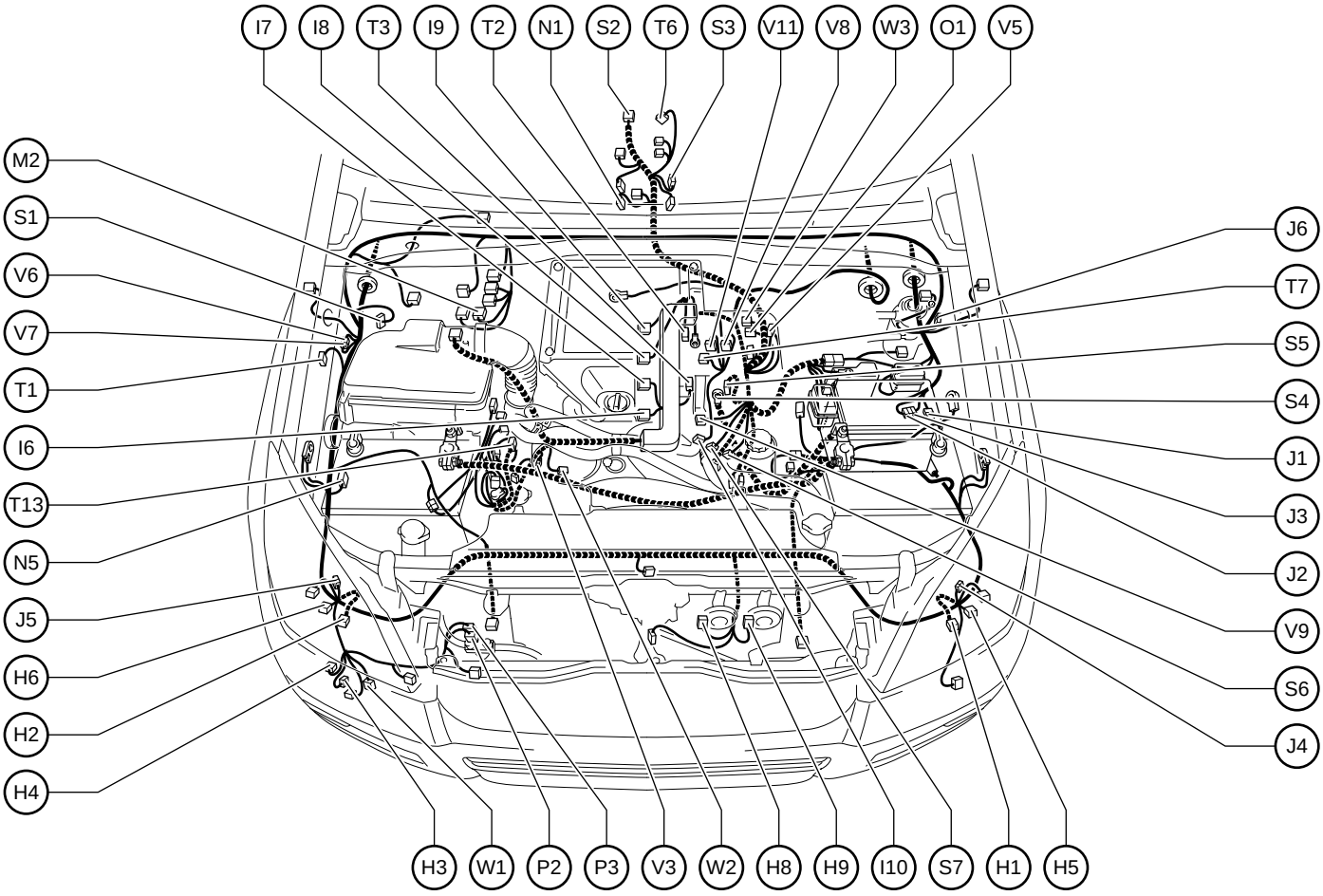

H 1 Headlight Beam Level Control Actuator LH
H 2 Headlight Beam Level Control Actuator RH
H 3 Headlight Cleaner Motor
H 4 Headlight Cleaner Relay
H 5 Headlight LH
H 6 Headlight RH
H 8 Horn (High)
H 9 Horn (Low)

I 6 Injector No.1
I 7 Injector No.2
I 8 Injector No.3
I 9 Injector No.4
I 10 Intake Air Temp. Sensor

J 1 Junction Connector
J 2 Junction Connector
J 3 Junction Connector
J 4 Junction Connector
J 5 Junction Connector
J 6 Junction Connector

M 2 Master Cylinder Pressure Sensor

N 1 Neutral Start SW
N 5 Noise Filter (Condenser Fan)

O 1 Oil Pressure SW

P 2 Pressure SW
P 3 Pressure SW

S 1 Skid Control ECU with Actuator
S 2 Speed Sensor (Combination Meter)
S 3 Speed Sensor (ECT)
S 4 Starter
S 5 Starter
S 6 Suction Control Valve No.1
S 7 Suction Control Valve No.2

T 1 Theft Deterrent Horn
T 2 Throttle Control Motor
T 3 Throttle Open SW
T 6 Transfer Actuator
T 7 Turbo Pressure Sensor
T 13 Turbo Charger Conpensater Resistor

V 3 Viscous Heater Magnetic Clutch
V 5 VRV (EGR)
V 6 VSC Check Connector
V 7 VSC Check Connector
V 8 VSV (EGR Cut)
V 9 VSV (Engine Mount)
V 11 VSV (Pressure Charge Valve)

W 1 Washer Motor
W 2 Water Temp. Sender
W 3 Water Temp. Sensor

Position of Parts in Engine Compartment

[RHD : 1KZ–TE]

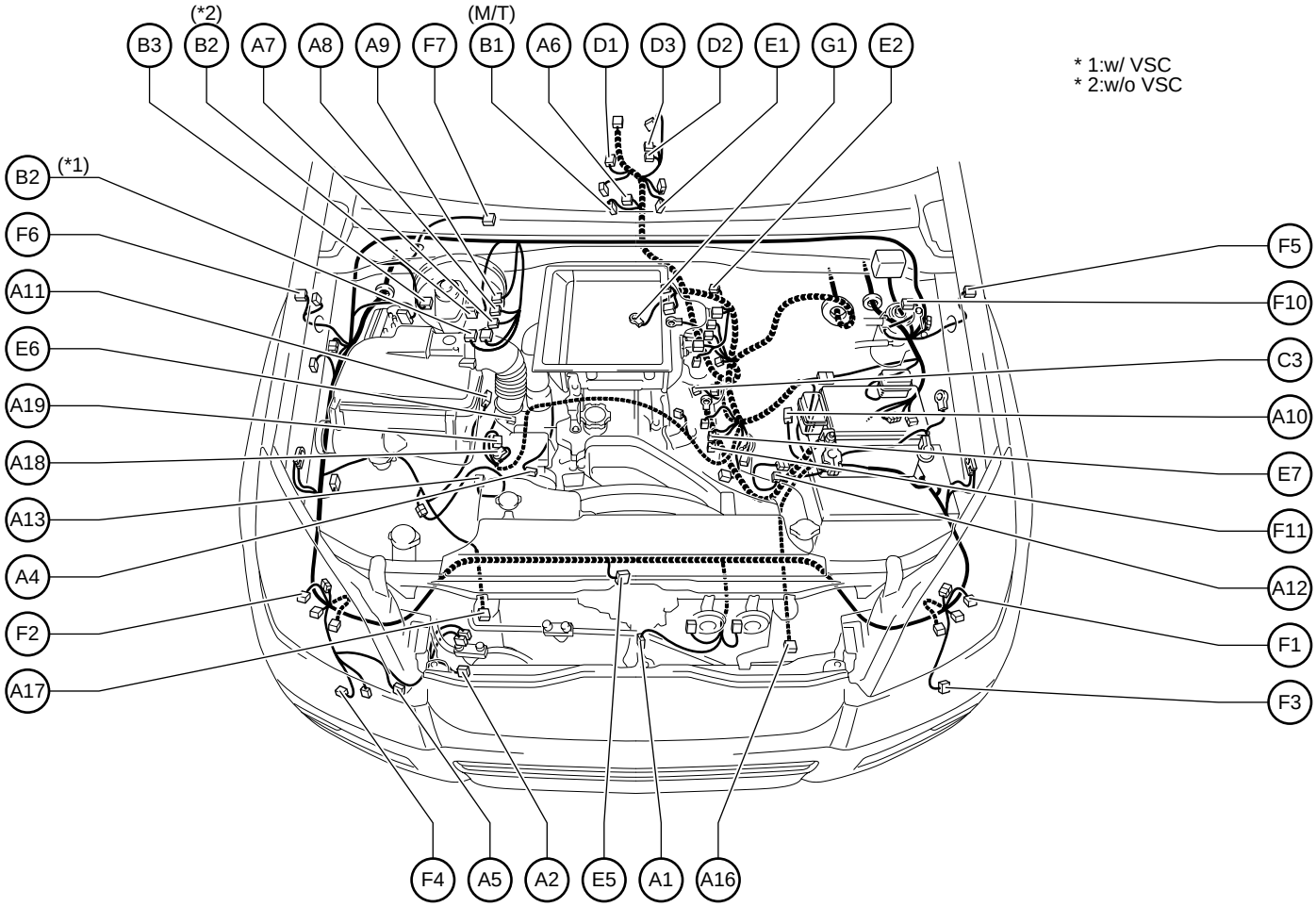

A 1 A/C Ambient Temp. Sensor
A 2 A/C Condenser Fan Motor
A 4 A/C Magnetic Clutch
A 5 A/C Magnetic Valve
A 6 A/T Oil Temp. Sensor
A 7 ABS & BA & TRC & VSC Actuator
A 8 ABS & BA & TRC & VSC Actuator
A 9 ABS & BA & TRC & VSC Actuator
A 10 ABS Speed Sensor Front LH
A 11 ABS Speed Sensor Front RH
A 12 Absorber Control Actuator Front LH
A 13 Absorber Control Actuator Front RH
A 16 Airbag Sensor Front LH
A 17 Airbag Sensor Front RH
A 18 Alternator
A 19 Alternator

B 1 Back–Up Light SW
B 2 Brake Fluid Level Warning SW
B 3 Brake Vacuum Warning SW

C 3 Crankshaft Position Sensor

D 1 Detection SW (Transfer 4WD Position)
D 2 Detection SW (Transfer L4 Position)
D 3 Detection SW (Transfer Neutral Position)

E 1 ECT Solenoid
E 2 EGR Valve Position Sensor
E 5 Engine Hood Courtesy SW
E 6 Engine Oil Level Sensor
E 7 Engine Speed Sensor

F 1 Front Clearance Light LH
Front Turn Signal Light LH
F 2 Front Clearance Light RH
Front Turn Signal Light RH
F 3 Front Fog Light LH
F 4 Front Fog Light RH
F 5 Front Side Turn Signal Light LH
F 6 Front Side Turn Signal Light RH
F 7 Front Wiper Motor
F 10 Fuel Sedimentary SW
F 11 Fuel Temp. Sensor

G 1 Glow Plug

Position of Parts in Engine Compartment

[RHD : 1KZ–TE]

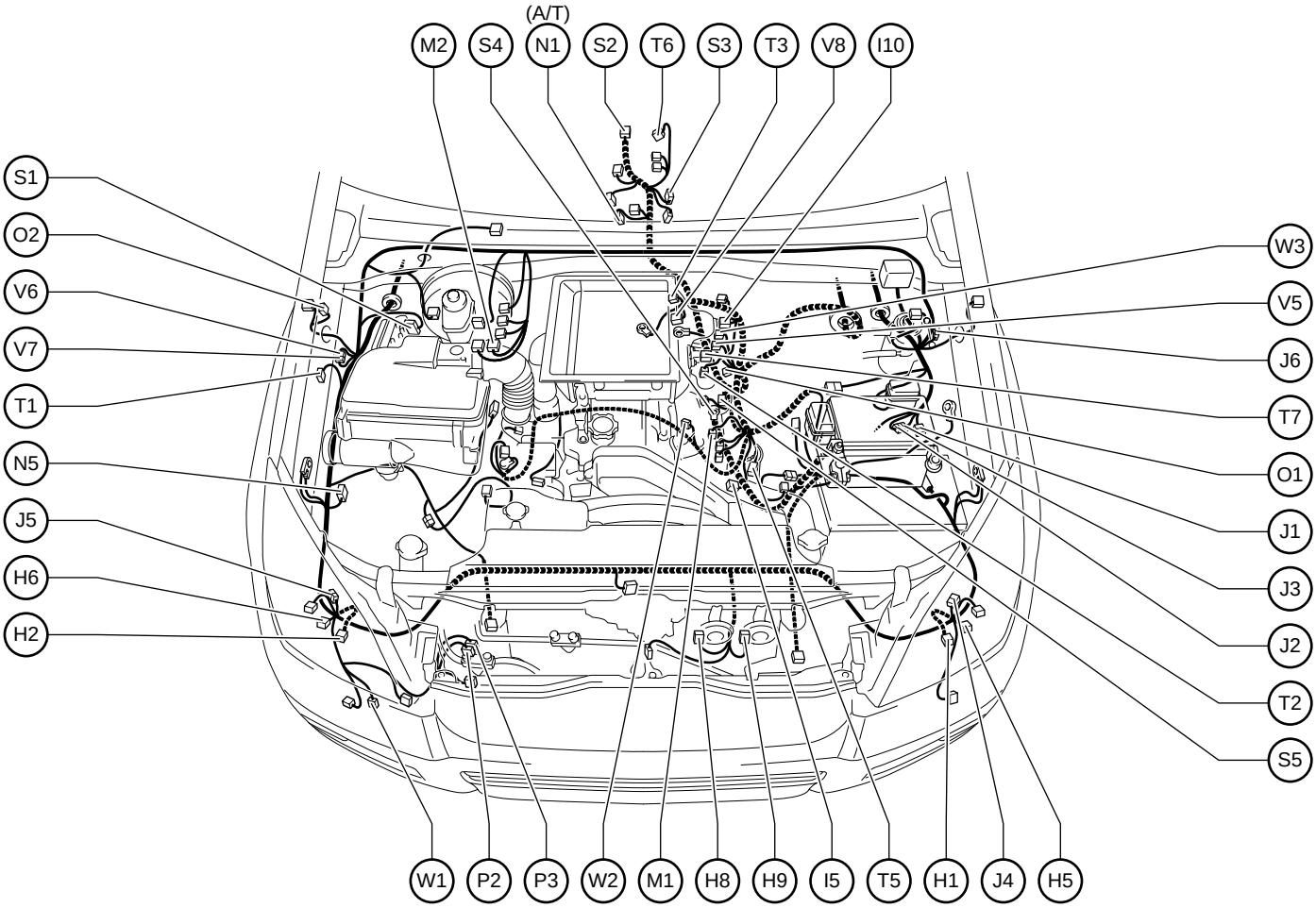

H 1 Headlight Beam Level Control Actuator LH
H 2 Headlight Beam Level Control Actuator RH
H 5 Headlight LH
H 6 Headlight RH
H 8 Horn (High)
H 9 Horn (Low)

I 5 Injection Pump
I 10 Intake Air Temp. Sensor

J 1 Junction Connector
J 2 Junction Connector
J 3 Junction Connector
J 4 Junction Connector
J 5 Junction Connector
J 6 Junction Connector

M 1 Magnetic Spill Valve
M 2 Master Cylinder Pressure Sensor

N 1 Neutral Start SW
N 5 Noise Filter (Condenser Fan)

O 1 Oil Pressure SW
O 2 Option Connector (Keyless Buzzer)

P 2 Pressure SW
P 3 Pressure SW

S 1 Skid Control ECU with Actuator
S 2 Speed Sensor (Combination Meter)
S 3 Speed Sensor (ECT)
S 4 Starter
S 5 Starter

T 1 Theft Deterrent Horn
T 2 Throttle Control Motor
T 3 Throttle Open SW
T 5 Timing Control Valve
T 6 Transfer Actuator
T 7 Turbo Pressure Sensor

V 5 VRV (EGR)
V 6 VSC Check Connector
V 7 VSC Check Connector
V 8 VSV (EGR Cut)

W 1 Washer Motor
W 2 Water Temp. Sender
W 3 Water Temp. Sensor

Position of Parts in Engine Compartment

[RHD : 5L–E]

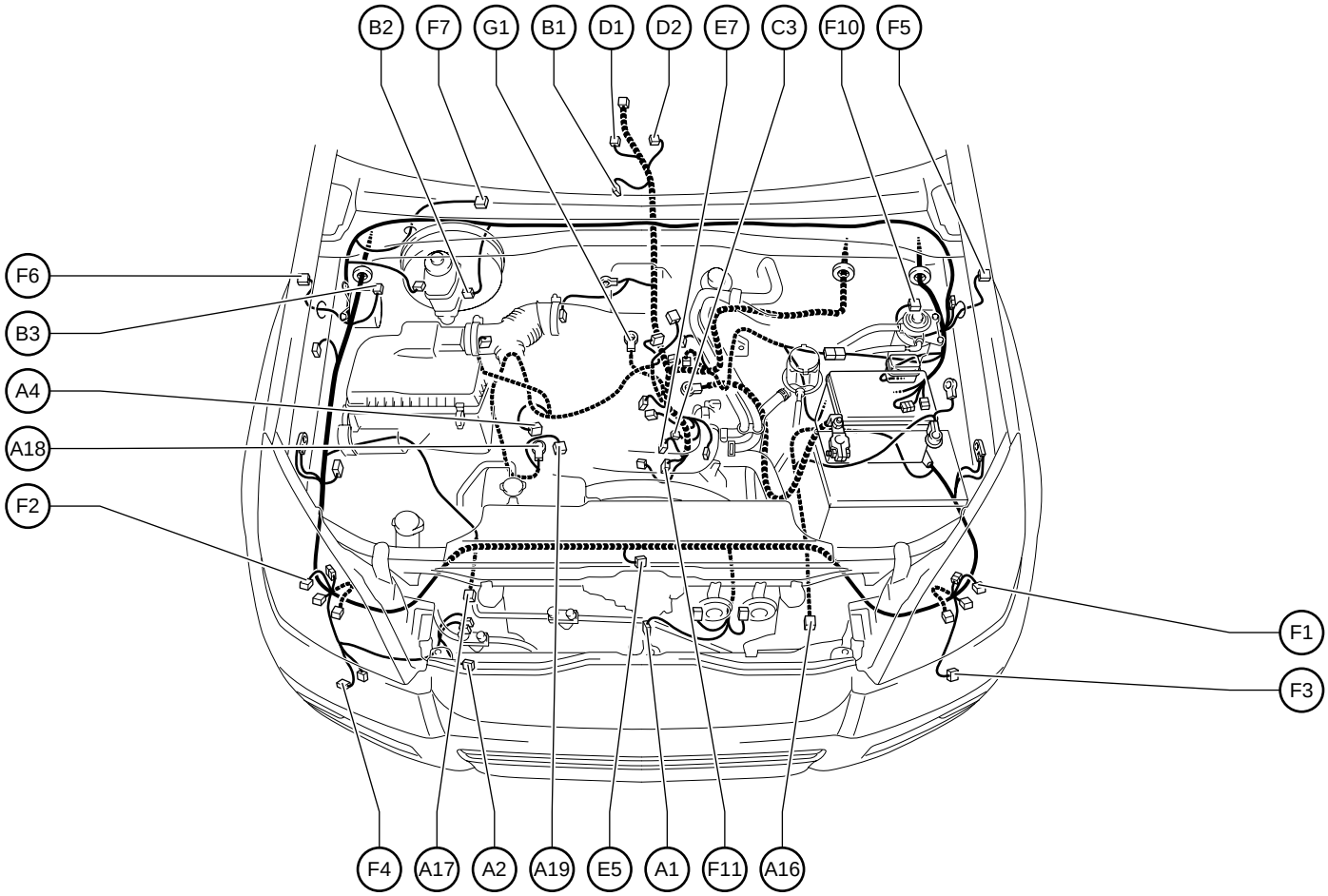

A 1 A/C Ambient Temp. Sensor
A 2 A/C Condenser Fan Motor
A 4 A/C Magnetic Clutch
A16 Airbag Sensor Front LH
A17 Airbag Sensor Front RH
A18 Alternator
A19 Alternator

B 1 Back–Up Light SW
B 2 Brake Fluid Level Warning SW
B 3 Brake Vacuum Warning SW

C 3 Crankshaft Position Sensor

D 1 Detection SW (Transfer 4WD Position)
D 2 Detection SW (Transfer L4 Position)

E 5 Engine Hood Courtesy SW
E 7 Engine Speed Sensor

F 1 Front Clearance Light LH
Front Turn Signal Light LH
F 2 Front Clearance Light RH
Front Turn Signal Light RH
F 3 Front Fog Light LH
F 4 Front Fog Light RH
F 5 Front Side Turn Signal Light LH
F 6 Front Side Turn Signal Light RH
F 7 Front Wiper Motor
F10 Fuel Sedimentary SW
F11 Fuel Temp. Sensor

G 1 Glow Plug

Position of Parts in Engine Compartment

[RHD : 5L–E]

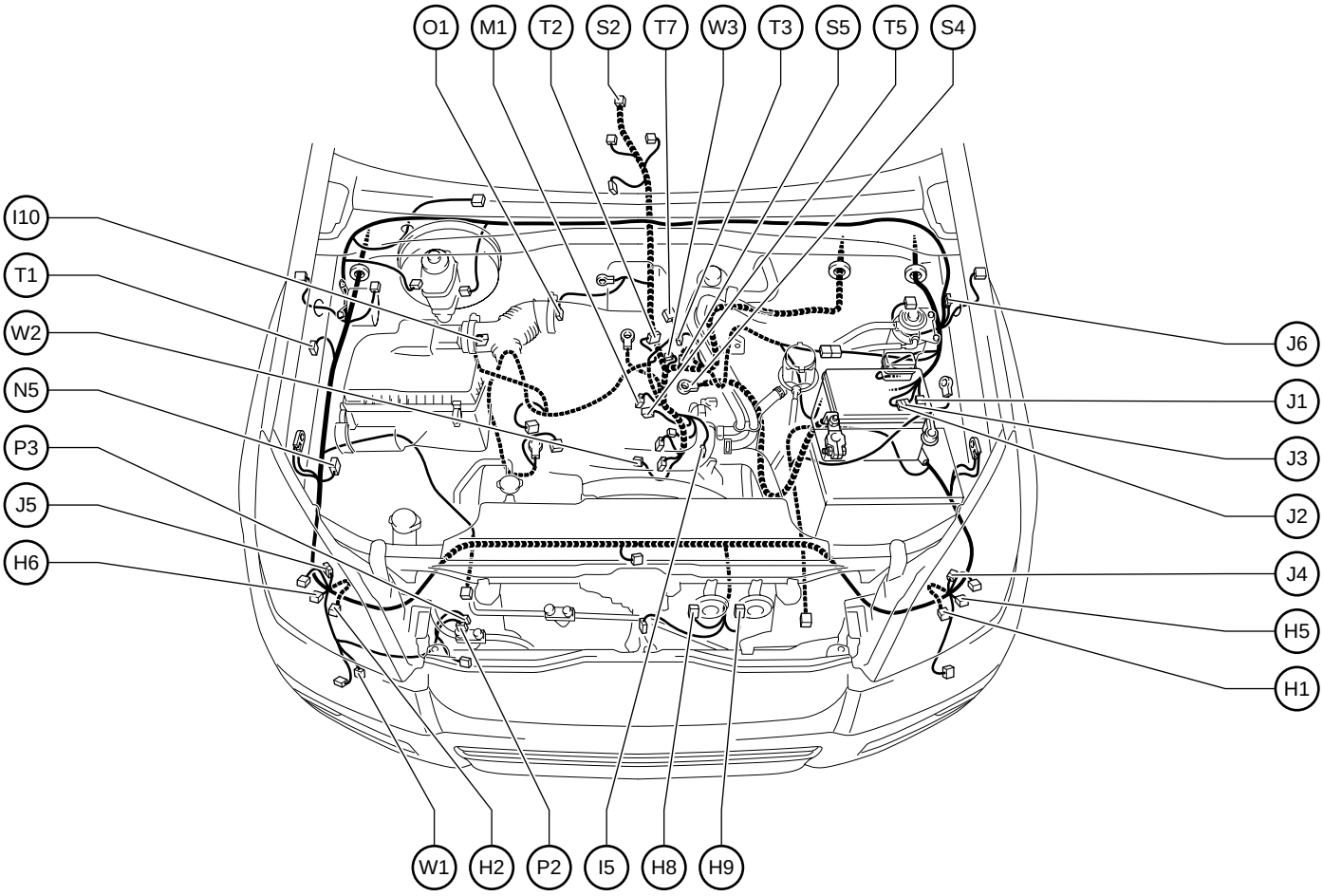

H 1 Headlight Beam Level Control Actuator LH
H 2 Headlight Beam Level Control Actuator RH
H 5 Headlight LH
H 6 Headlight RH
H 8 Horn (High)
H 9 Horn (Low)

I 5 Injection Pump
I 10 Intake Air Temp. Sensor

J 1 Junction Connector
J 2 Junction Connector
J 3 Junction Connector
J 4 Junction Connector
J 5 Junction Connector
J 6 Junction Connector

M 1 Magnetic Spill Valve

N 5 Noise Filter (Condenser Fan)

O 1 Oil Pressure SW

P 2 Pressure SW
P 3 Pressure SW

S 2 Speed Sensor (Combination Meter)
S 4 Starter
S 5 Starter

T 1 Theft Deterrent Horn
T 2 Throttle Control Motor
T 3 Throttle Open SW
T 5 Timing Control Valve
T 7 Turbo Pressure Sensor

W 1 Washer Motor
W 2 Water Temp. Sender
W 3 Water Temp. Sensor

Position of Parts in Instrument Panel

[RHD]

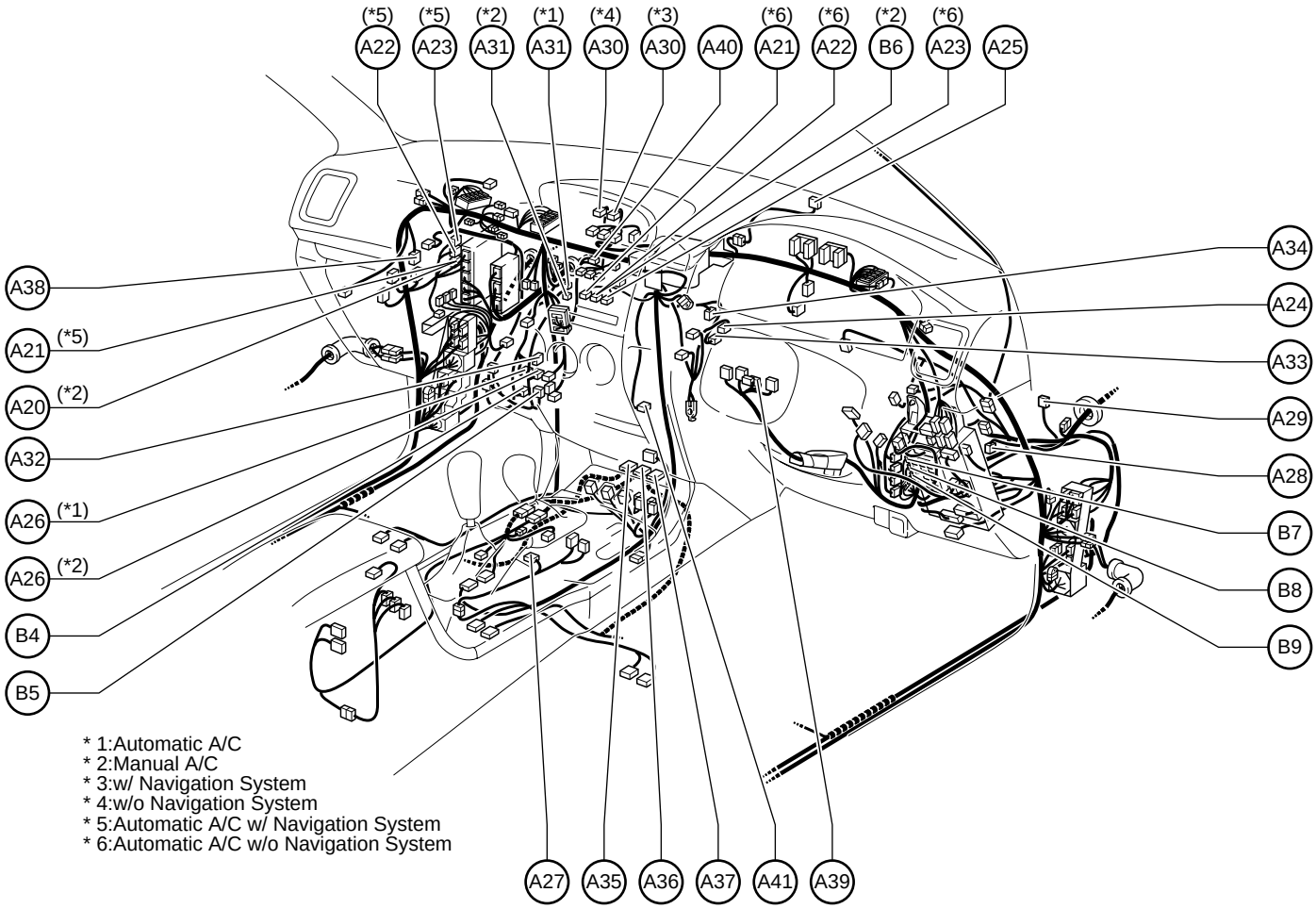

A20 A/C Amplifier
A21 A/C Control Assembly (w/o Navigation System)
A/C ECU (w/ Navigation System)
A22 A/C Control Assembly (w/o Navigation System)
A/C ECU (w/ Navigation System)
A23 A/C Control Assembly (w/o Navigation System)
A/C ECU (w/ Navigation System)
A24 A/C Room Temp. Sensor
A25 A/C Solar Sensor
A26 A/C Thermistor
A27 A/T Shift Indicator
A28 Accel Position Sensor
A29 Acceleration Control Sensor Front
A30 Accessory Meter
A31 Air Inlet Control Servo Motor
A32 Air Mix Control Servo Motor LH
A33 Air Mix Control Servo Motor RH
A34 Air Vent Mode Control Servo Motor
A35 Airbag Sensor Assembly
A36 Airbag Sensor Assembly
A37 Airbag Sensor Assembly
A38 Airbag Squib (Front Passenger Airbag Assembly)
A39 Airbag Squib (Steering Wheel Pad)
A40 Antenna Amplifier
A41 Ashtray Illumination

B 4 Blower Motor Linear Controller
B 5 Blower Resistor
B 6 Blower SW
B 7 Body ECU
B 8 Body ECU
B 9 Body ECU

Position of Parts in Instrument Panel

[RHD]

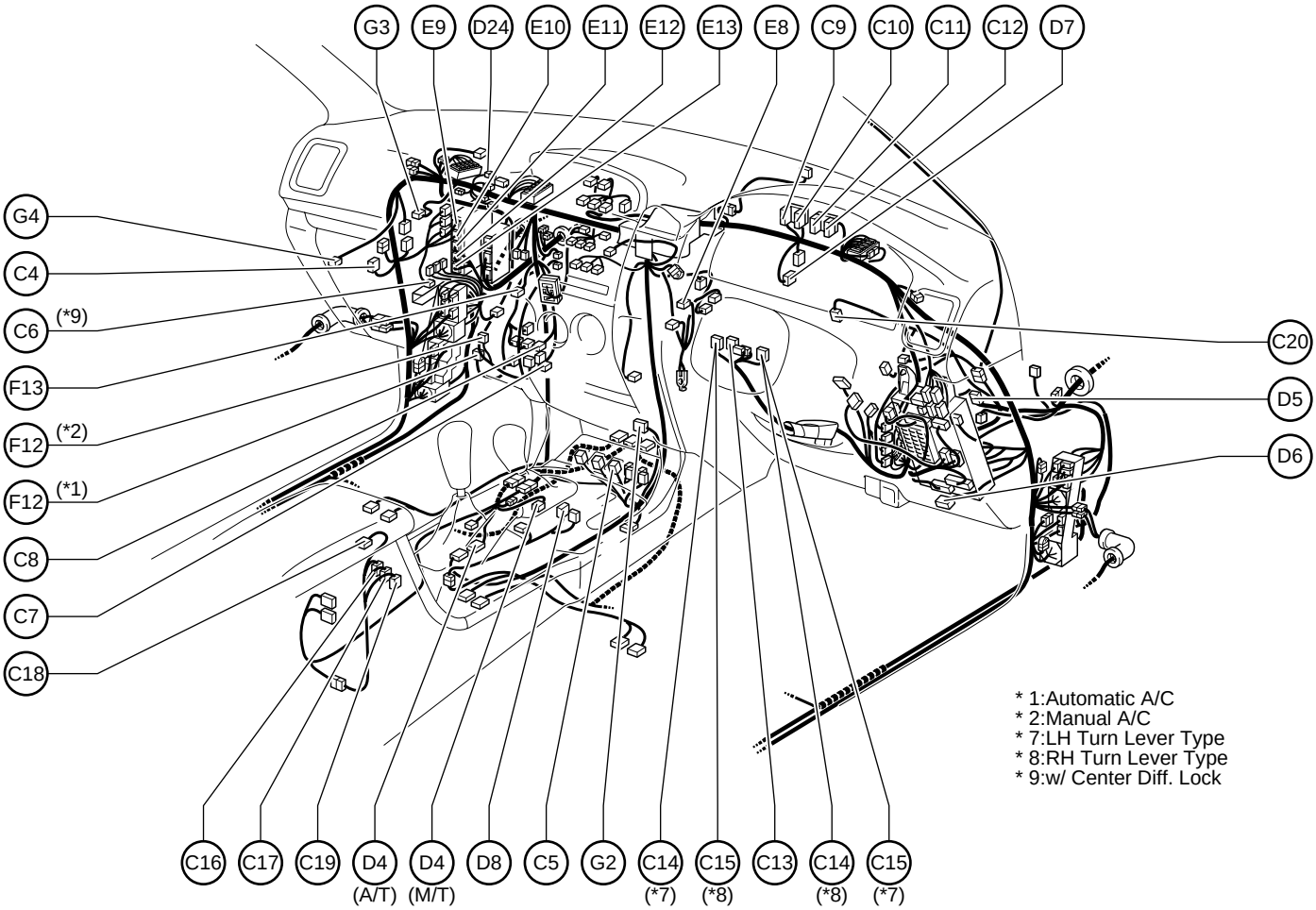

C 4 CD Automatic Changer
C 5 Center Diff. Lock Control SW
C 6 Center Diff. Lock ECU
C 7 Cigarette Lighter
C 8 Cigarette Lighter Illumination
C 9 Combination Meter
C10 Combination Meter
C11 Combination Meter
C12 Combination Meter
C13 Combination SW
C14 Combination SW
C15 Combination SW
C16 Cool Box Amplifier
C17 Cool Box Motor
C18 Cool Box SW
C19 Cool Box Thermistor
C20 Cruise Control Clutch SW

D 4 Deceleration Sensor
D 5 Diode (Front Fog Light)
D 6 DLC3
D 7 Double Door Lock Control Relay
D 8 Downhill Assist Control SW
D24 Diode (Back–Up Light)

E 8 ECT Pattern Select SW
E 9 Engine and ECT ECU (A/T)
Engine ECU (M/T)
E10 Engine and ECT ECU (A/T)
Engine ECU (M/T)
E11 Engine and ECT ECU (A/T)
Engine ECU (M/T)
E12 Engine and ECT ECU (A/T)
Engine ECU (M/T)
E13 Engine and ECT ECU (A/T)
Engine ECU (M/T)

F12 Front Blower Motor
F13 Front Passenger's Seat Belt Warning Light

G 2 Gateway ECU
G 3 Glove Box Light
G 4 Glove Box Light SW

Position of Parts in Instrument Panel

[RHD]

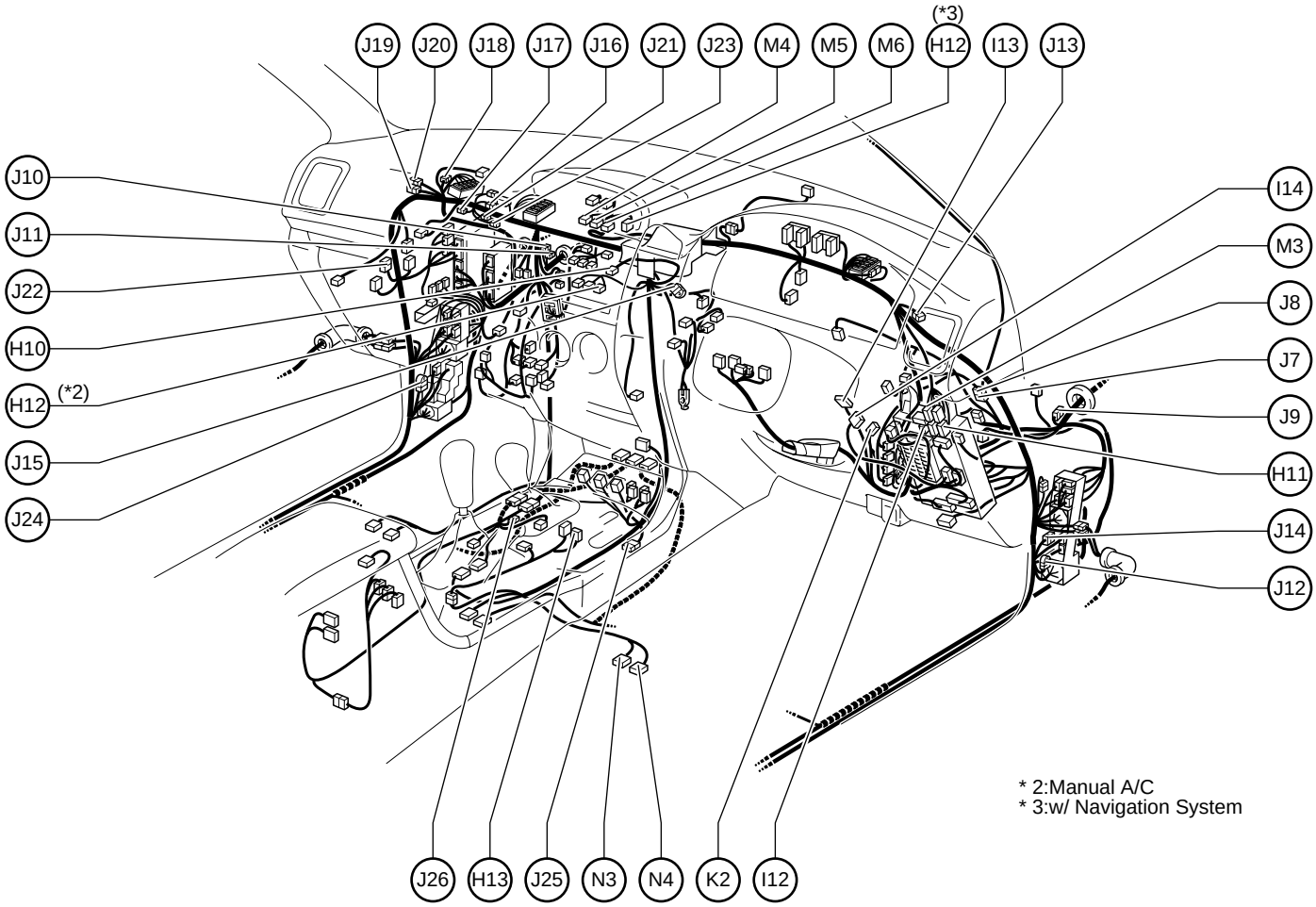

H10 Hazard SW
H11 Headlight Beam Level Control SW
H12 Heater Control SW
H13 Height Control and Suspension SW

I 12 Idle-Up SW
I 13 Ignition Key Cylinder Light
Transponder Key Amplifier
I 14 Ignition SW

J 7 Junction Connector
J 8 Junction Connector
J 9 Junction Connector
J 10 Junction Connector
J 11 Junction Connector
J 12 Junction Connector
J 13 Junction Connector
J 14 Junction Connector
J 15 Junction Connector
J 16 Junction Connector
J 17 Junction Connector
J 18 Junction Connector
J 19 Junction Connector
J 20 Junction Connector
J 21 Junction Connector
J 22 Junction Connector
J 23 Junction Connector
J 24 Junction Connector
J 25 Junction Connector
J 26 Junction Connector

K 2 Key Interlock Solenoid
Unlock Warning SW

M 3 Mirror Heater SW
M 4 Multi-Display
M 5 Multi-Display
M 6 Multi-Display

N 3 Navigation ECU
N 4 Navigation ECU

Position of Parts in Instrument Panel

[RHD]

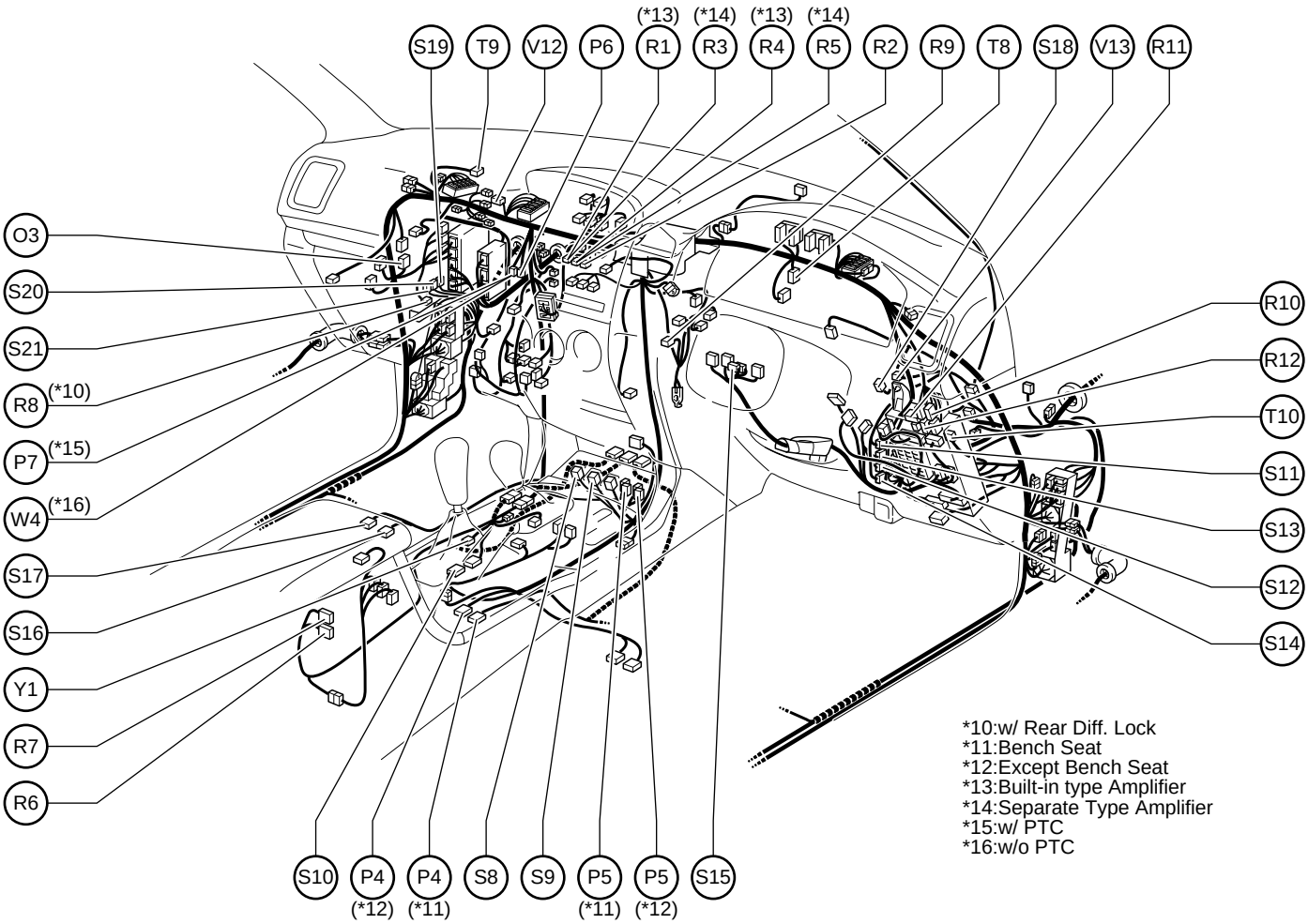

O 3 Option Connector (Door Control Receiver)

P 4 Parking Brake SW
P 5 Power Outlet (Front)
P 6 PTC Heater
P 7 PTC Heater

R 1 Radio and Player
R 2 Radio and Player
R 3 Radio and Player
R 4 Radio and Player
R 5 Radio and Player
R 6 Rear Blower SW
R 7 Rear Cooler Control SW
R 8 Rear Diff. Lock Control ECU
R 9 Rear Diff. Lock SW
R10 Rear Fog Light SW
R11 Remote Control Mirror SW
R12 Rheostat

S 8 Seat Heater SW Front LH
S 9 Seat Heater SW Front RH
S10 Shift Lock Control ECU
S11 Skid Control ECU
S12 Skid Control ECU
S13 Skid Control ECU
S14 Skid Control ECU
S15 Steering Sensor
S16 Stereo Component Amplifier
S17 Stereo Component Amplifier
S18 Stop Light SW
S19 Suspension Control ECU
S20 Suspension Control ECU
S21 Suspension Control ECU

T 8 Theft Deterrent ECU
T 9 Transponder Key Computer
T10 Turn Signal Flasher

V12 Viscous Heater Amplifier
V13 VSC Warning Buzzer

W 4 Water Temp. Sensor (A/C)

Y 1 Yaw Rate Sensor

Position of Parts in Body

[RHD : 5–Door]

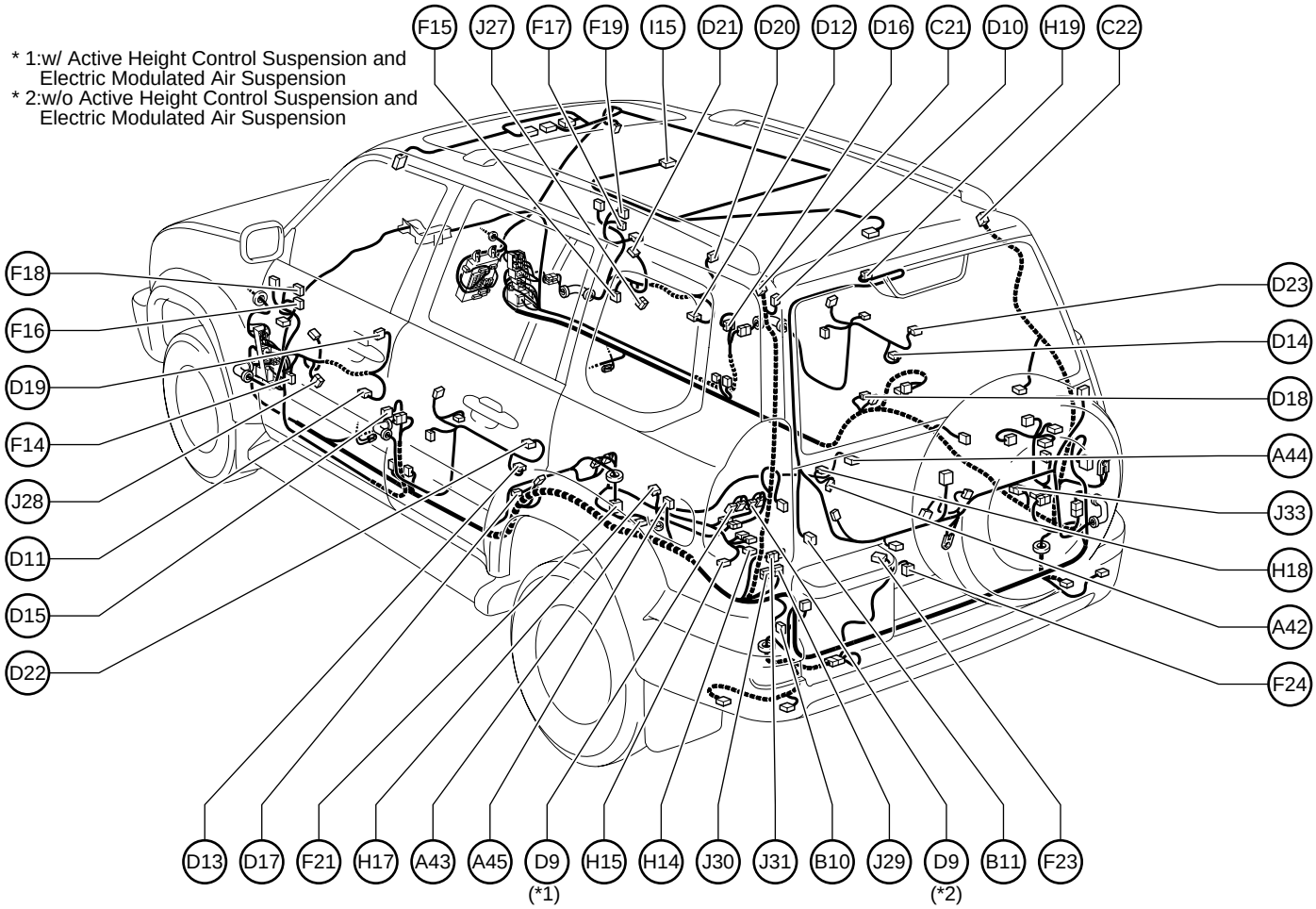

A 42 ABS Speed Sensor Rear
A 43 Absorber Control Actuator Rear LH
A 44 Absorber Control Actuator Rear RH
A 45 Acceleration Control Sensor Rear

B 10 Back Door Courtesy SW
B 11 Back Door Key Lock and Unlock SW
Back Door Lock Motor
Back Door Unlock Detection SW

C 21 Curtain Shield Airbag Squib LH
C 22 Curtain Shield Airbag Squib RH

D 9 Detection SW (Rear Diff. Lock)
D 10 Door Control Receiver
D 11 Door Courtesy Light Front LH
D 12 Door Courtesy Light Front RH
D 13 Door Courtesy Light Rear LH
D 14 Door Courtesy Light Rear RH
D 15 Door Courtesy SW Front LH
D 16 Door Courtesy SW Front RH
D 17 Door Courtesy SW Rear LH
D 18 Door Courtesy SW Rear RH
D 19 Door Key Lock and Unlock SW Front LH
Door Lock Motor Front LH
Door Unlock Detection SW Front LH
Double Door Lock Motor Front LH
Position SW Front LH
D 20 Door Key Lock and Unlock SW Front RH
Door Lock Motor Front RH
Door Unlock Detection SW Front RH
Double Door Lock Motor Front RH
Position SW Front RH
D 21 Door Lock Control SW
Power Window Master SW
D 22 Door Lock Motor Rear LH
Door Unlock Detection SW Rear LH
Double Door Lock Motor Rear LH
Position SW Rear LH
D 23 Door Lock Motor Rear RH
Door Unlock Detection SW Rear RH
Double Door Lock Motor Rear RH
Position SW Rear RH

F 14 Front Door Speaker LH
F 15 Front Door Speaker RH
F 16 Front Door Squawker LH
F 17 Front Door Squawker RH
F 18 Front Door Tweeter Speaker LH
F 19 Front Door Tweeter Speaker RH
F 21 Fuel Pump and Fuel Sender (Gasoline)
Fuel Sender (Diesel)
F 23 Fuel Sender (Sub)
F 24 Fuel Sender (Sub)

H 14 Height Control Compressor
H 15 Height Control Exhaust Valve
H 17 Height Control Sensor Rear LH
H 18 Height Control Sensor Rear RH
H 19 High Mounted Stop Light

I 15 Interior Light

J 27 Junction Connector
J 28 Junction Connector
J 29 Junction Connector
J 30 Junction Connector
J 31 Junction Connector
J 33 Junction Connector

Position of Parts in Body

[RHD : 5–Door]

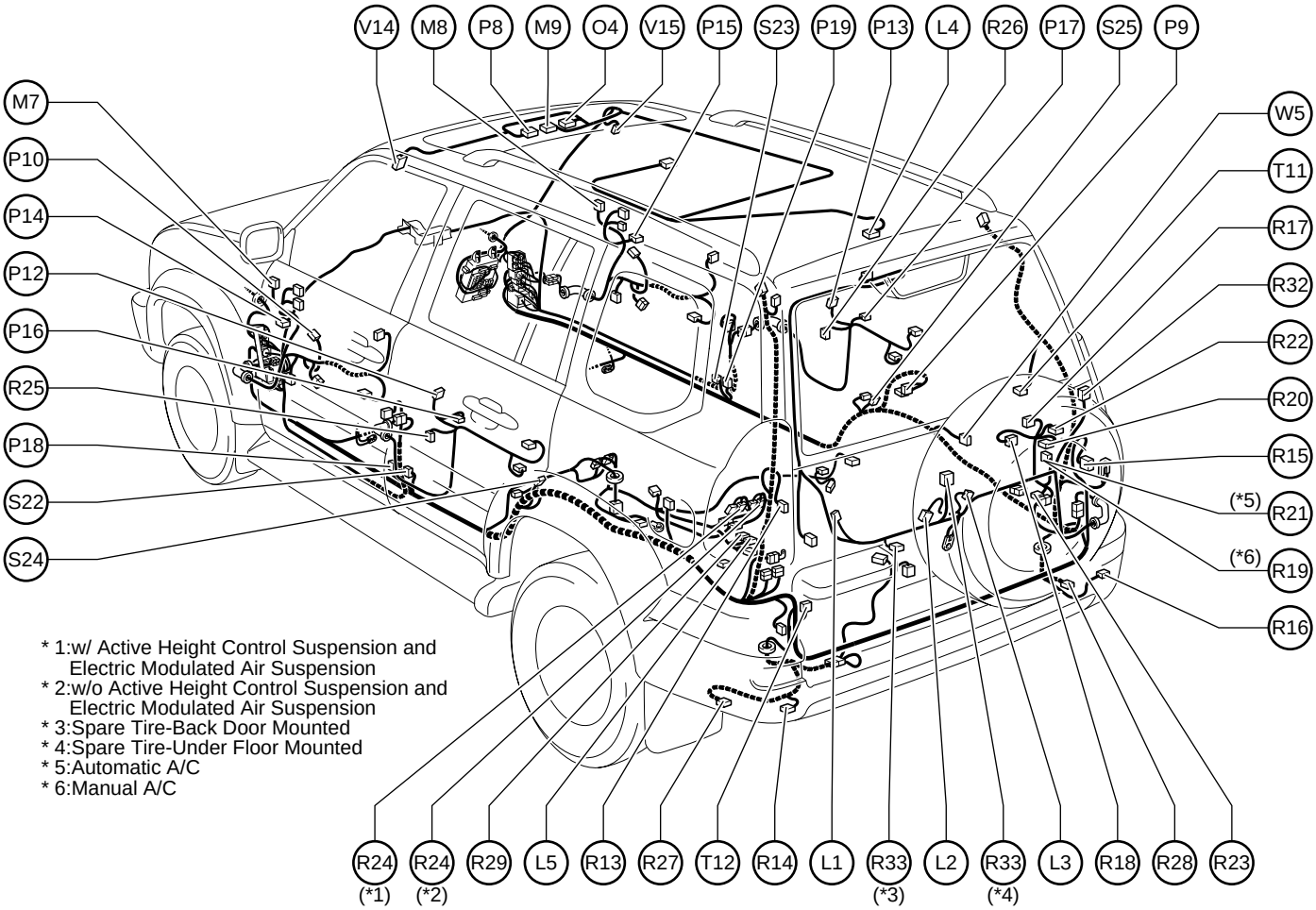

* 1:w/ Active Height Control Suspension and Electric Modulated Air Suspension
* 2:w/o Active Height Control Suspension and Electric Modulated Air Suspension
* 3:Spare Tire-Back Door Mounted
* 4:Spare Tire-Under Floor Mounted
* 5:Automatic A/C
* 6:Manual A/C

L 1 License Plate Light
L 2 License Plate Light LH
L 3 License Plate Light RH
L 4 Luggage Compartment Light
L 5 Low Pressure Tank Valve

M 7 Mirror Heater LH
Remote Control Mirror LH
M 8 Mirror Heater RH
Remote Control Mirror RH
M 9 Moon Roof Control ECU and Motor

O 4 Overhead J/B

P 8 Personal Light
P 9 Power Outlet (Rear)
P 10 Power Window Control SW Front LH
P 12 Power Window Control SW Rear LH
P 13 Power Window Control SW Rear RH
P 14 Power Window Motor Front LH
P 15 Power Window Motor Front RH
P 16 Power Window Motor Rear LH
P 17 Power Window Motor Rear RH
P 18 Pretensioner LH
P 19 Pretensioner RH

R 13 Rear Combination Light LH
R 14 Rear Combination Light LH
R 15 Rear Combination Light RH
R 16 Rear Combination Light RH
R 17 Rear Cooler Amplifier
R 18 Rear Cooler Blower Motor
R 19 Rear Cooler Blower Resistor
R 20 Rear Cooler Magnetic Valve
R 21 Rear Cooler Power Transistor
R 22 Rear Cooler Relay
R 23 Rear Cooler Thermistor
R 24 Rear Diff. Lock Motor
R 25 Rear Door Speaker LH
R 26 Rear Door Speaker RH
R 27 Rear Fog Light LH
R 28 Rear Fog Light RH
R 29 Rear Height Control Valve
R 32 Rear Window Defogger
R 33 Rear Wiper Motor

S 22 Side Airbag Sensor Front LH
S 23 Side Airbag Sensor Front RH
S 24 Side Airbag Sensor Rear LH
S 25 Side Airbag Sensor Rear RH

T 11 Theft Deterrent Siren
T 12 Trailer Socket

V 14 Vanity Light LH
V 15 Vanity Light RH

W 5 Woofer Speaker

Position of Parts in Body

[RHD : 3–Door]

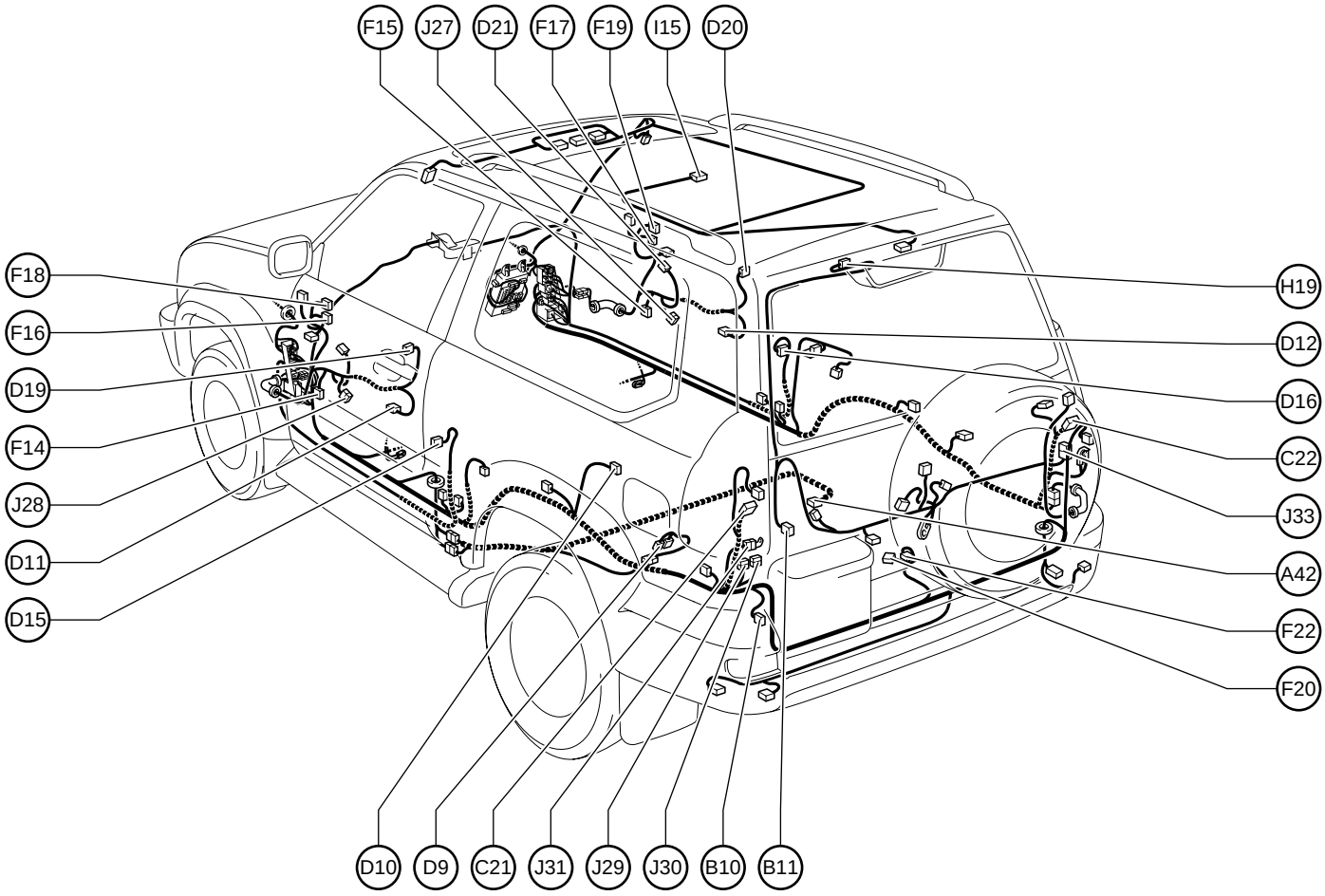

A 42 ABS Speed Sensor Rear

B 10 Back Door Courtesy SW
B 11 Back Door Key Lock and Unlock SW
Back Door Lock Motor
Back Door Unlock Detection SW

C21 Curtain Shield Airbag Squib LH
C22 Curtain Shield Airbag Squib RH

D 9 Detection SW (Rear Diff. Lock)
D10 Door Control Receiver
D 11 Door Courtesy Light Front LH
D 12 Door Courtesy Light Front RH
D15 Door Courtesy SW Front LH
D16 Door Courtesy SW Front RH
D19 Door Key Lock and Unlock SW Front LH
Door Lock Motor Front LH
Door Unlock Detection SW Front LH
Double Door Lock Motor Front LH
Position SW Front LH
D20 Door Key Lock and Unlock SW Front RH
Door Lock Motor Front RH
Door Unlock Detection SW Front RH
Double Door Lock Motor Front RH
Position SW Front RH
D21 Door Lock Control SW
Power Window Master SW

F 14 Front Door Speaker LH
F 15 Front Door Speaker RH
F 16 Front Door Squawker LH
F 17 Front Door Squawker RH
F 18 Front Door Tweeter Speaker LH
F 19 Front Door Tweeter Speaker RH
F 20 Fuel Pump
F 22 Fuel Sender

H19 High Mounted Stop Light

I 15 Interior Light

J 27 Junction Connector
J 28 Junction Connector
J 29 Junction Connector
J 30 Junction Connector
J 31 Junction Connector
J 33 Junction Connector

Position of Parts in Body

[RHD : 3–Door]

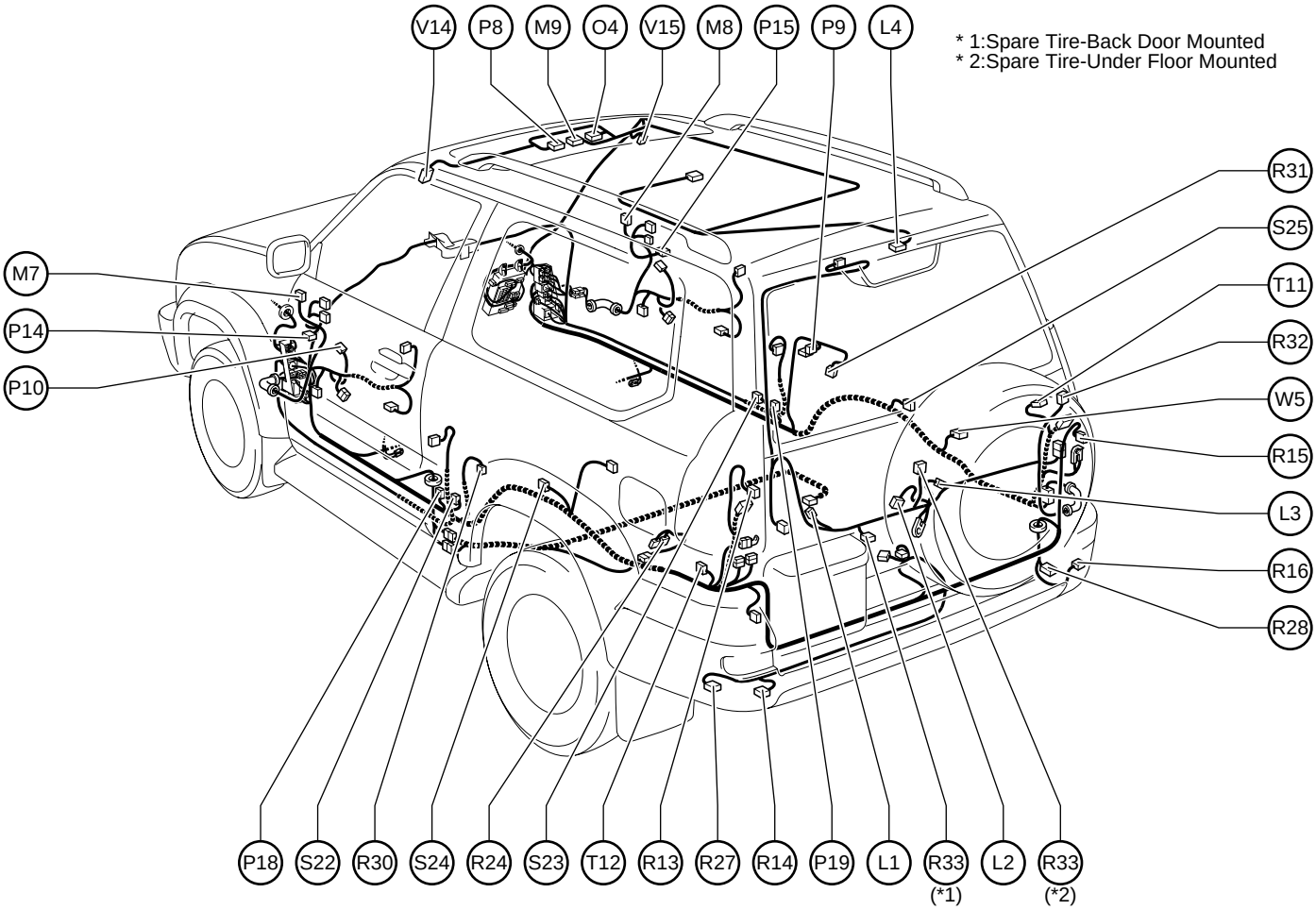

L 1 License Plate Light
L 2 License Plate Light LH
L 3 License Plate Light RH
L 4 Luggage Compartment Light

M 7 Mirror Heater LH
Remote Control Mirror LH
M 8 Mirror Heater RH
Remote Control Mirror RH
M 9 Moon Roof Control ECU and Motor

O 4 Overhead J/B

P 8 Personal Light
P 9 Power Outlet (Rear)
P 10 Power Window Control SW Front LH
P 14 Power Window Motor Front LH
P 15 Power Window Motor Front RH
P 18 Pretensioner LH
P 19 Pretensioner RH

R 13 Rear Combination Light LH
R 14 Rear Combination Light LH
R 15 Rear Combination Light RH
R 16 Rear Combination Light RH
R 24 Rear Diff. Lock Motor
R 27 Rear Fog Light LH
R 28 Rear Fog Light RH
R 30 Rear Speaker LH
R 31 Rear Speaker RH
R 32 Rear Window Defogger
R 33 Rear Wiper Motor

S 22 Side Airbag Sensor Front LH
S 23 Side Airbag Sensor Front RH
S 24 Side Airbag Sensor Rear LH
S 25 Side Airbag Sensor Rear RH

T 11 Theft Deterrent Siren
T 12 Trailer Socket

V 14 Vanity Light LH
V 15 Vanity Light RH

W 5 Woofer Speaker

Position of Parts in Seat

[RHD : 8Way Power Seat]

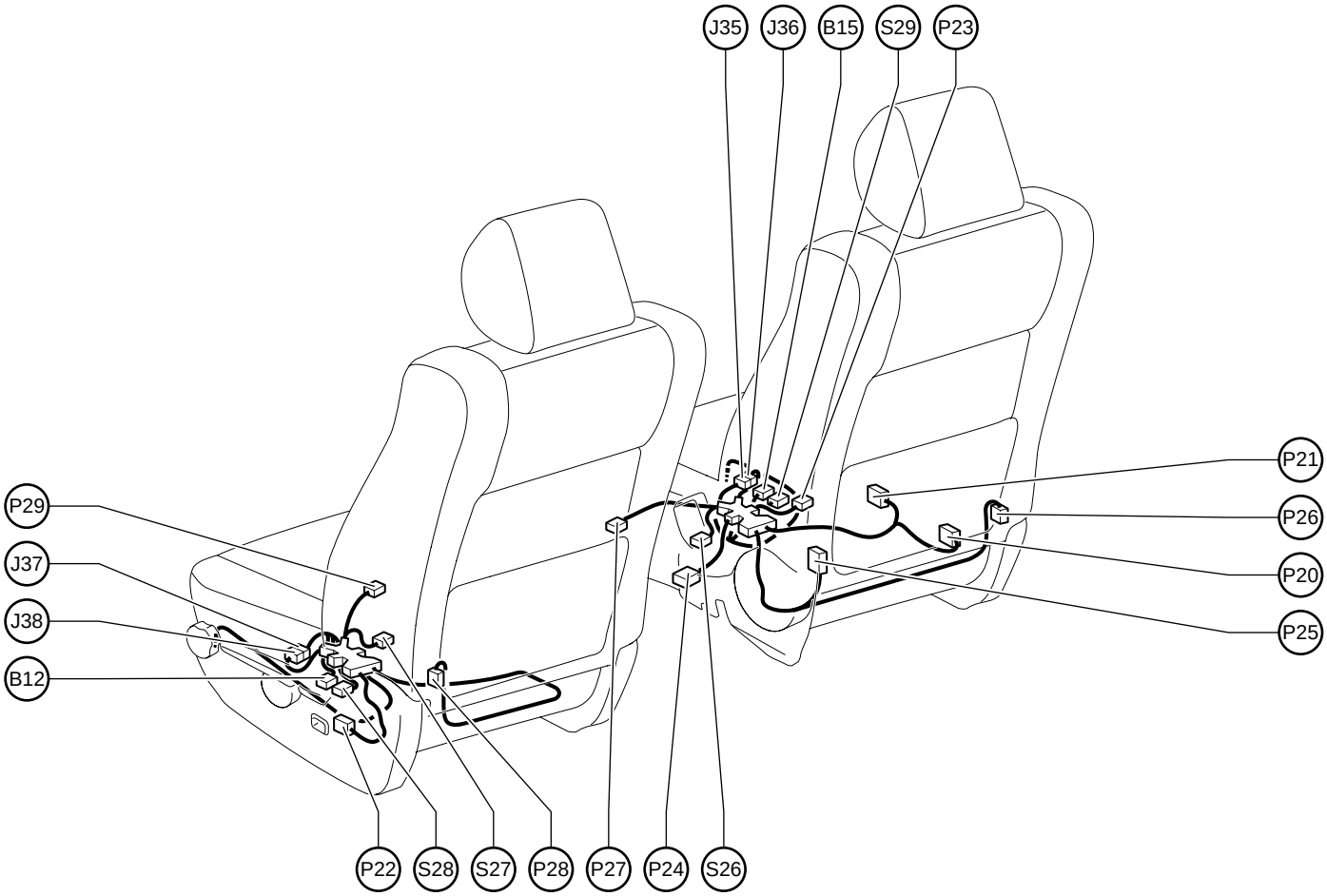

B12 Buckle SW LH
Occupant Detection Sensor
B15 Buckle SW RH
Seat Position Sensor

J 35 Junction Connector
J 36 Junction Connector
J 37 Junction Connector
J 38 Junction Connector

P20 Power Seat Control SW
(Driver's Seat Lumbar Support Control)
P21 Power Seat Control SW (Driver's Seat)
P22 Power Seat Control SW (Front Passenger's Seat)
P23 Power Seat Motor (Driver's Seat Front Vertical Control)
P24 Power Seat Motor (Driver's Seat Lifter Control)
P25 Power Seat Motor
(Driver's Seat Lumbar Support Control)
P26 Power Seat Motor (Driver's Seat Reclining Control)
P27 Power Seat Motor (Driver's Seat Slide Control)
P28 Power Seat Motor
(Front Passenger's Seat Reclining Control)
P29 Power Seat Motor
(Front Passenger's Seat Slide Control)

S26 Seat Heater (Driver's Seat)
S27 Seat Heater (Front Passenger's Seat)
S28 Side Airbag Squib LH
S29 Side Airbag Squib RH

Position of Parts in Seat

[RHD : Except 8Way Power Seat]

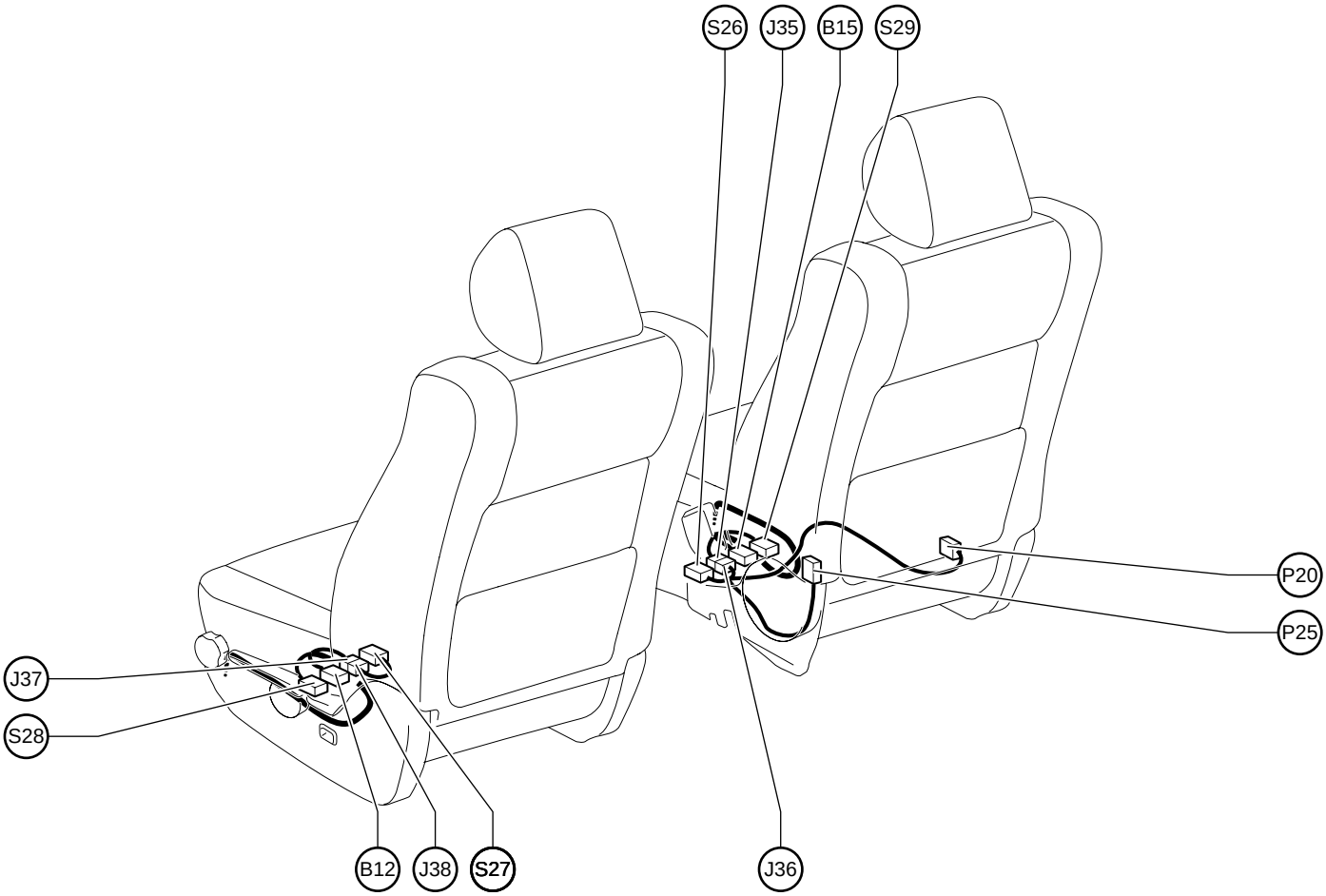

B12 Buckle SW LH
Occupant Detection Sensor
B15 Buckle SW RH
Seat Position Sensor

J 35 Junction Connector
J 36 Junction Connector
J 37 Junction Connector
J 38 Junction Connector

P20 Power Seat Control SW
(Driver's Seat Lumbar Support Control)
P25 Power Seat Motor
(Driver's Seat Lumbar Support Control)

S26 Seat Heater (Driver's Seat)
S27 Seat Heater (Front Passenger's Seat)
S28 Side Airbag Squib LH
S29 Side Airbag Squib RH

▭ : Location of Connector Joining Wire Harness and Wire Harness

▽ : Location of Ground Points

[LHD : 1GR-FE]

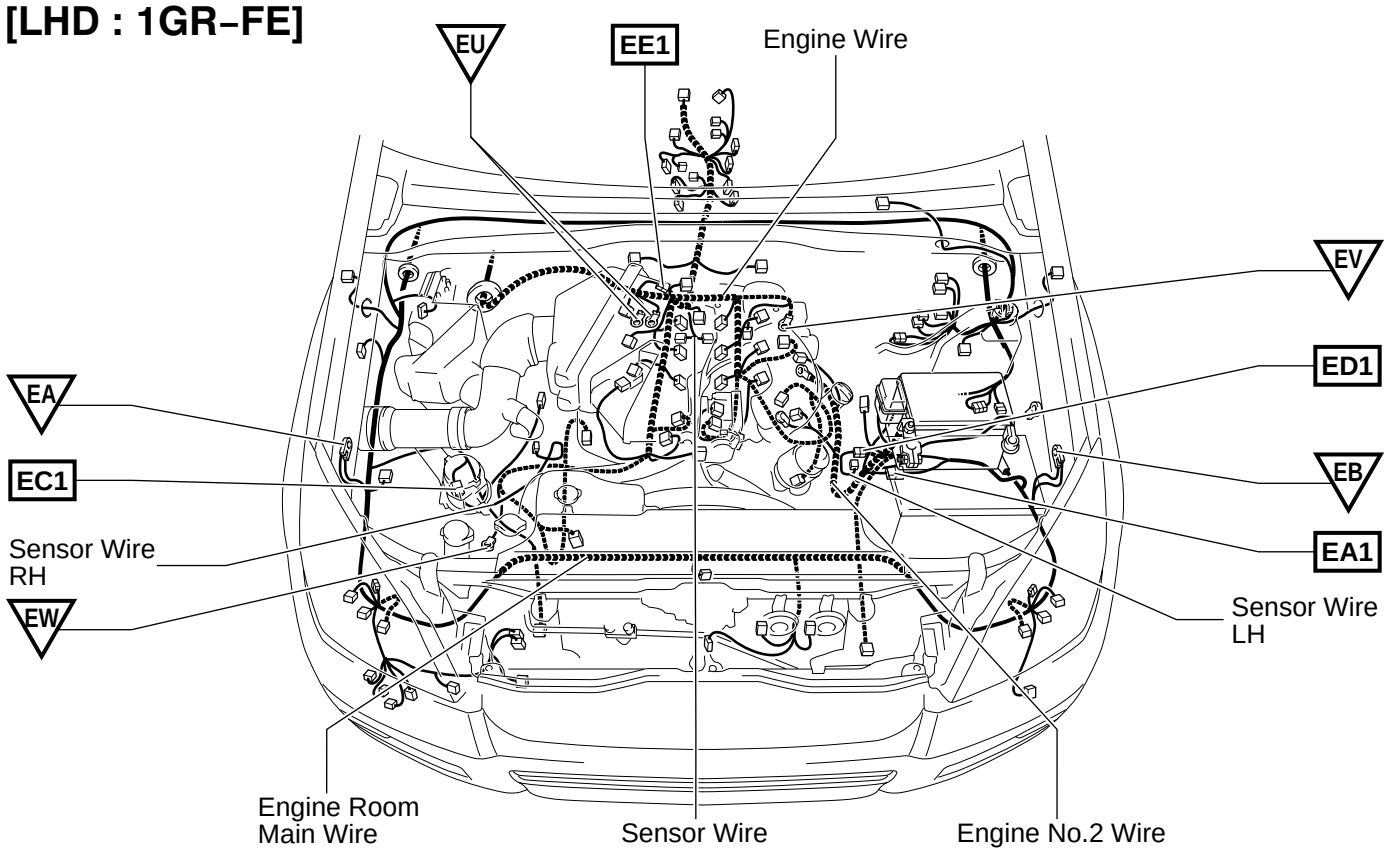

⬡ : Location of Splice Points

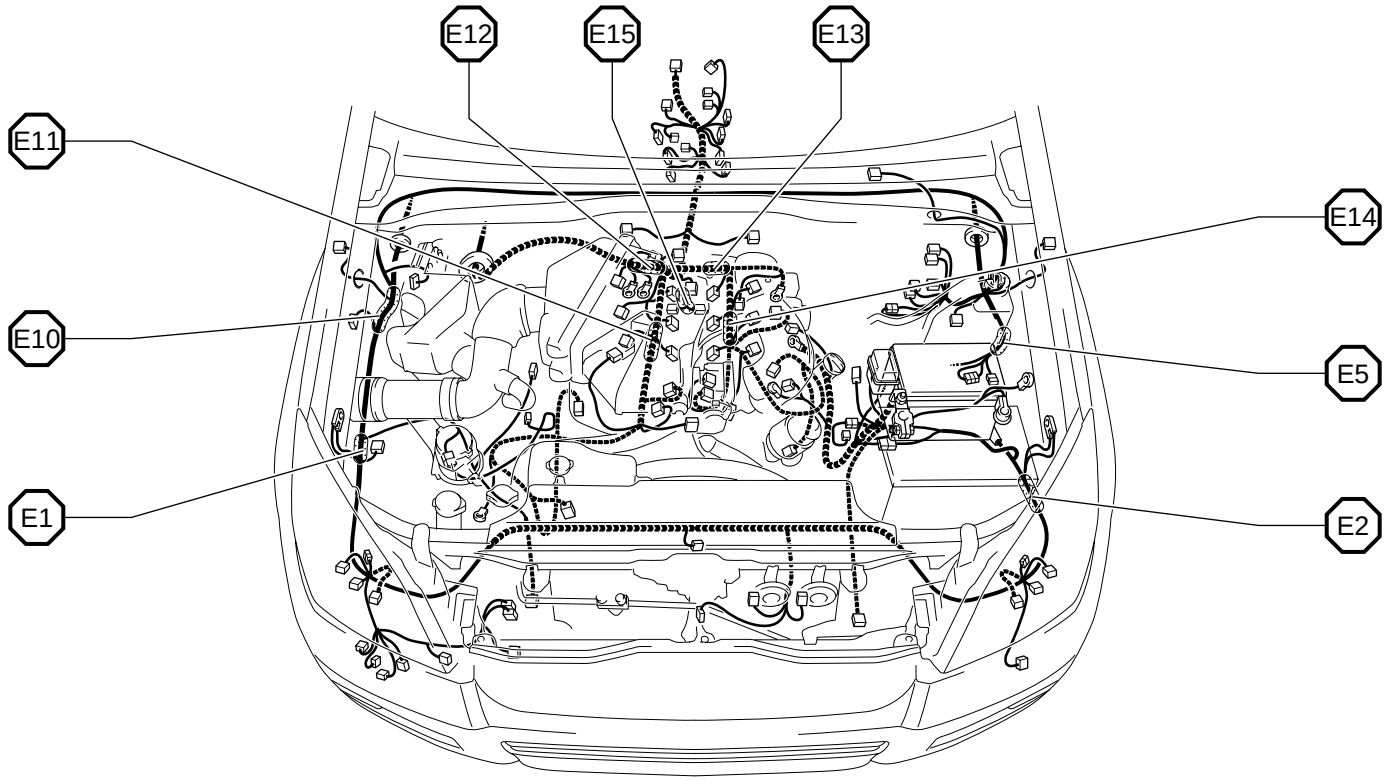

Connector Joining Wire Harness and Wire Harness

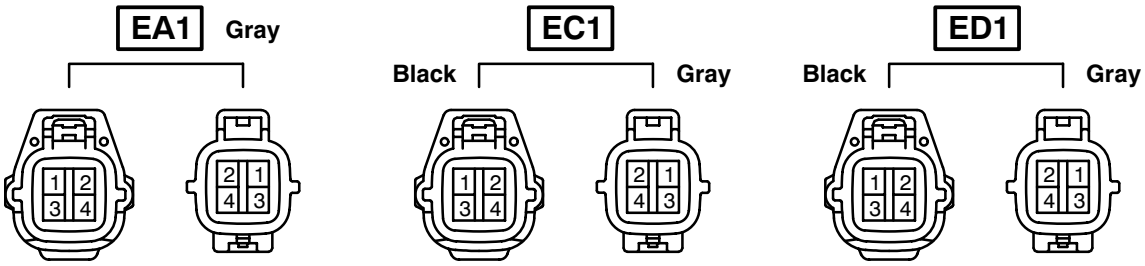

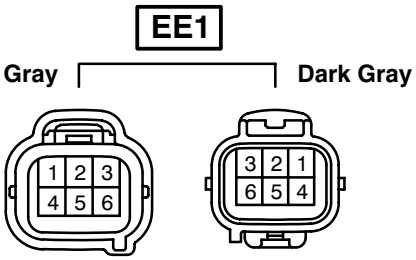

Code	Joining Wire Harness and Wire Harness (Connector Location)
EA1	Engine No.2 Wire and Engine Room Main Wire (Near the Engine Room R/B)
EC1	Sensor Wire RH and Engine Room Main Wire (Near the Air Cleaner)
ED1	Sensor Wire LH and Engine Room Main Wire (Naer the Engine Room R/B)
EE1	Engine Wire and Sensor Wire (Behind the Cylinder Head RH)

▭ : Location of Connector Joining Wire Harness and Wire Harness

▽ : Location of Ground Points

[LHD : 3RZ–FE]

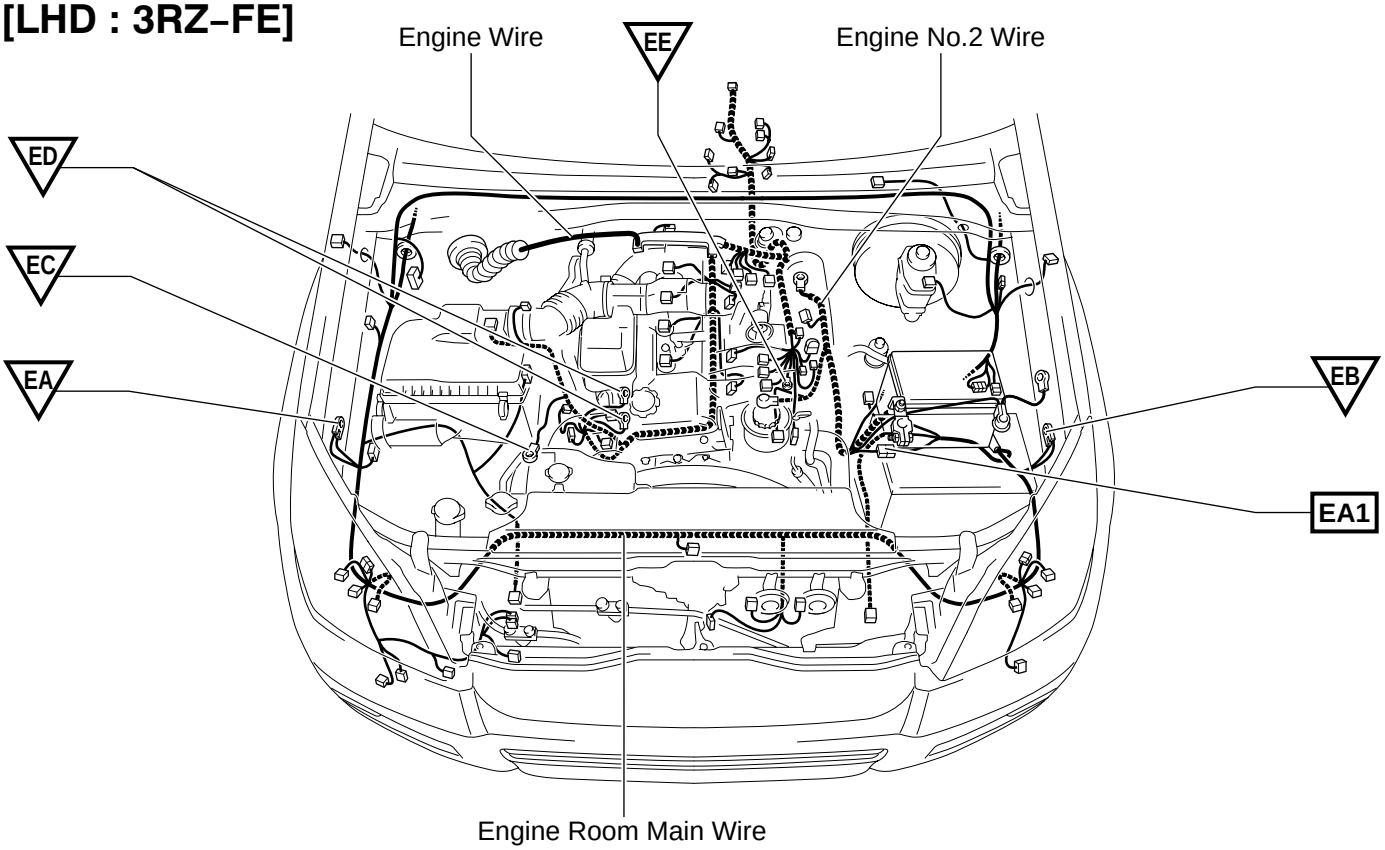

⬡ : Location of Splice Points

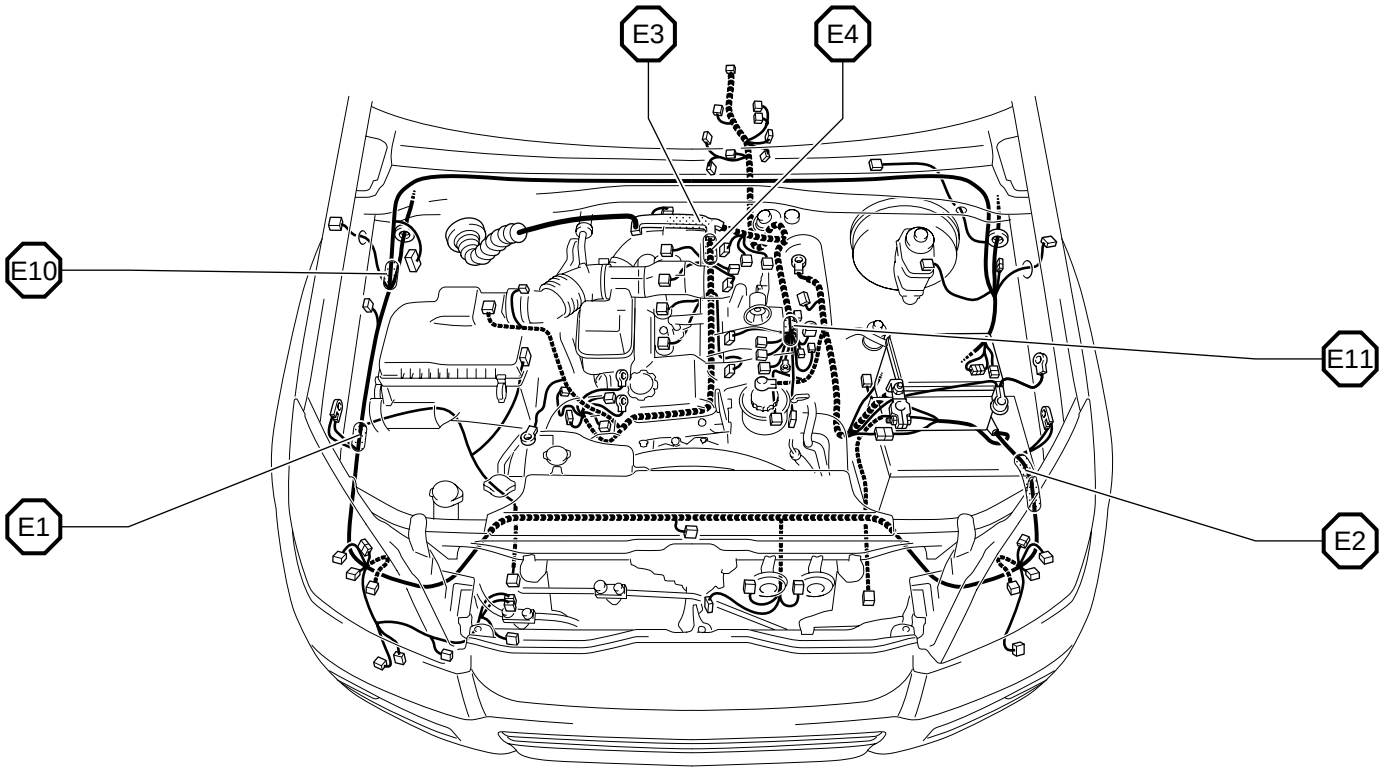

Connector Joining Wire Harness and Wire Harness

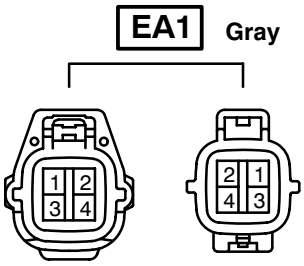

Code	Joining Wire Harness and Wire Harness (Connector Location)
EA1	Engine No.2 Wire and Engine Room Main Wire (Near the Engine Room R/B)

▭ : Location of Connector Joining Wire Harness and Wire Harness

▽ : Location of Ground Points

[LHD : 1KD–FTV]

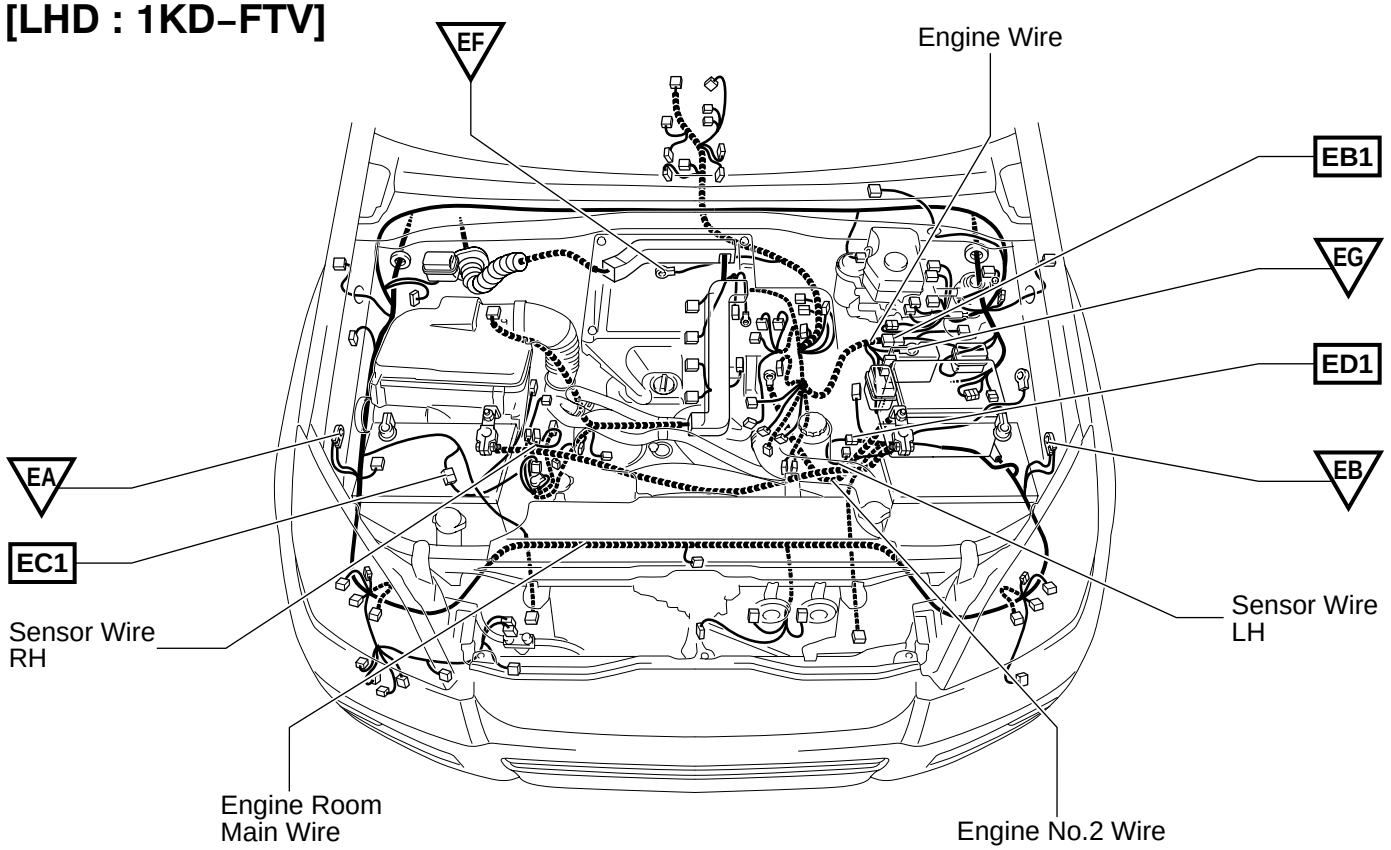

⬡ : Location of Splice Points

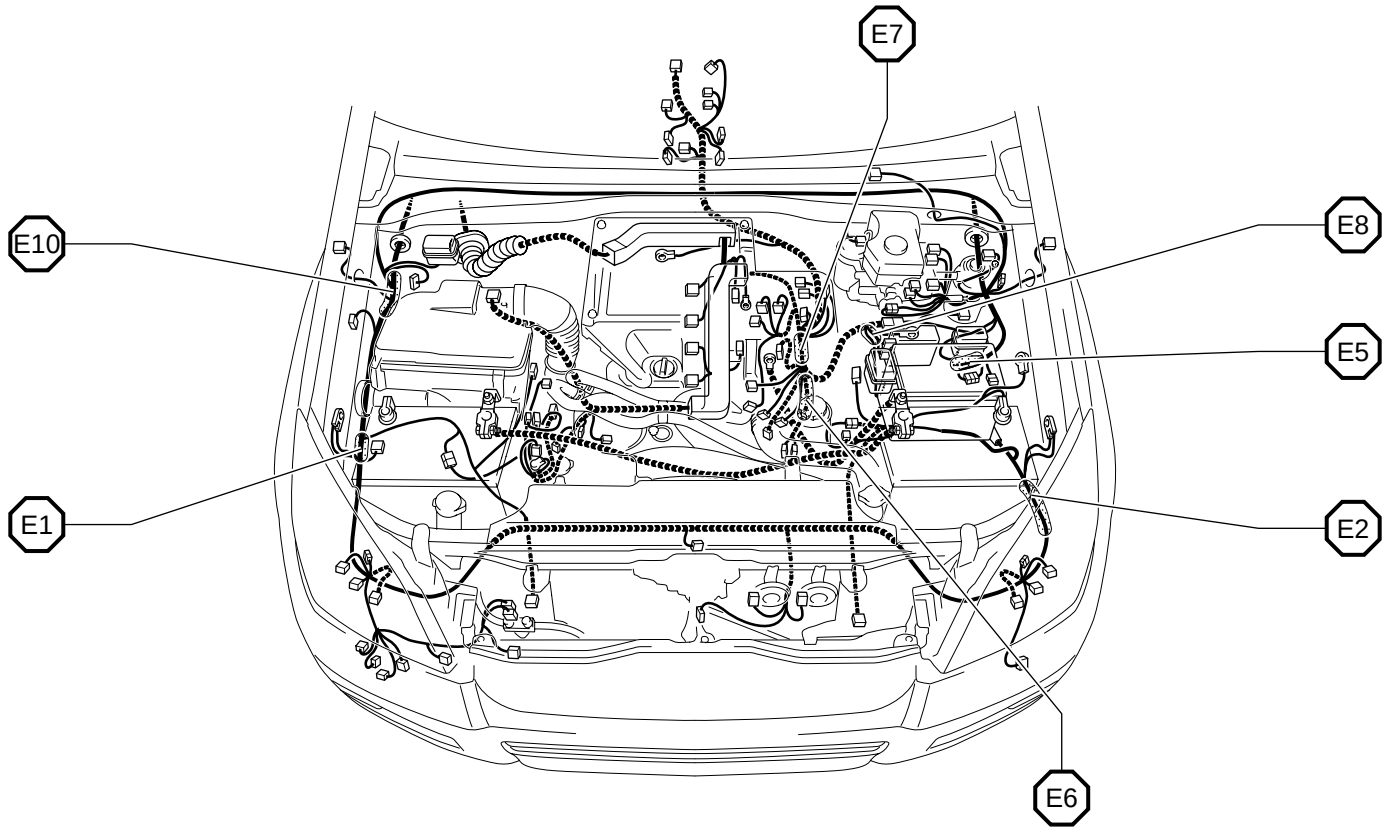

Connector Joining Wire Harness and Wire Harness

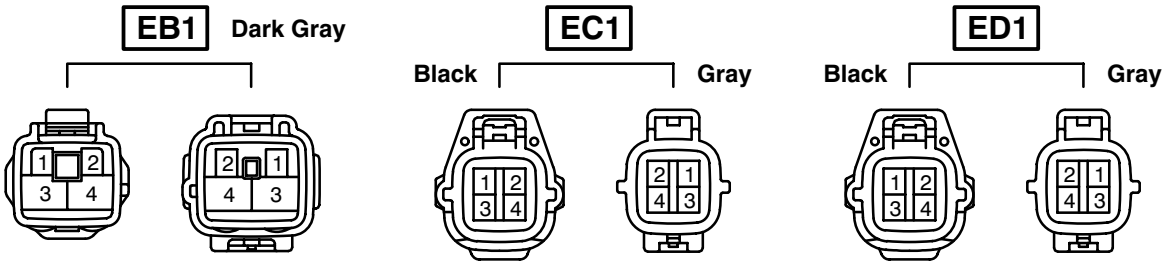

Code	Joining Wire Harness and Wire Harness (Connector Location)
EB1	Engine Room Main Wire and Engine Wire (Rear Side of the Engine Room R/B)
EC1	Sensor Wire RH and Engine Room Main Wire (Near the Air Cleaner)
ED1	Sensor Wire LH and Engine Room Main Wire (Near the Engine Room R/B)

▭ : Location of Connector Joining Wire Harness and Wire Harness

▽ : Location of Ground Points

[LHD : 1KZ–TE]

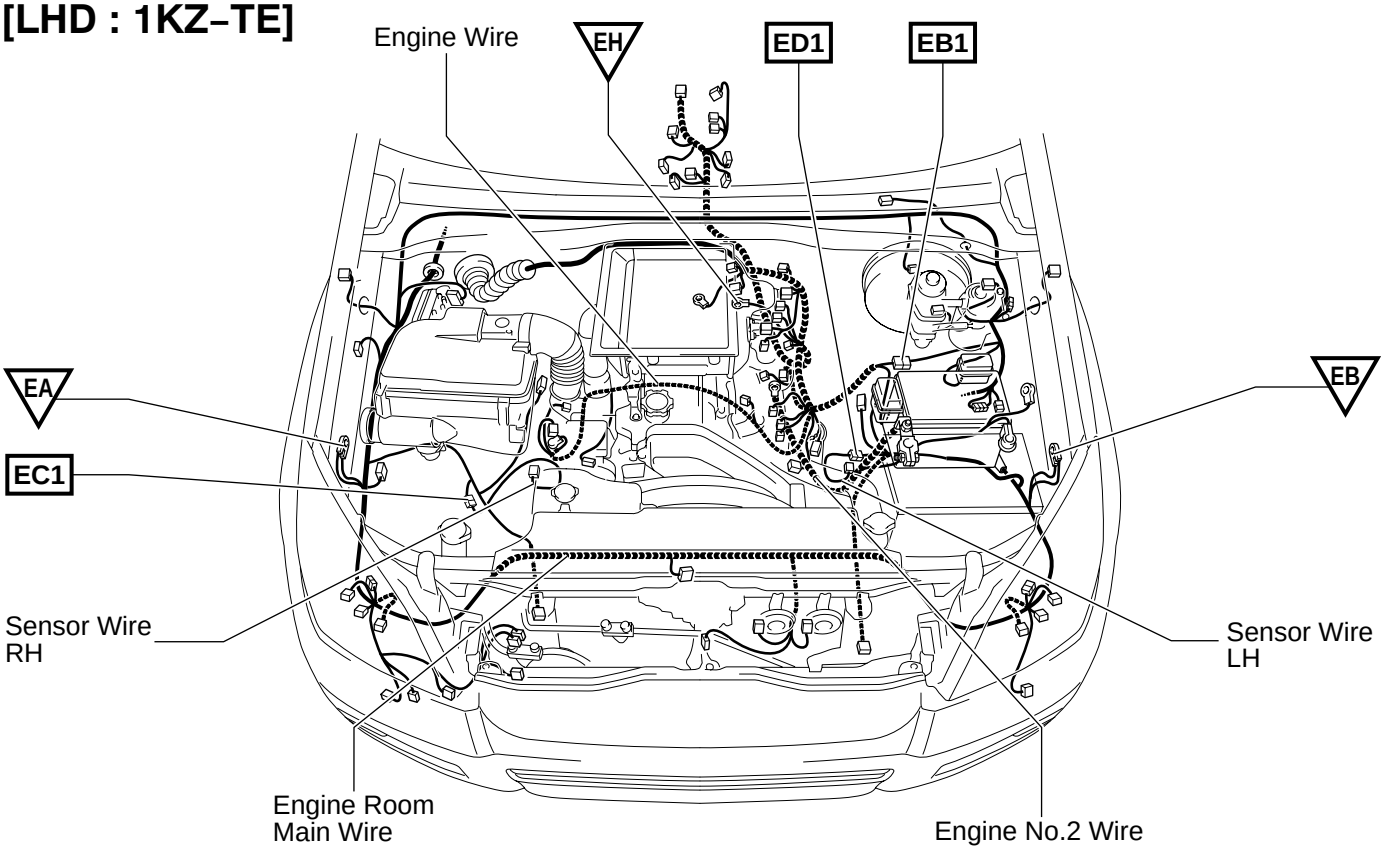

⬡ : Location of Splice Points

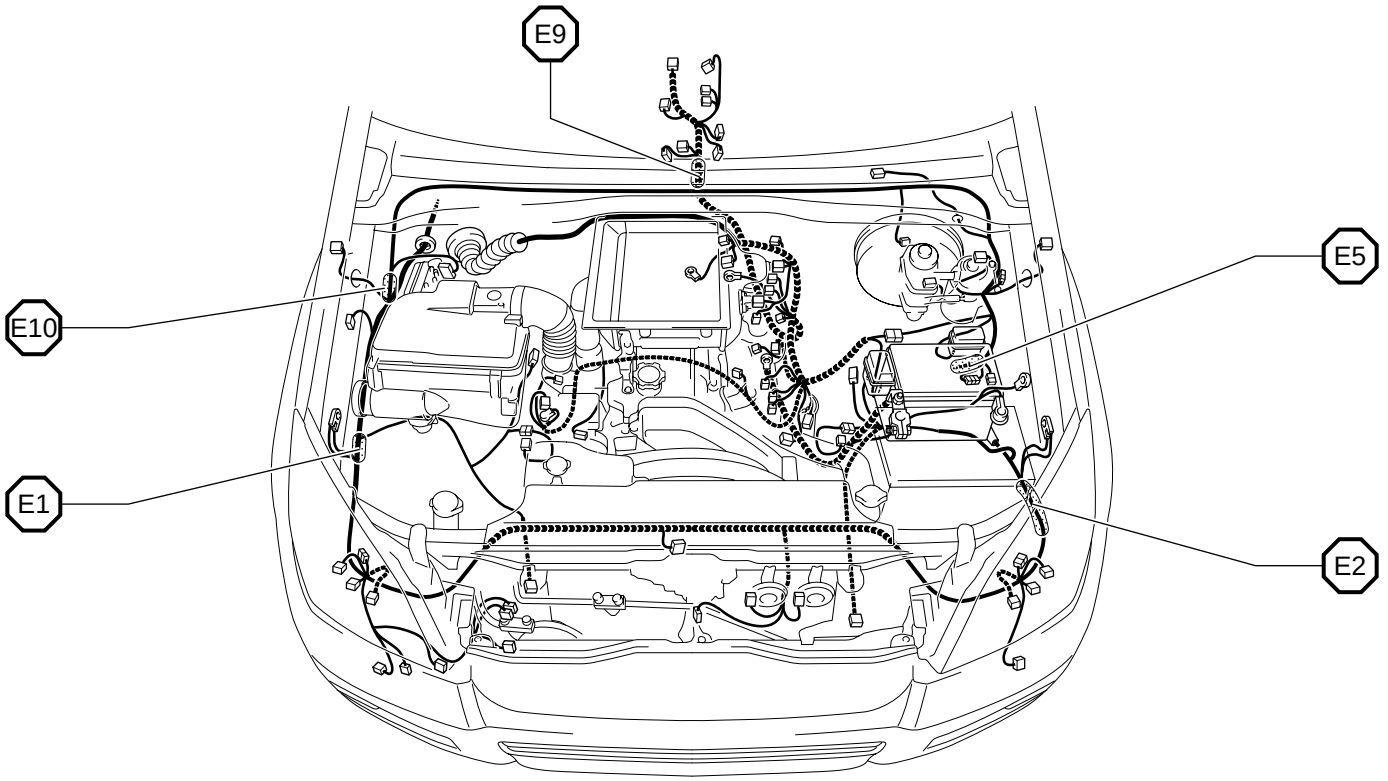

Connector Joining Wire Harness and Wire Harness

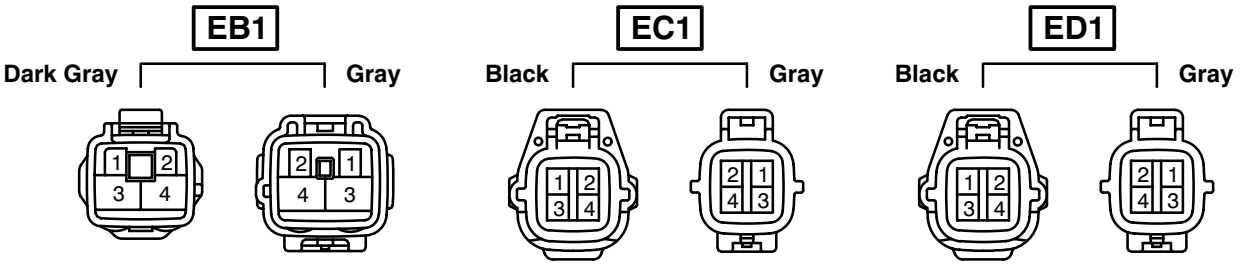

Code	Joining Wire Harness and Wire Harness (Connector Location)
EB1	Engine Room Main Wire and Engine Wire (Rear Side of the Engine Room R/B)
EC1	Sensor Wire RH and Engine Room Main Wire (Near the Air Cleaner)
ED1	Sensor Wire LH and Engine Room Main Wire (Near the Engine Room R/B)

▭ : Location of Connector Joining Wire Harness and Wire Harness

▽ : Location of Ground Points

[LHD : 5L–E]

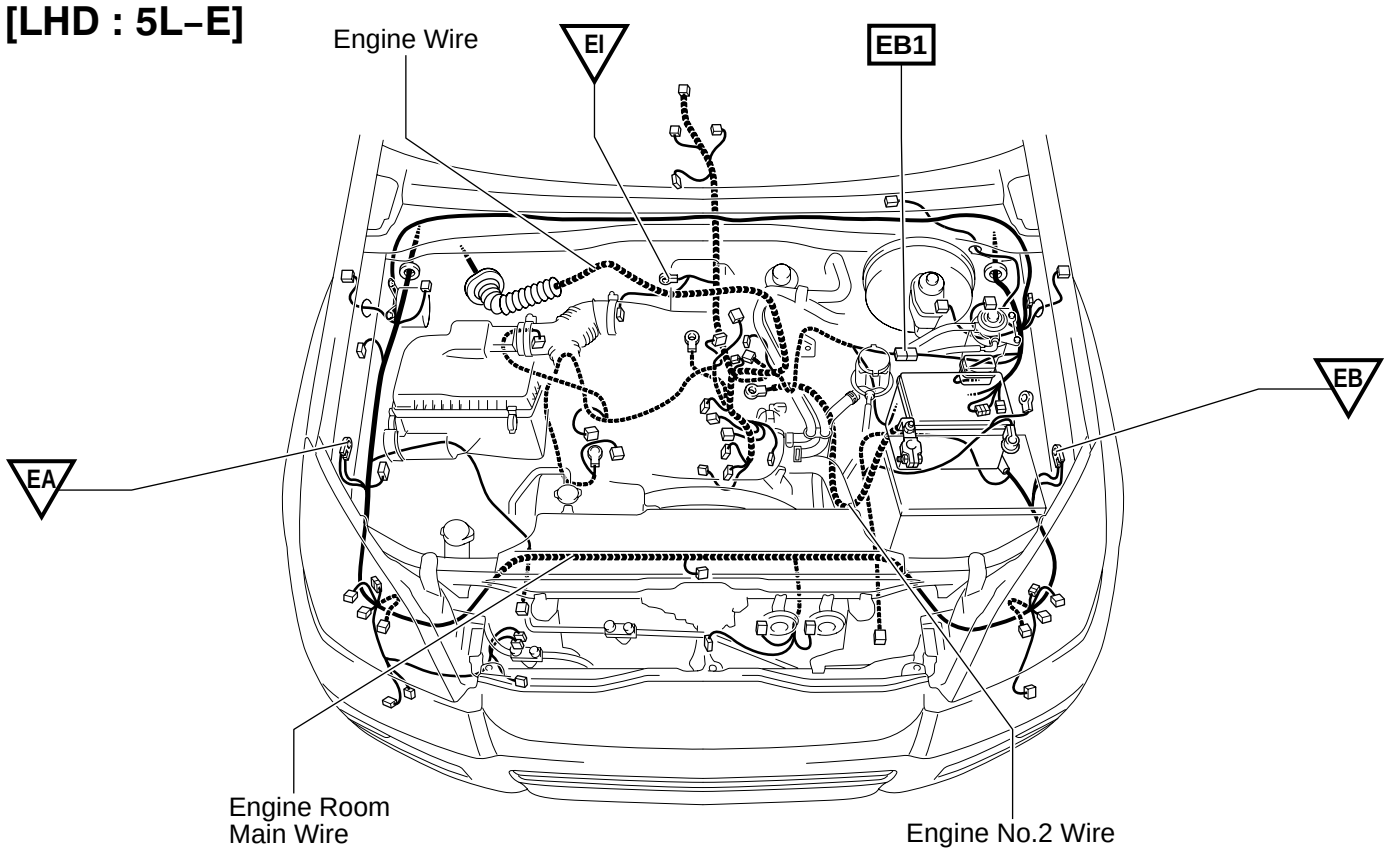

⬡ : Location of Splice Points

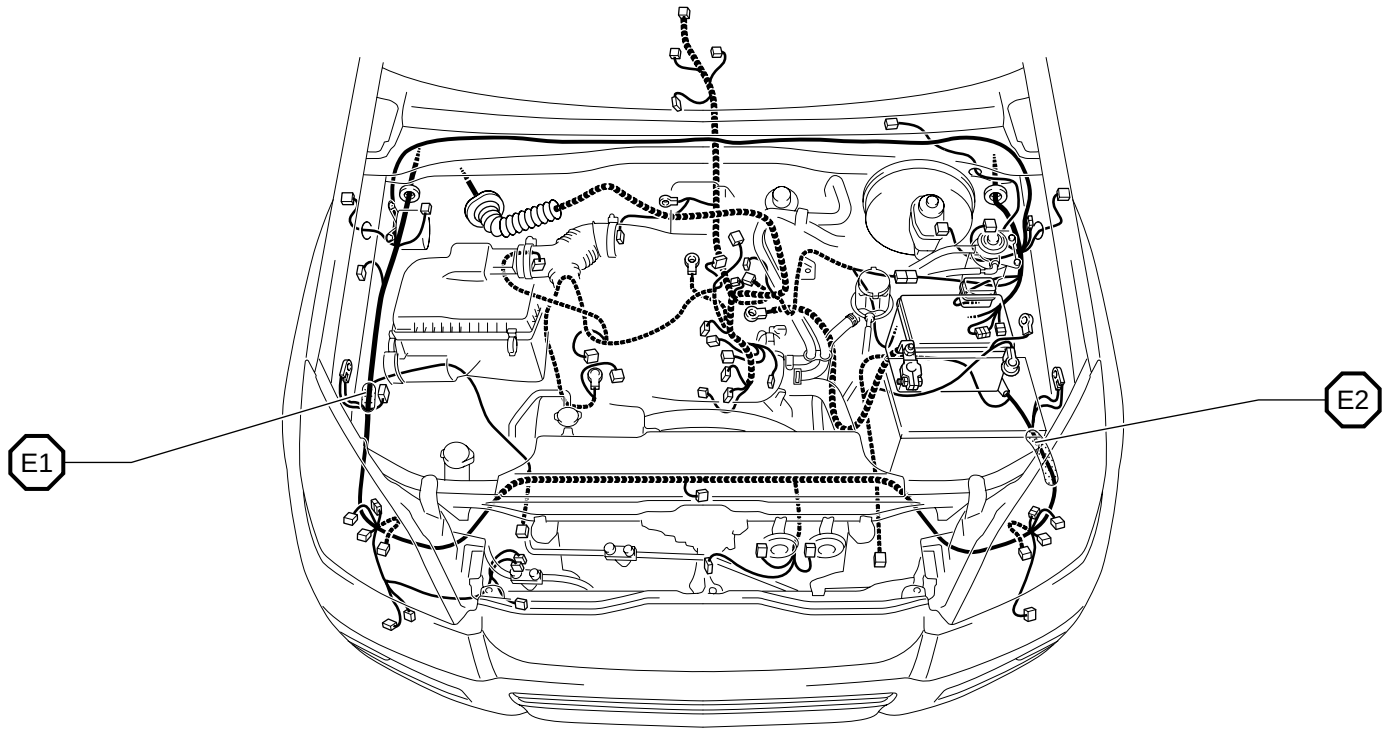

Connector Joining Wire Harness and Wire Harness

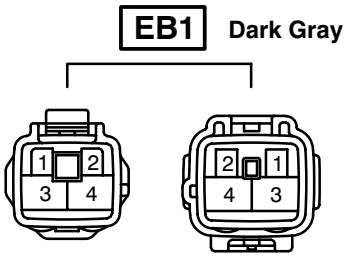

Code	Joining Wire Harness and Wire Harness (Connector Location)
EB1	Engine Room Main Wire and Engine Wire (Rear Side of the Engine Room R/B)

▭ : Location of Connector Joining Wire Harness and Wire Harness

[LHD]

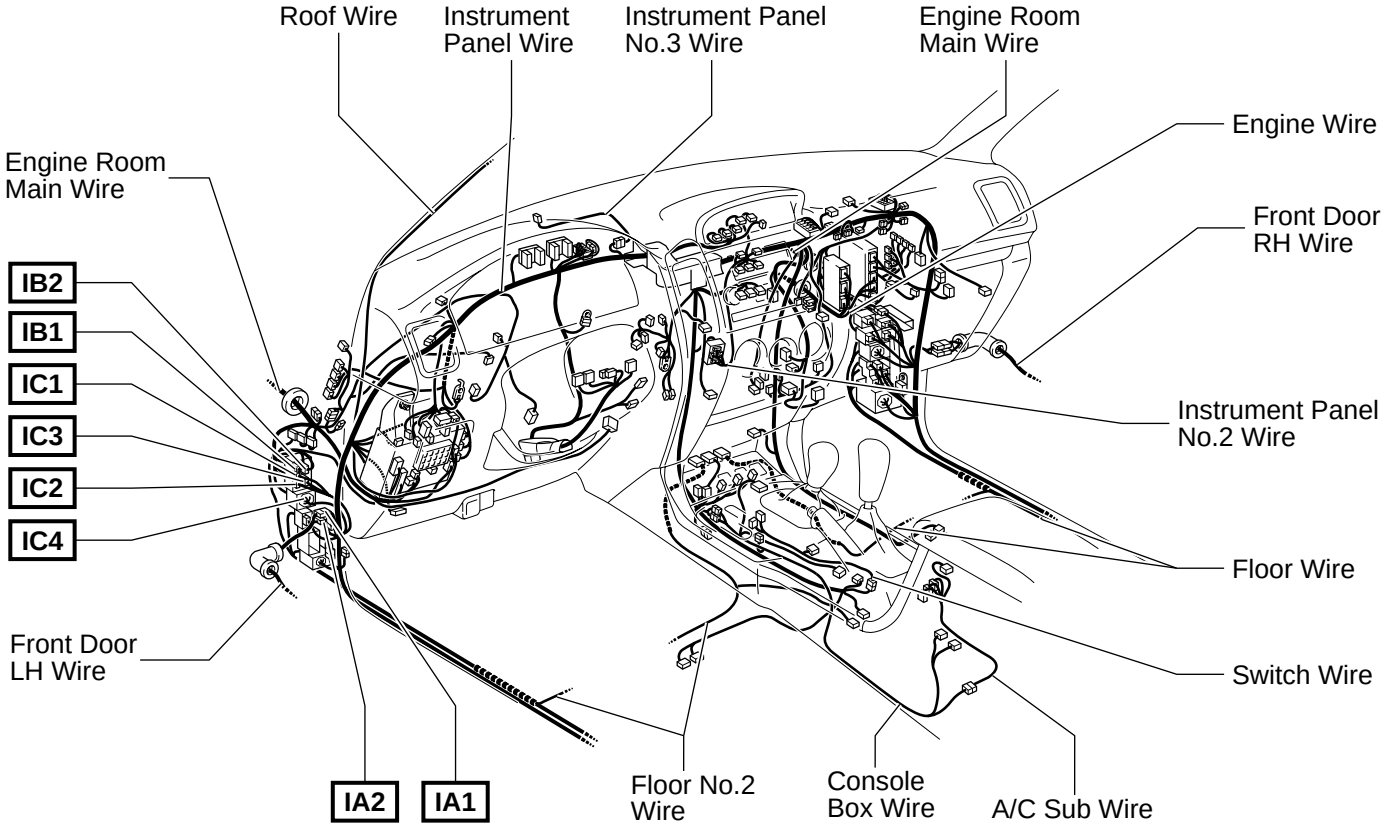

▽ : Location of Ground Points

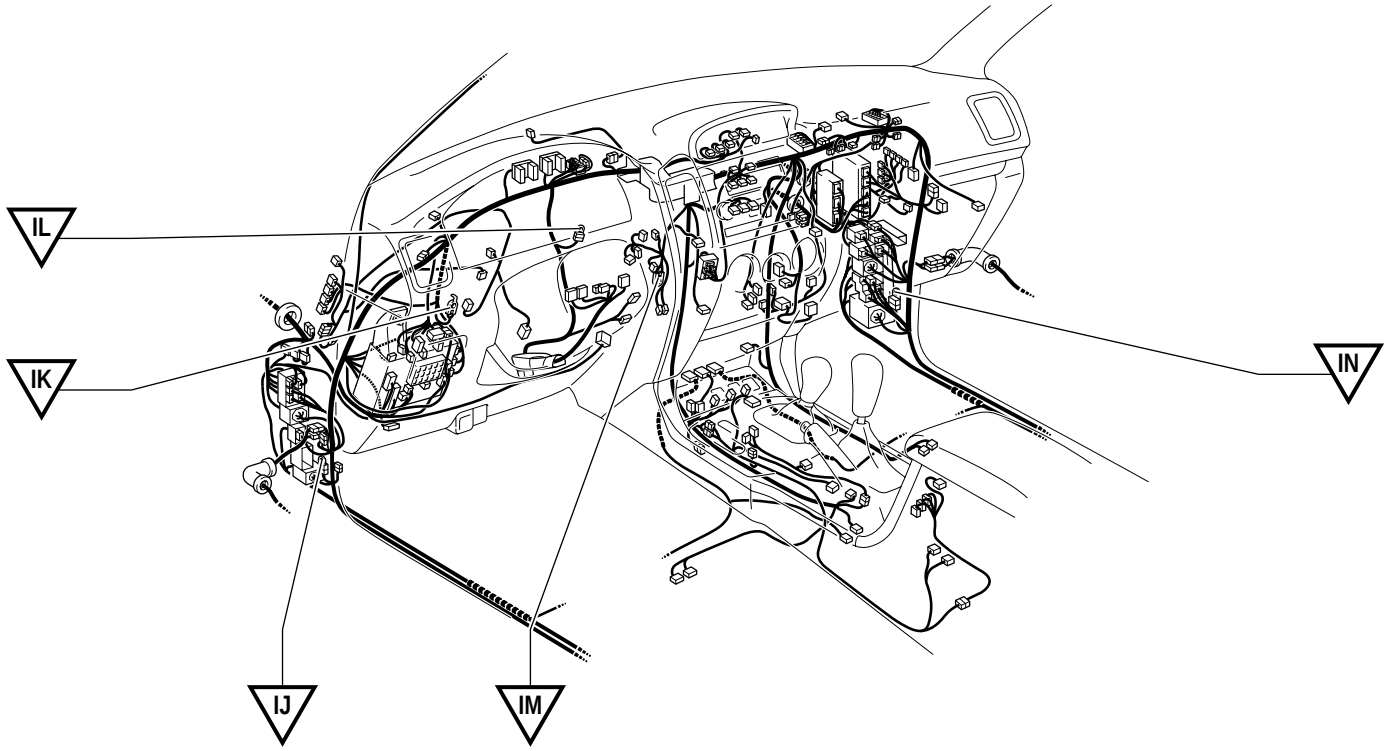

Connector Joining Wire Harness and Wire Harness

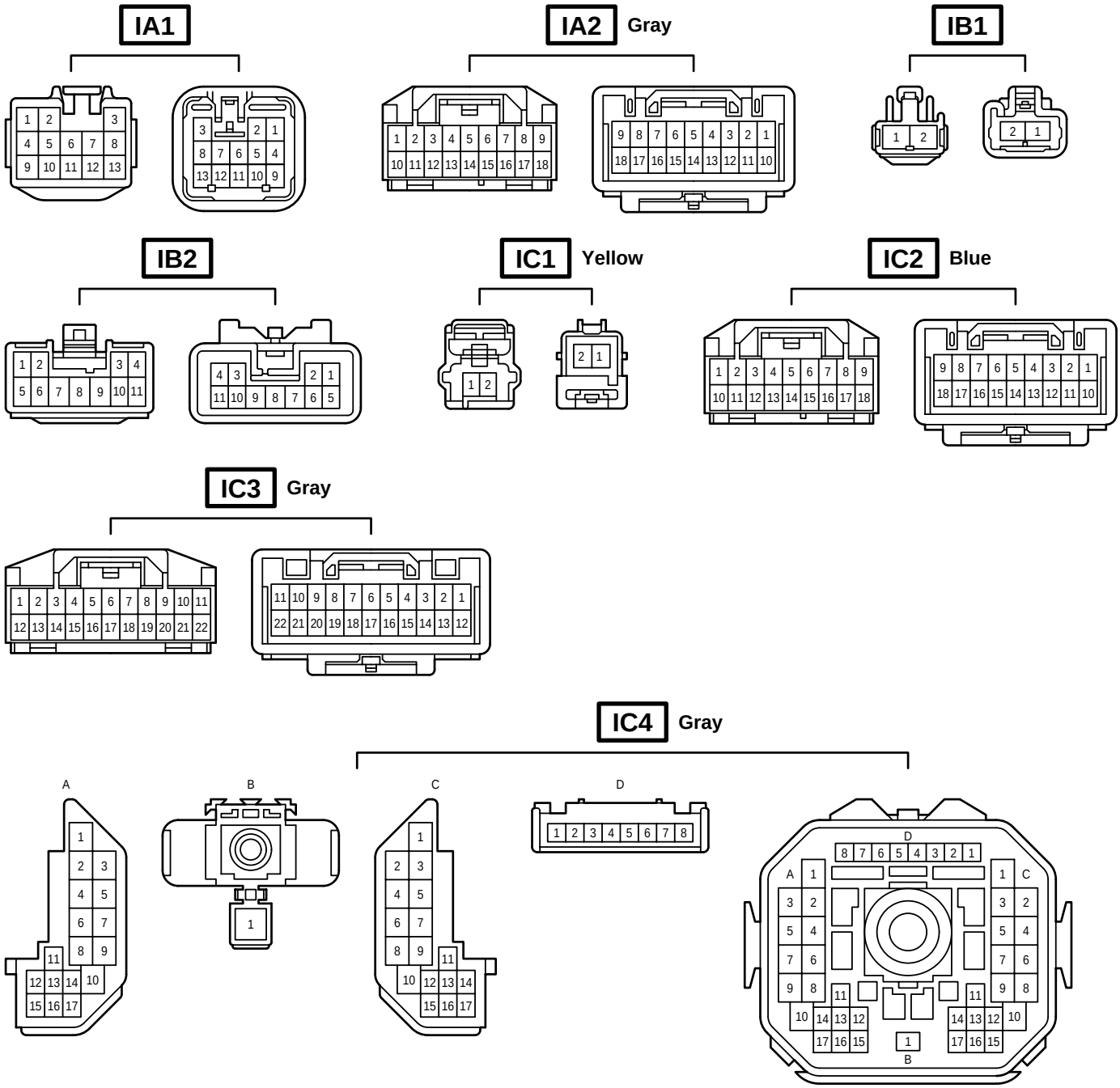

Code	Joining Wire Harness and Wire Harness (Connector Location)
IA1	Front Door LH Wire and Instrument Panel Wire (Left Kick Panel)
IA2	
IB1	Floor No.2 Wire and Engine Room Main Wire (Left Kick Panel)
IB2	
IC1	Instrument Panel Wire and Engine Room Main Wire (Left Kick Panel)
IC2	
IC3	
IC4	

▭ : Location of Connector Joining Wire Harness and Wire Harness

[LHD]

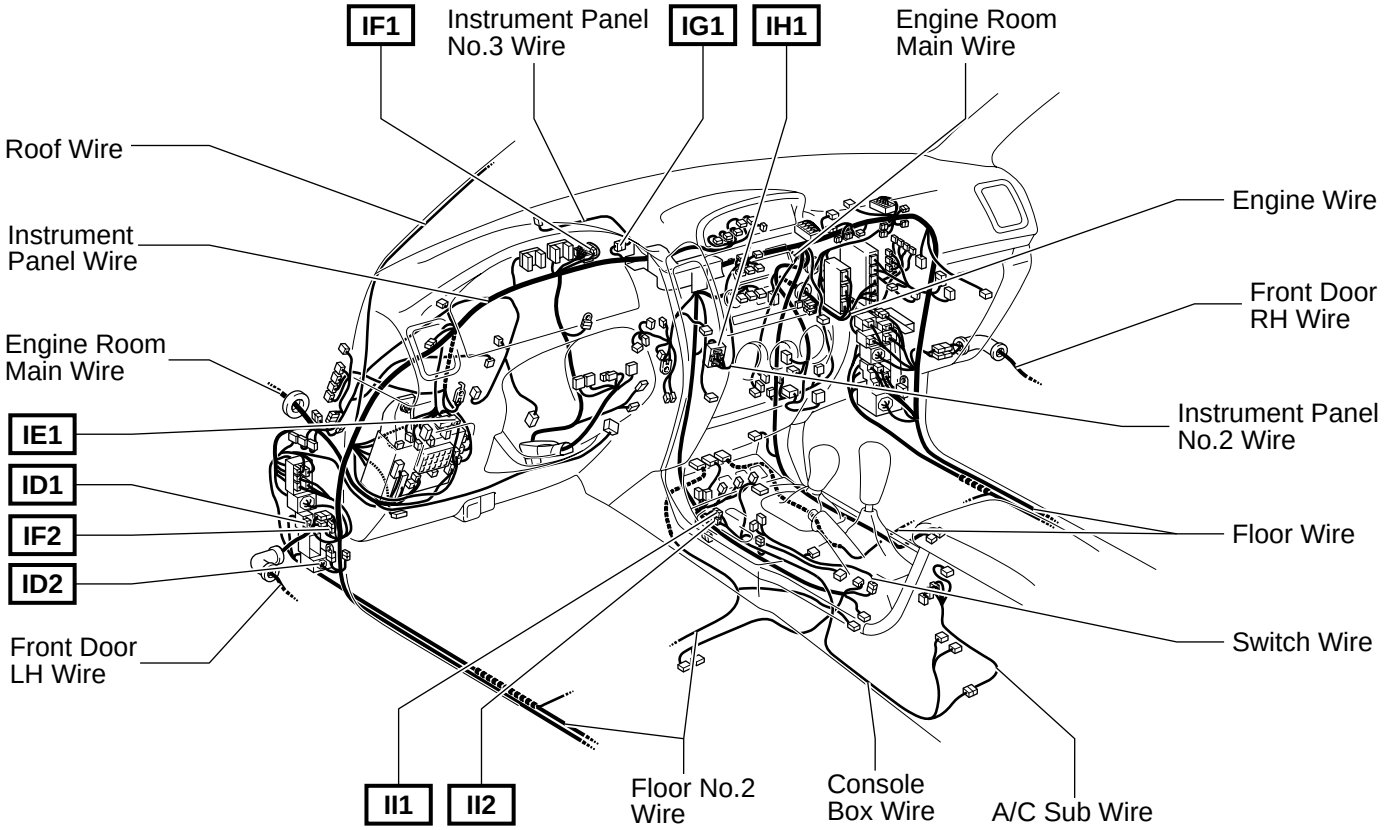

⬡ : Location of Splice Points

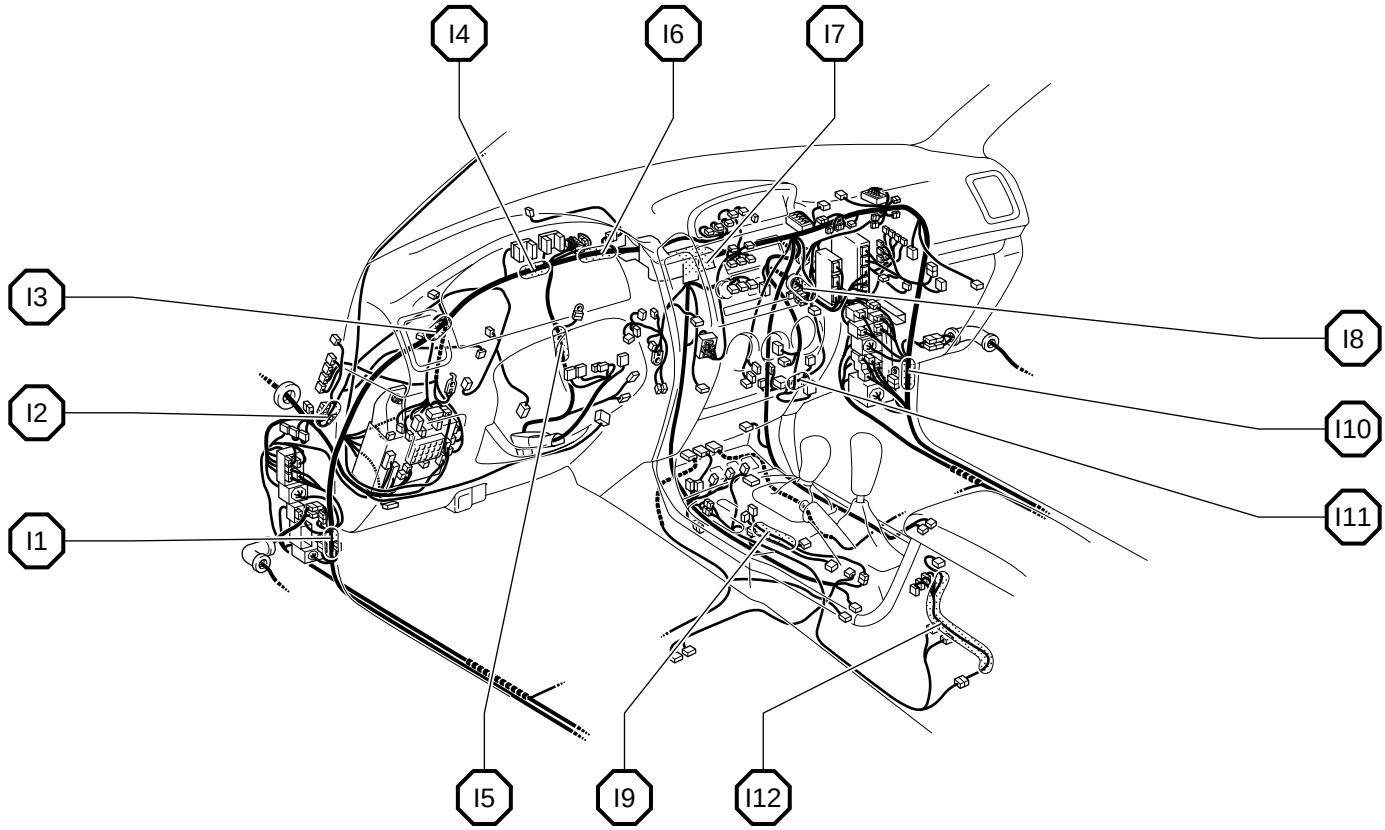

Connector Joining Wire Harness and Wire Harness

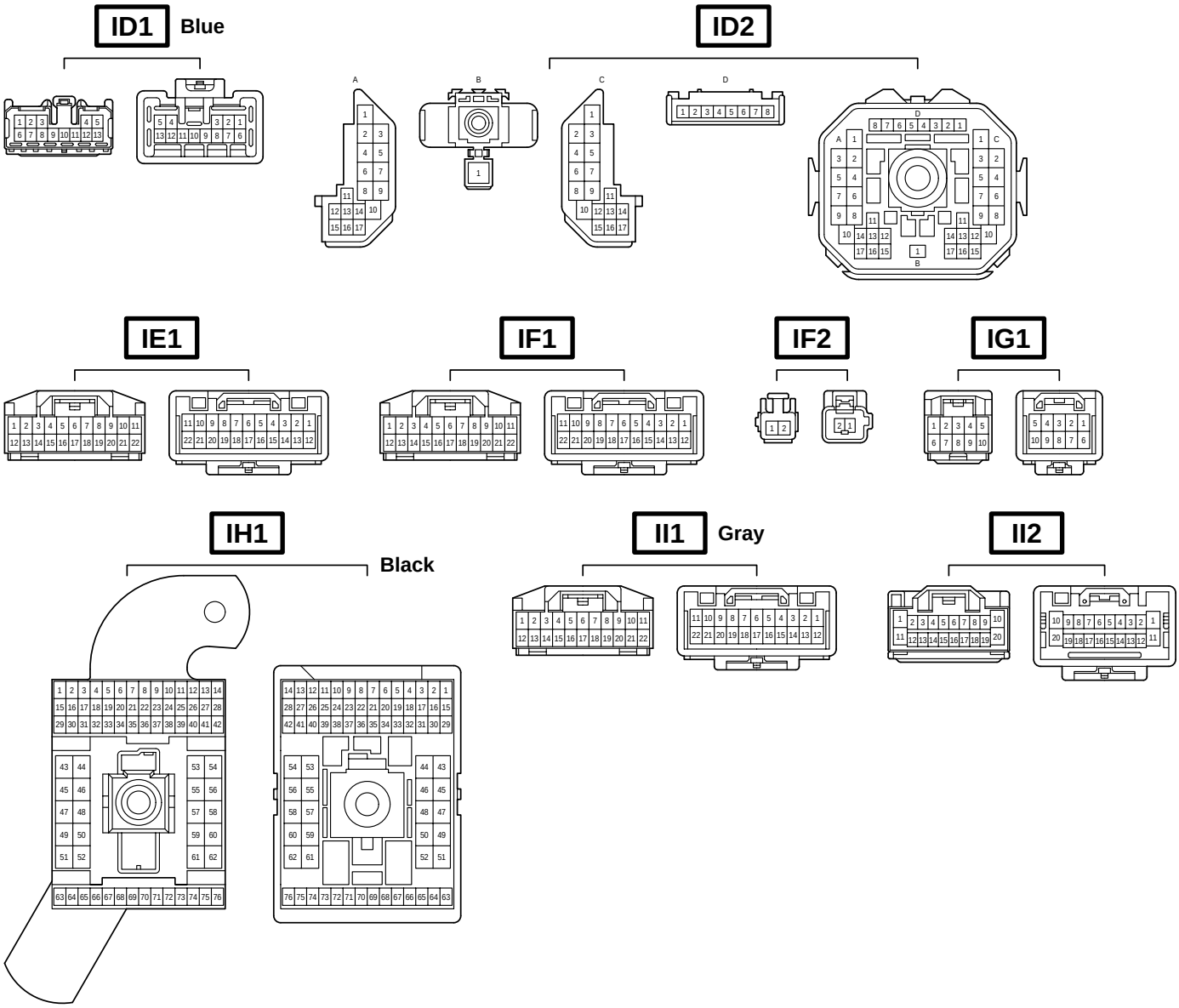

Code	Joining Wire Harness and Wire Harness (Connector Location)
ID1	Instrument Panel Wire and Floor No.2 Wire (Left Kick Panel)
ID2	
IE1	Roof Wire and Instrument Panel Wire (Upper the Driver Side J/B)
IF1	Instrument Panel Wire and Instrument Panel Wire (Near the Center J/B No.1)
IF2	Instrument Panel Wire and Instrument Panel Wire (Left Kick Panel)
IG1	Instrument Panel No.3 Wire and Instrument Panel Wire (Near the Combination Meter)
IH1	Instrument Panel Wire and Instrument Panel No.2 Wire (Instrument Panel Brace LH)
II1	Console Box Wire and Instrument Panel Wire (Under the Instrument Panel Brace LH)
II2	

▭ : Location of Connector Joining Wire Harness and Wire Harness

[LHD]

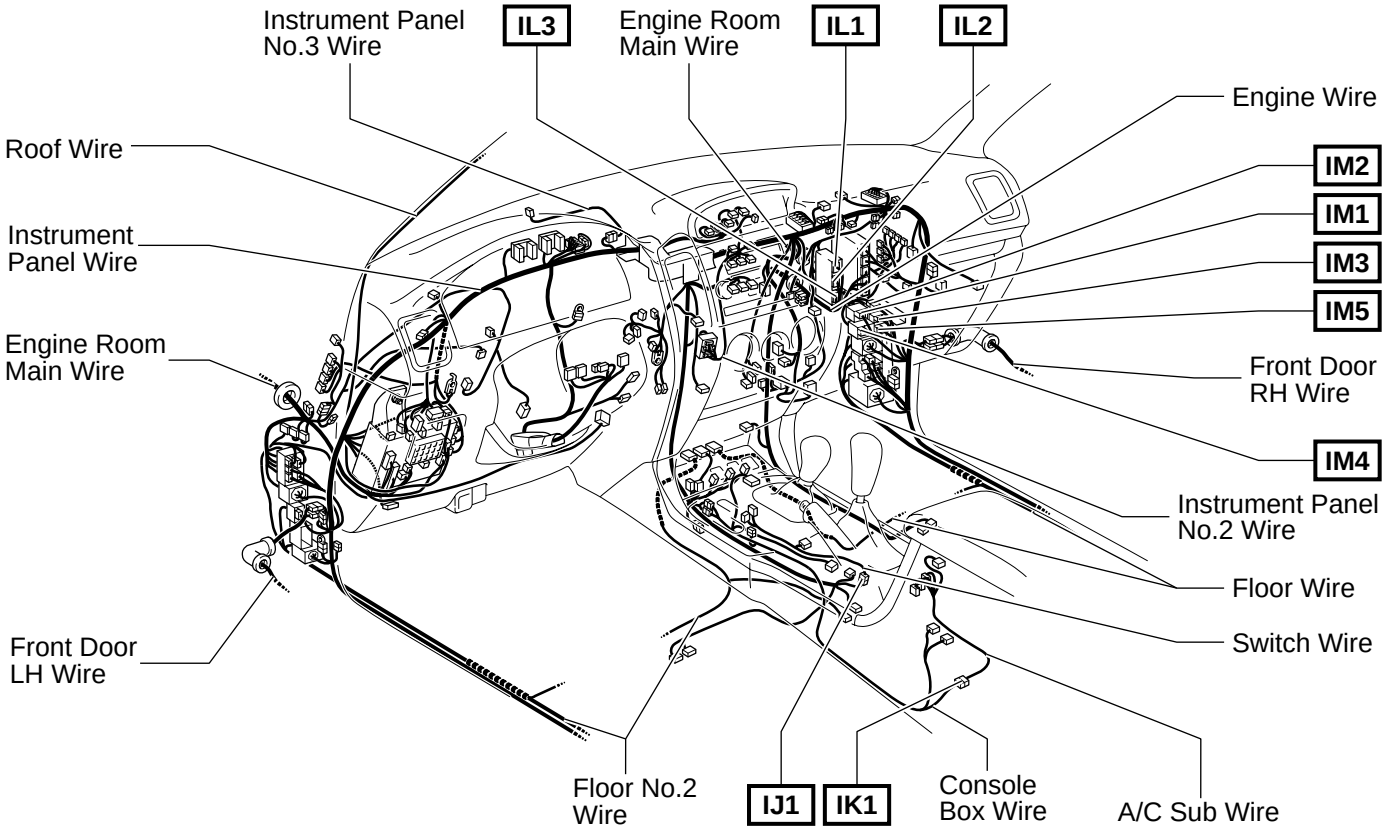

Connector Joining Wire Harness and Wire Harness

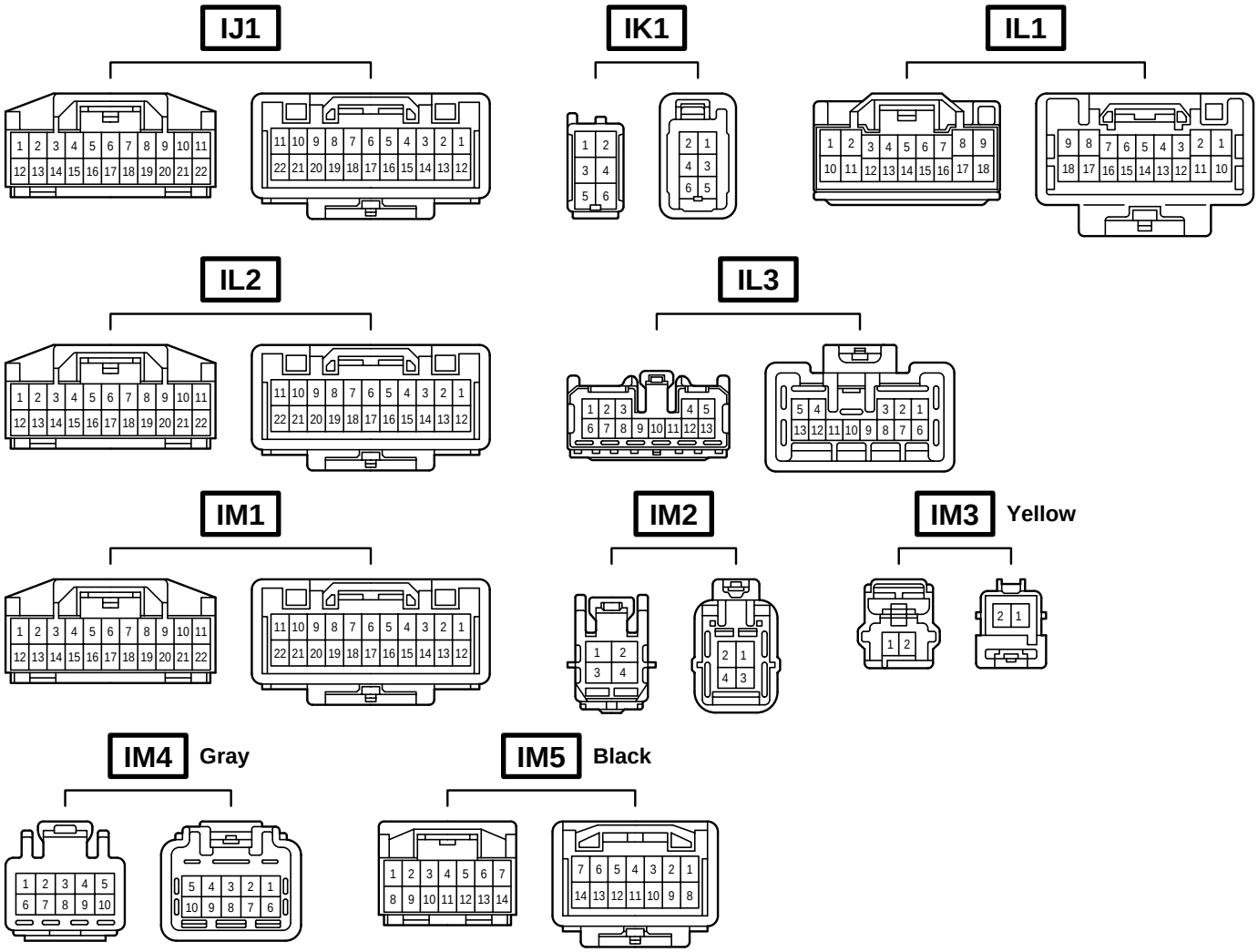

Code	Joining Wire Harness and Wire Harness (Connector Location)
IJ1	Instrument Panel Wire and Switch Wire (Front Side of the Console Box)
IK1	Console Box Wire and A/C Sub Wire (Rear Side of the Console Box)
IL1	Engine Wire and Instrument Panel Wire (Right Side of the Blower Unit)
IL2	
IL3	
IM1	Instrument Panel Wire and Engine Room Main Wire (Right Kick Panel)
IM2	
IM3	
IM4	
IM5	

▭ : Location of Connector Joining Wire Harness and Wire Harness

[LHD]

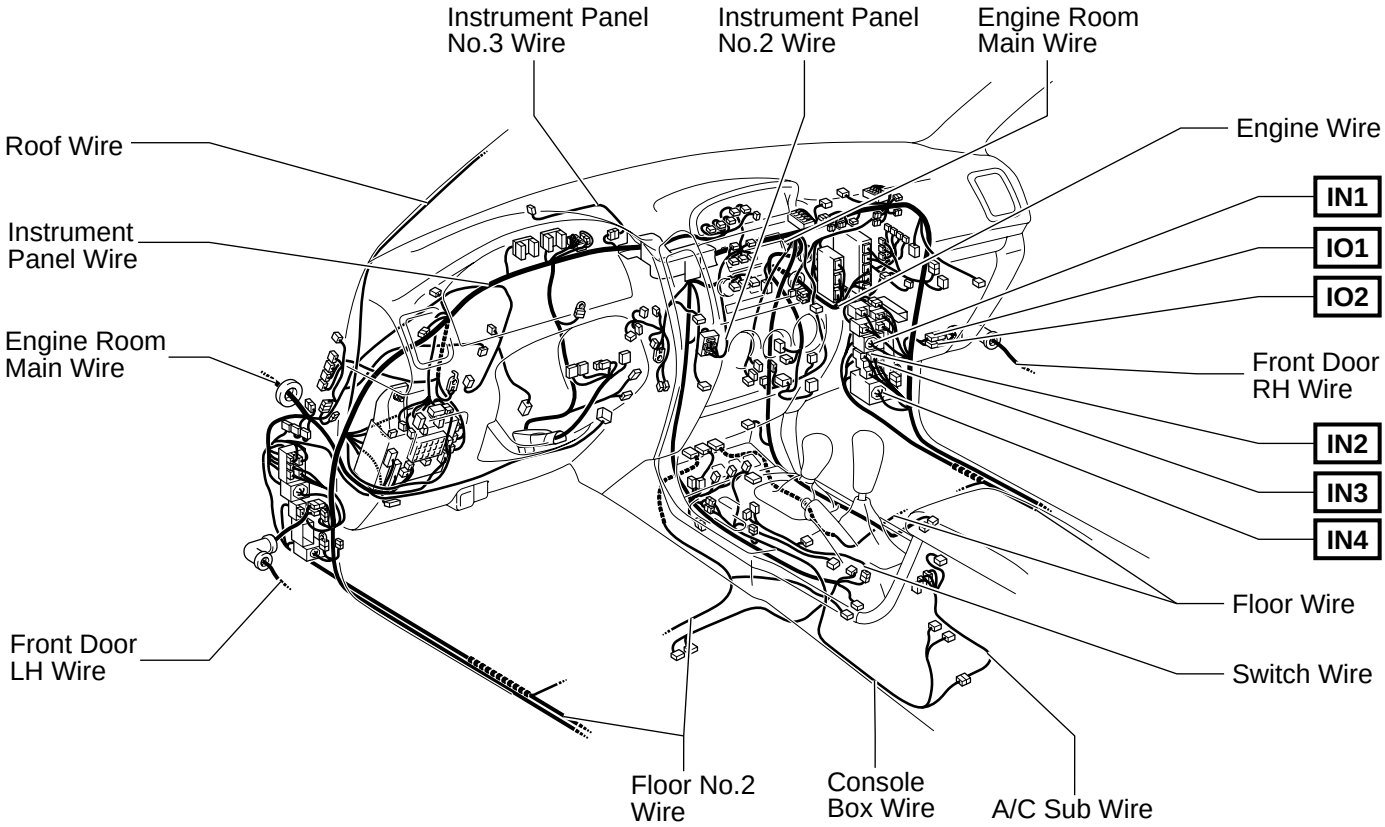

Connector Joining Wire Harness and Wire Harness

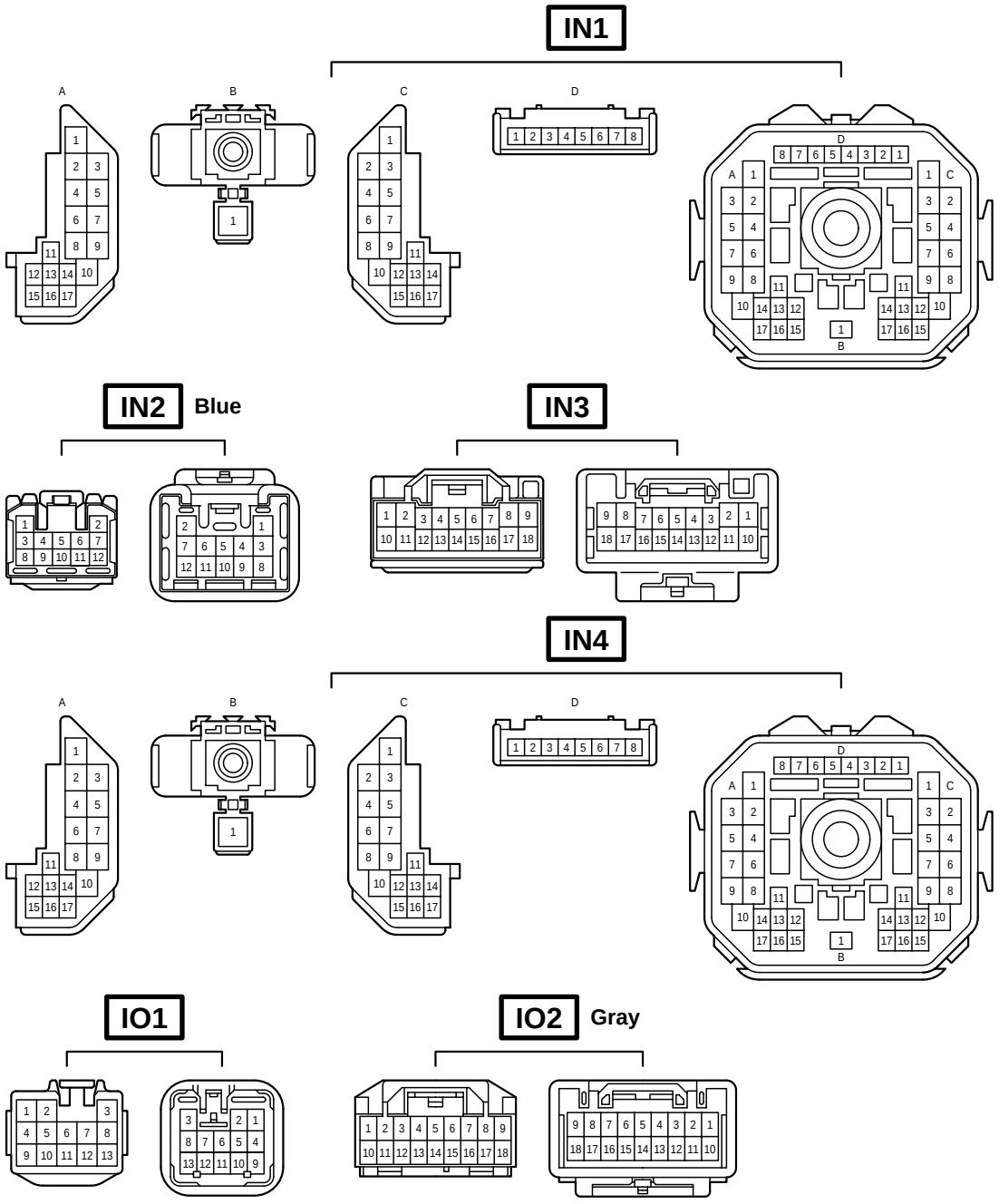

Code	Joining Wire Harness and Wire Harness (Connector Location)
IN1	Instrument Panel Wire and Floor Wire (Right Kick Panel)
IN2	
IN3	
IN4	
IO1	Front Door RH Wire and Instrument Panel Wire (Right Kick Panel)
IO2	

▭ : Location of Connector Joining Wire Harness and Wire Harness

[LHD : 5–Door]

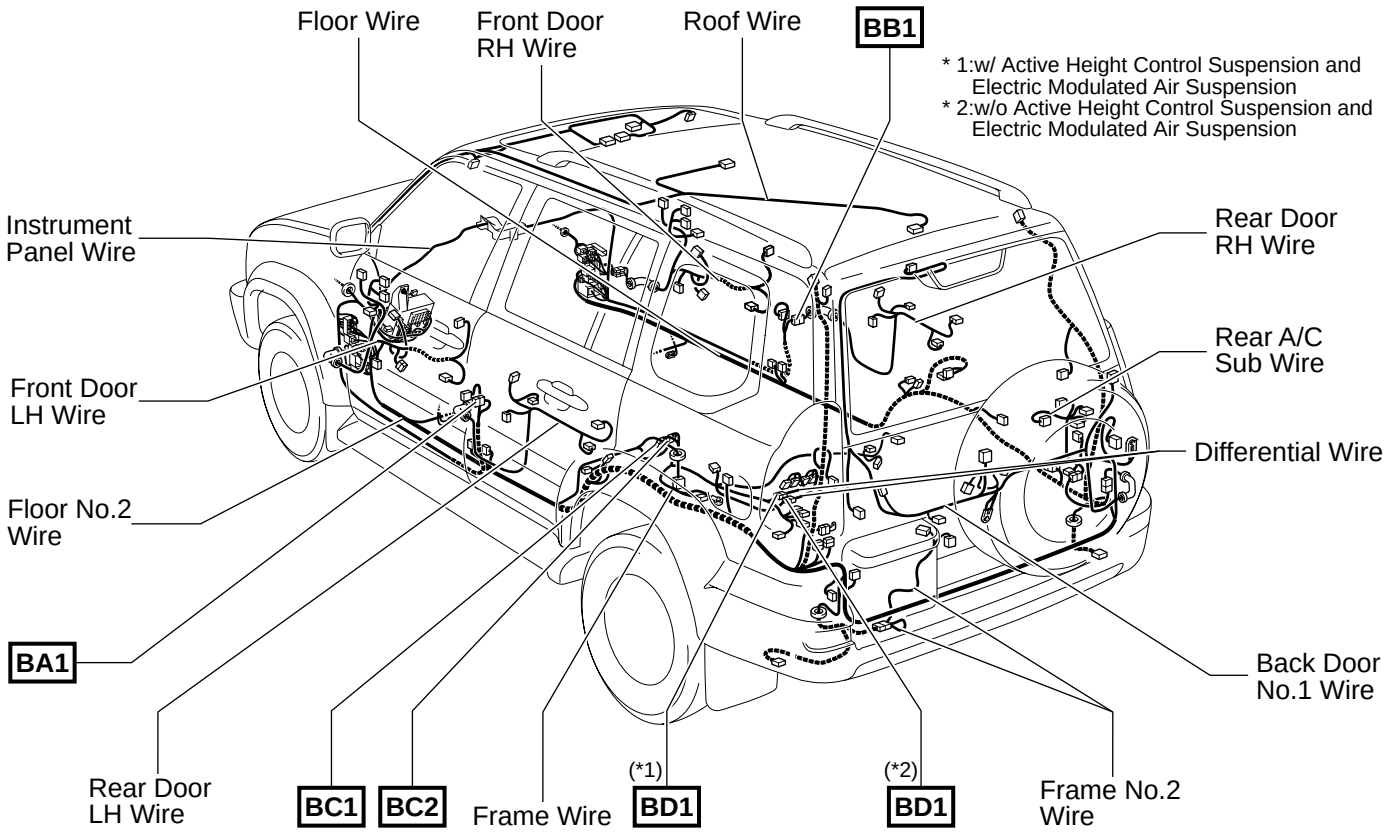

▽ : Location of Ground Points

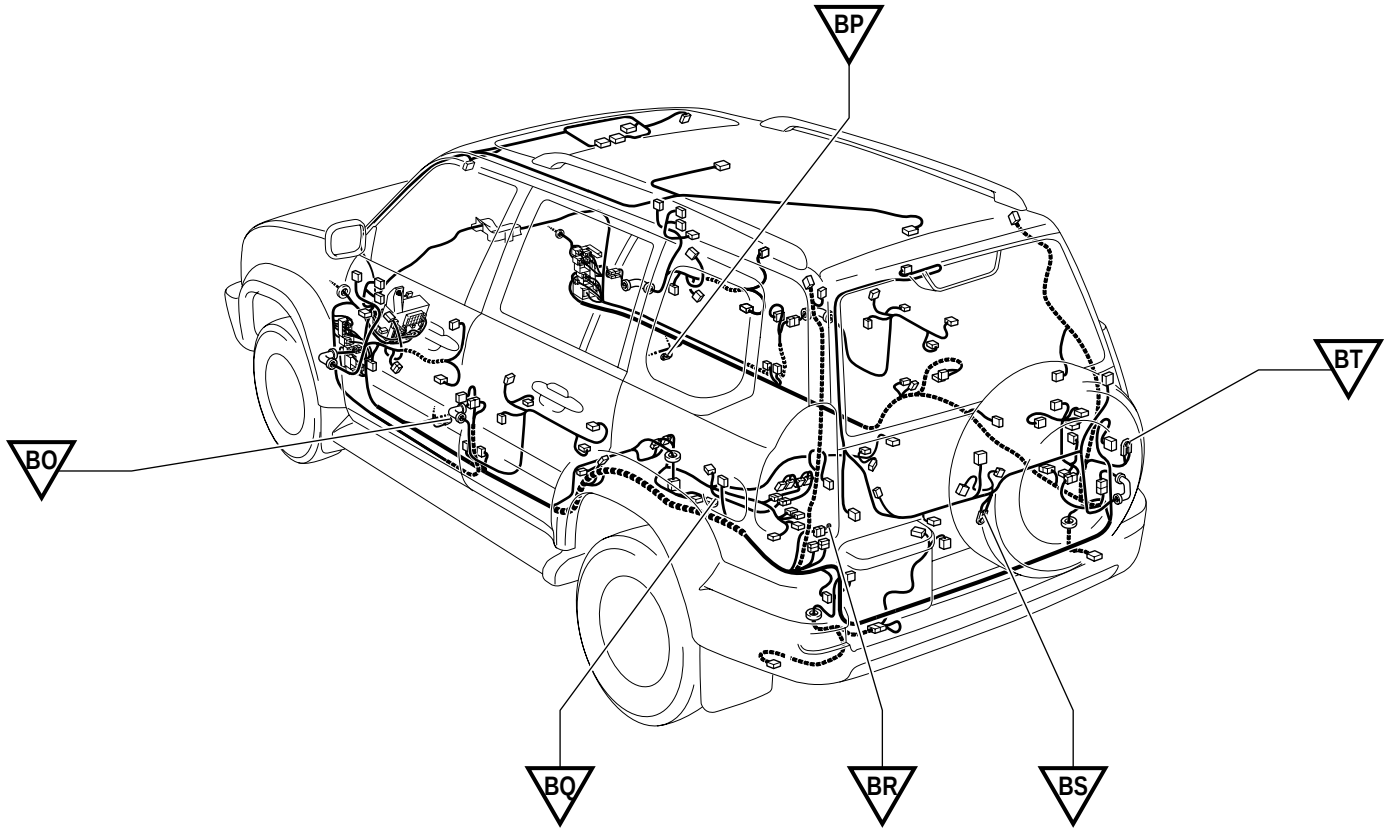

Connector Joining Wire Harness and Wire Harness

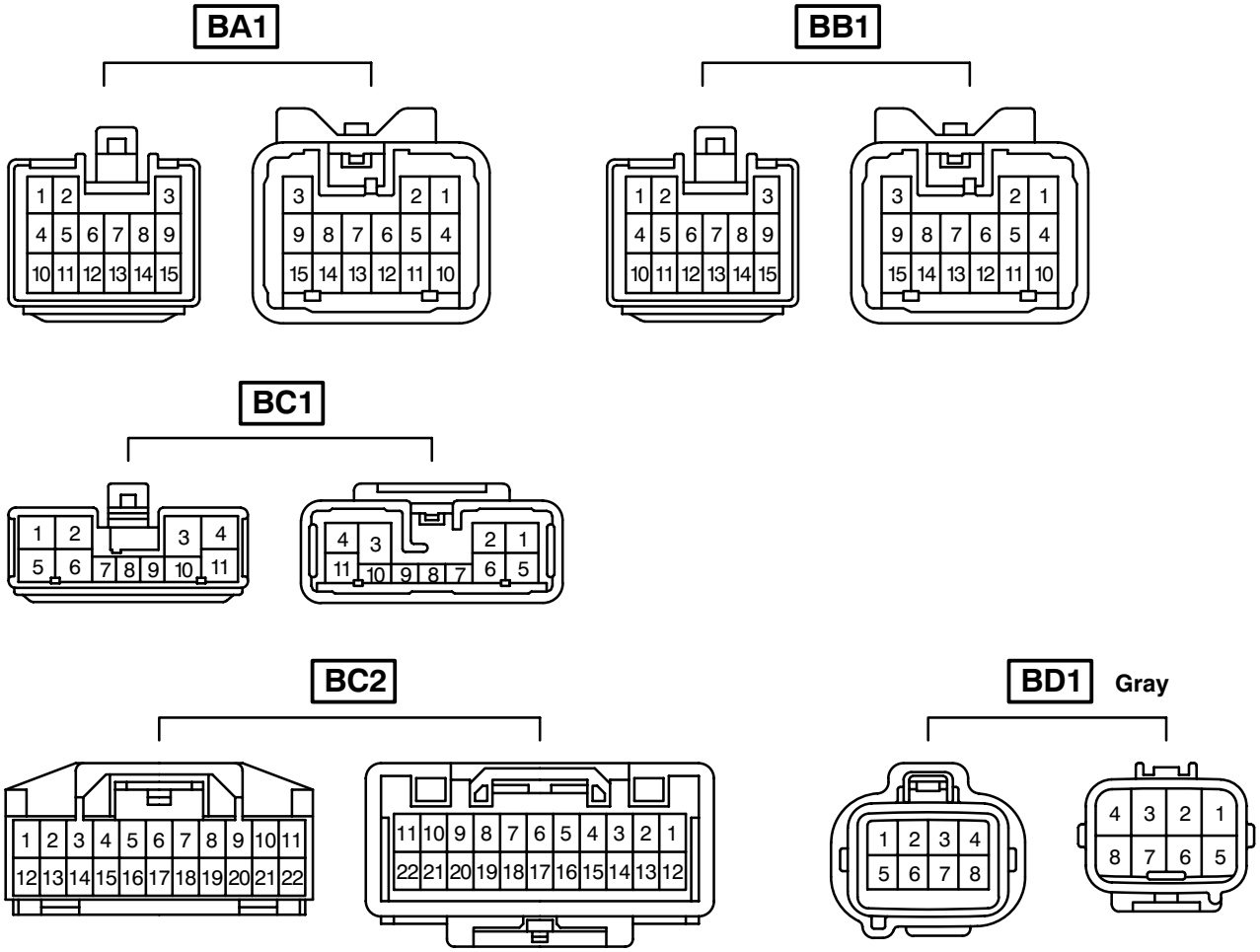

Code	Joining Wire Harness and Wire Harness (Connector Location)
BA1	Rear Door LH Wire and Instrument Panel Wire (Center Pillar LH)
BB1	Rear Door RH Wire and Instrument Panel Wire (Center Pillar RH)
BC1	Frame Wire and Floor No.2 Wire (Under the Left Side of Rear Seat Cushion)
BC2	
BD1	Frame Wire and Differential Wire (Left Side of the No.6 Cross Member)

▭ : Location of Connector Joining Wire Harness and Wire Harness

[LHD : 5–Door]

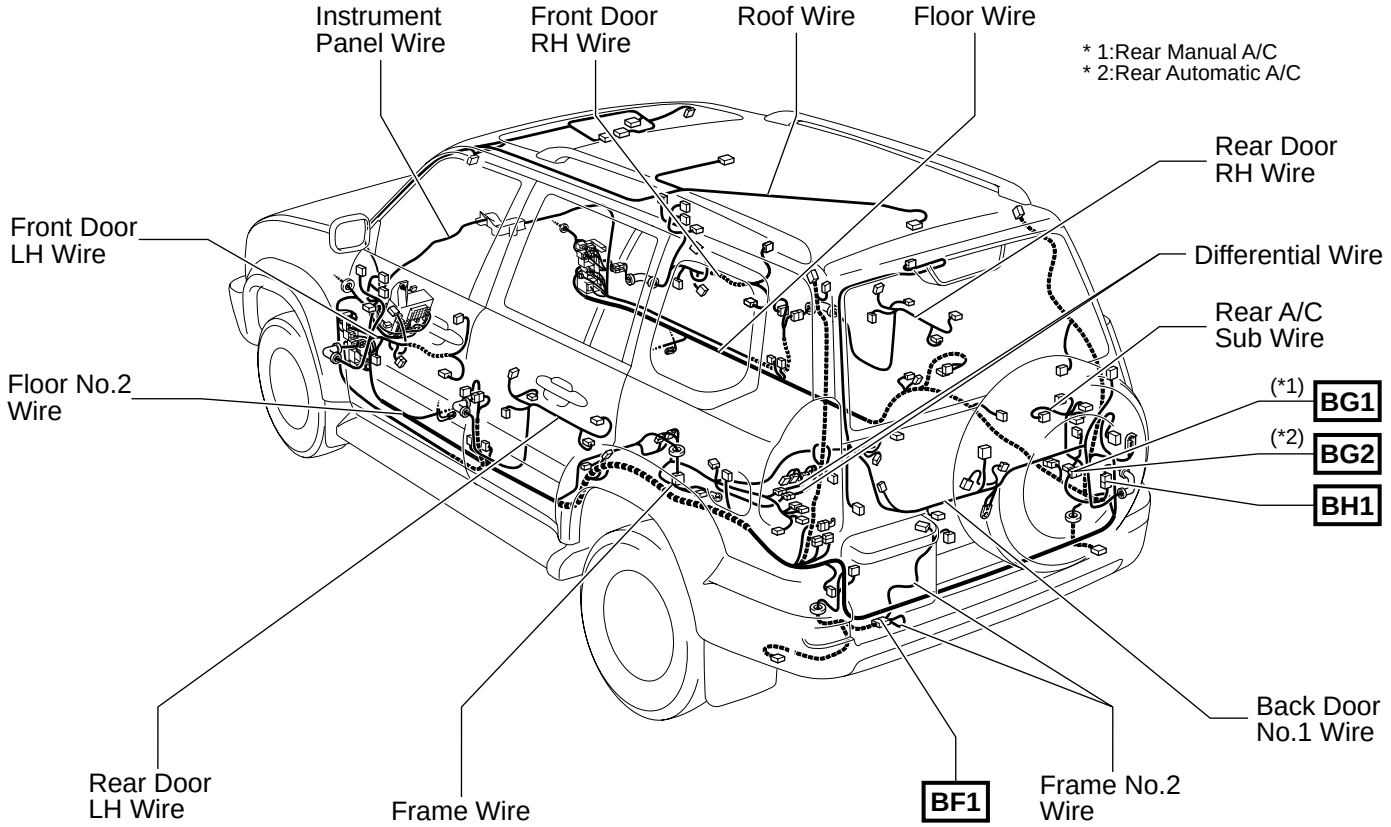

⬡ : Location of Splice Points

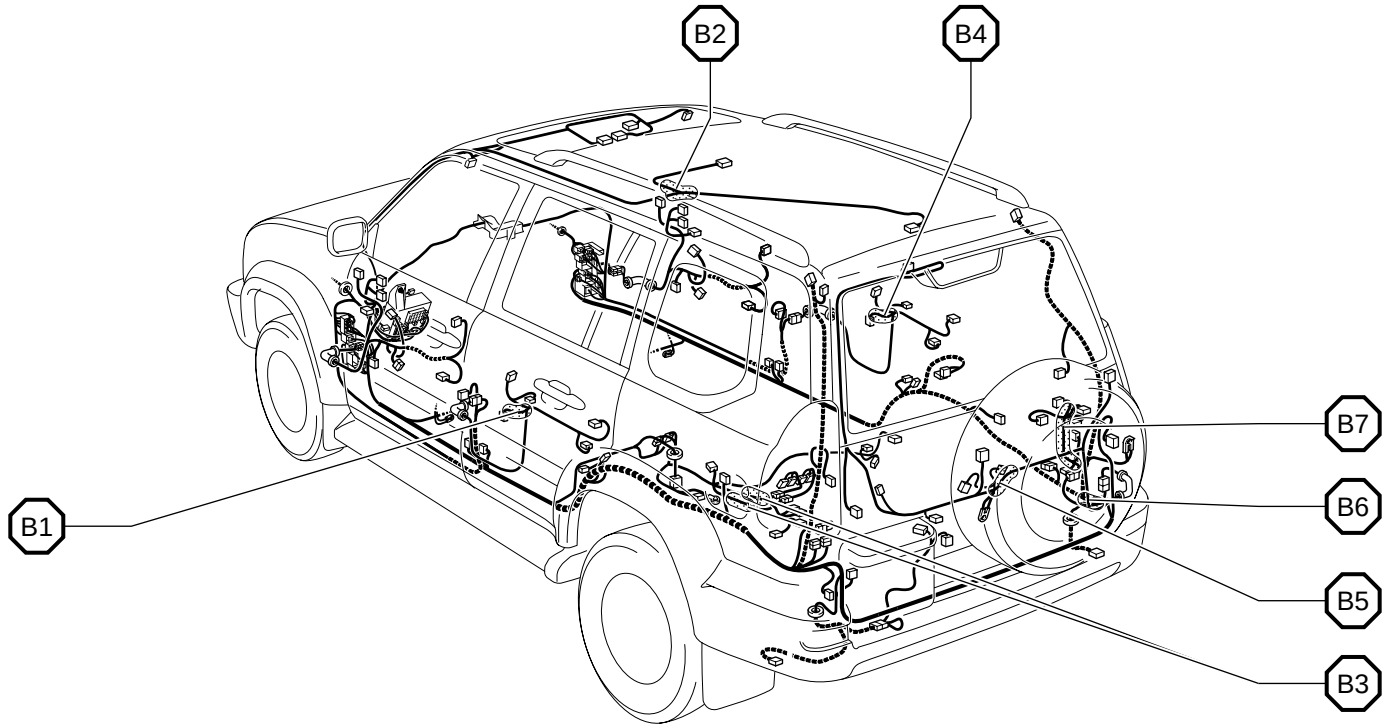

Connector Joining Wire Harness and Wire Harness

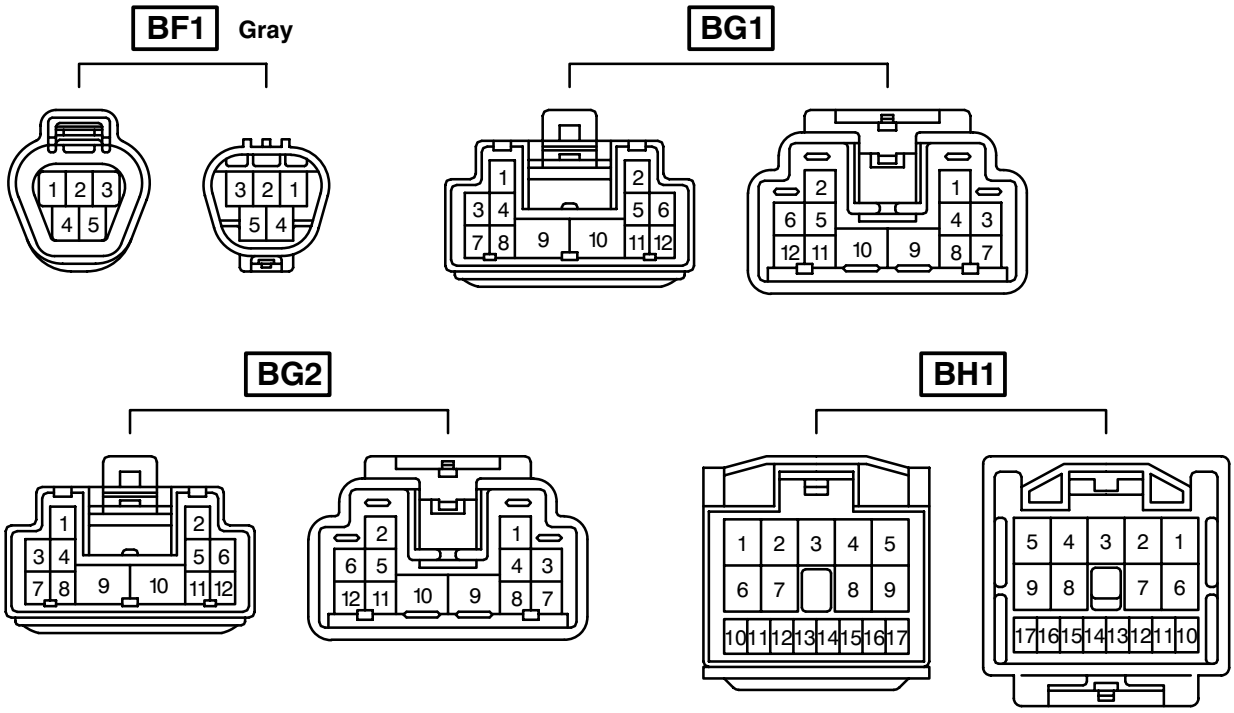

Code	Joining Wire Harness and Wire Harness (Connector Location)
BF1	Floor No.2 Wire and Frame No.2 Wire (Left Side of the Rear Floor)
BG1	Floor Wire and Rear A/C Sub Wire (Right Quarter Panel Inner)
BG2	
BH1	Back Door No.1 Wire and Floor Wire (Right Quarter Panel Inner)

▭ : Location of Connector Joining Wire Harness and Wire Harness

▽ : Location of Ground Points

[LHD : 3–Door]

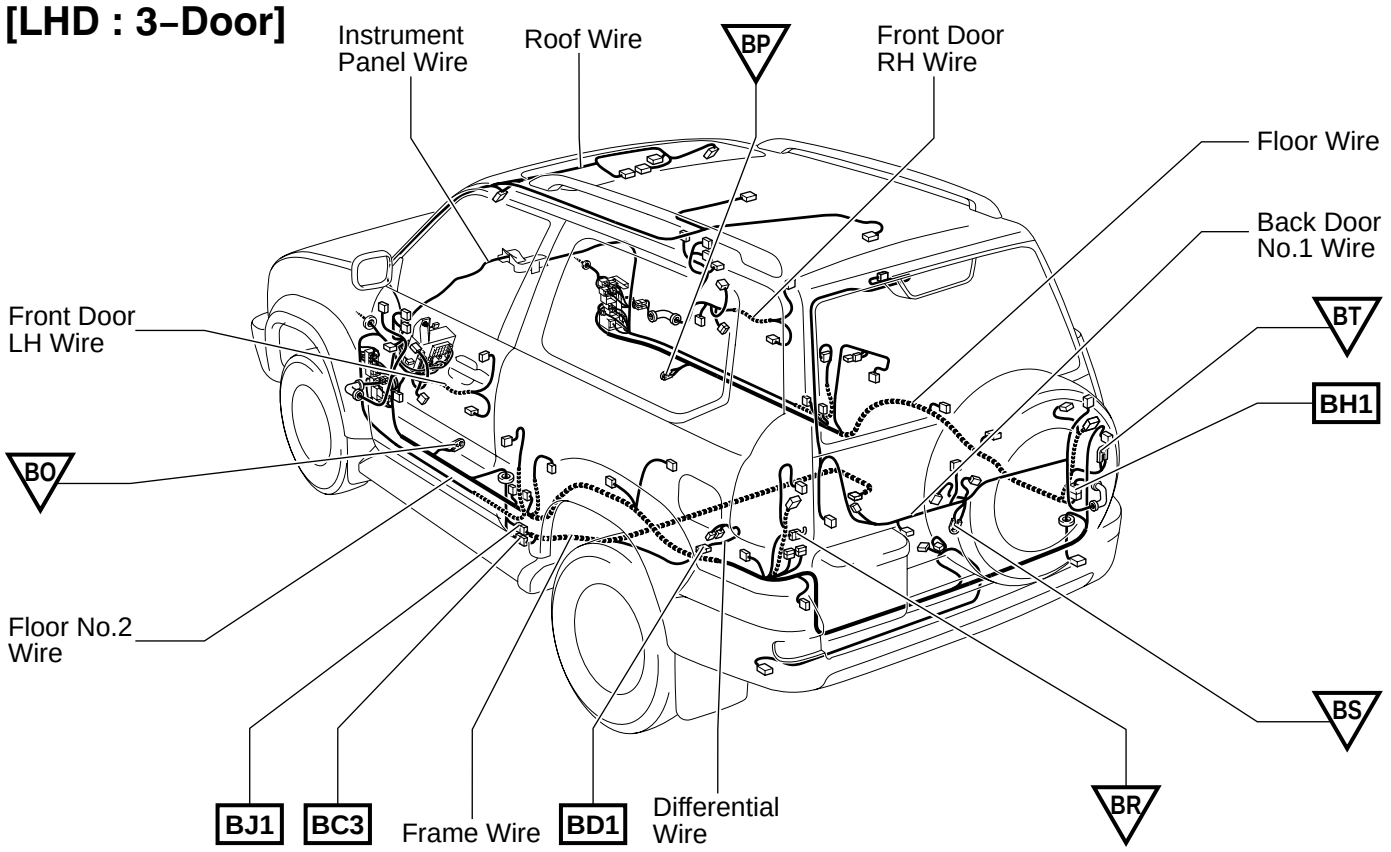

⬡ : Location of Splice Points

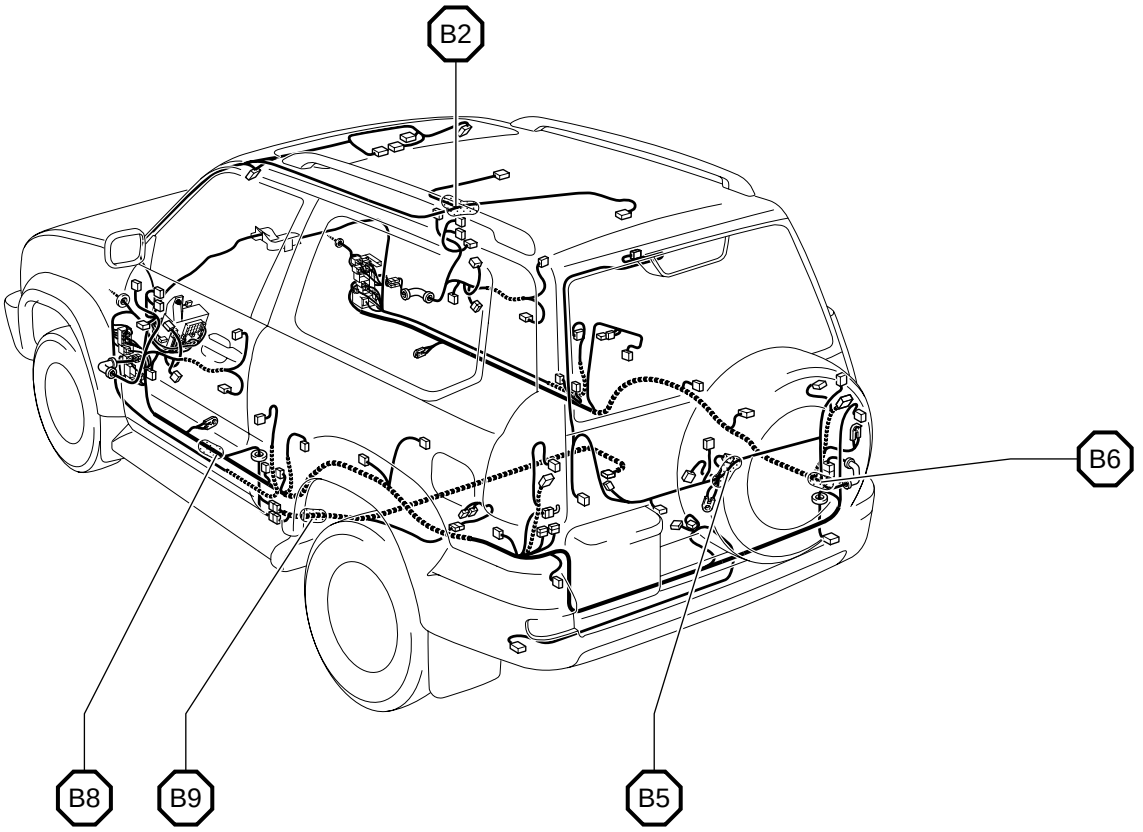

Connector Joining Wire Harness and Wire Harness

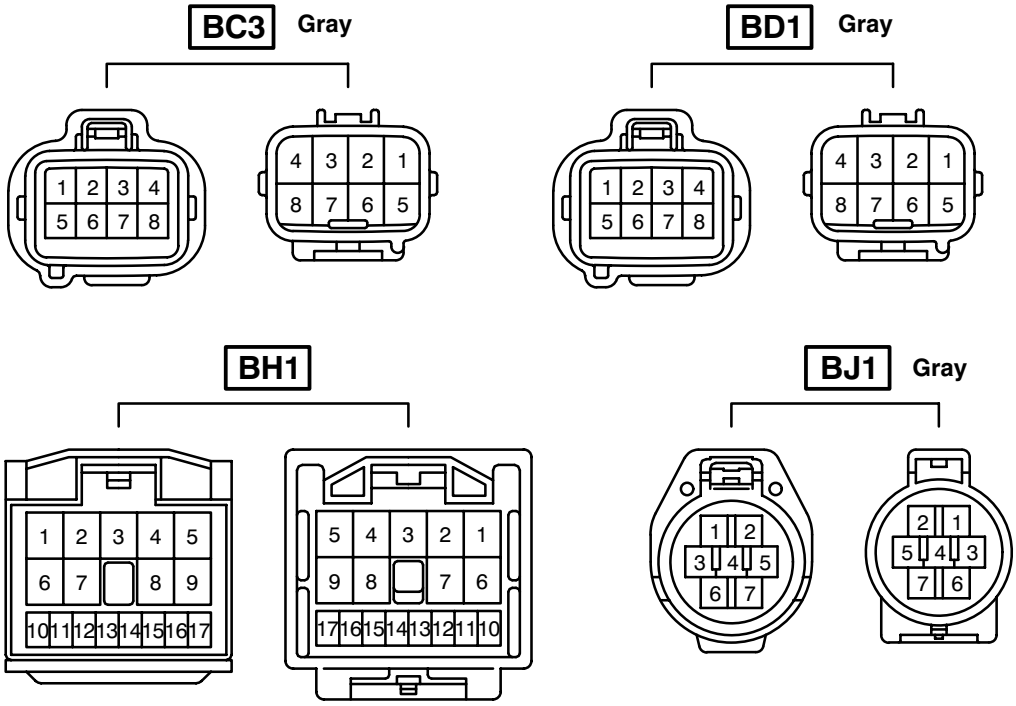

Code	Joining Wire Harness and Wire Harness (Connector Location)
BC3	Frame Wire and Floor No.2 Wire (Frame Side Rail LH)
BD1	Frame Wire and Differential Wire (Left Side of the No.6 Cross Member)
BH1	Back Door No.1 Wire and Floor Wire (Right Quarter Panel Inner)
BJ1	Floor No.2 Wire and Frame Wire (Frame Side Rail LH)

▭ : Location of Connector Joining Wire Harness and Wire Harness

▽ : Location of Ground Points

[RHD : 1GR–FE]

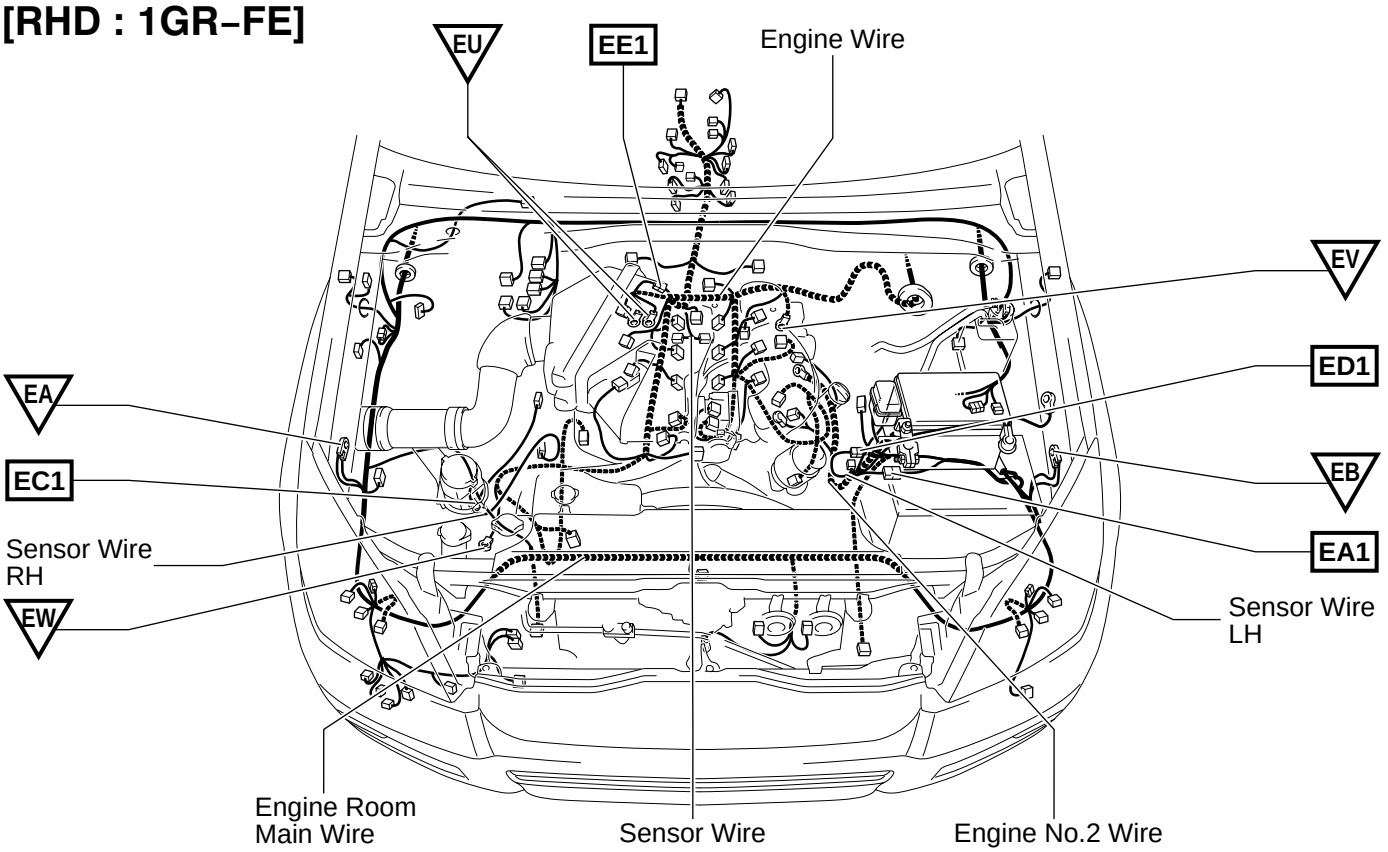

⬡ : Location of Splice Points

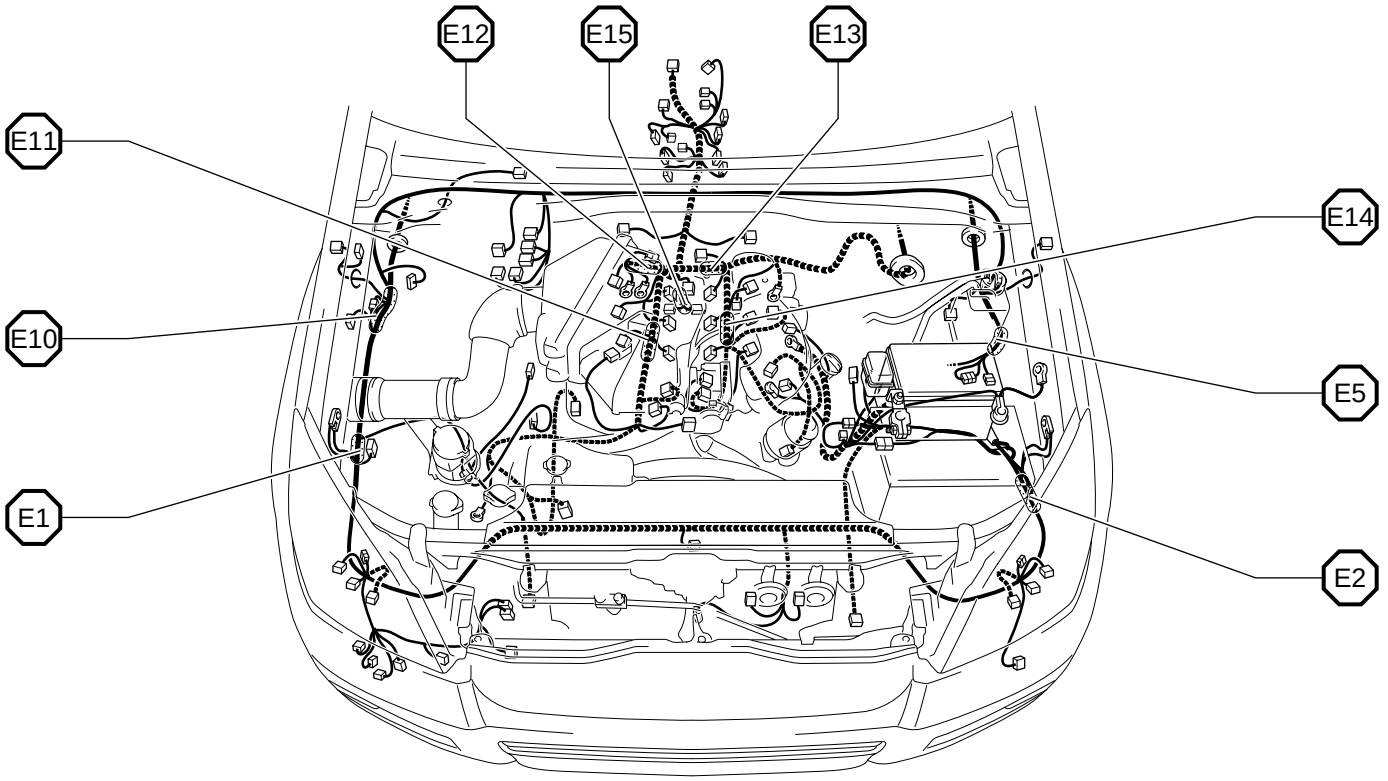

Connector Joining Wire Harness and Wire Harness

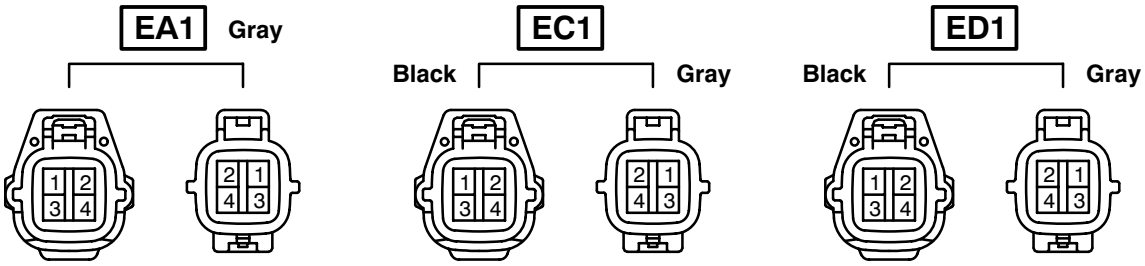

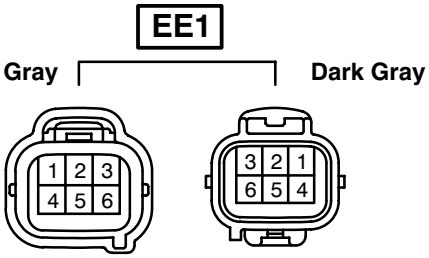

Code	Joining Wire Harness and Wire Harness (Connector Location)
EA1	Engine No.2 Wire and Engine Room Main Wire (Near the Engine Room R/B)
EC1	Sensor Wire RH and Engine Room Main Wire (Near the Air Cleaner)
ED1	Sensor Wire LH and Engine Room Main Wire (Naer the Engine Room R/B)
EE1	Engine Wire and Sensor Wire (Behind the Cylinder Head RH)

▭ : Location of Connector Joining Wire Harness and Wire Harness

▽ : Location of Ground Points

[RHD : 3RZ–FE]

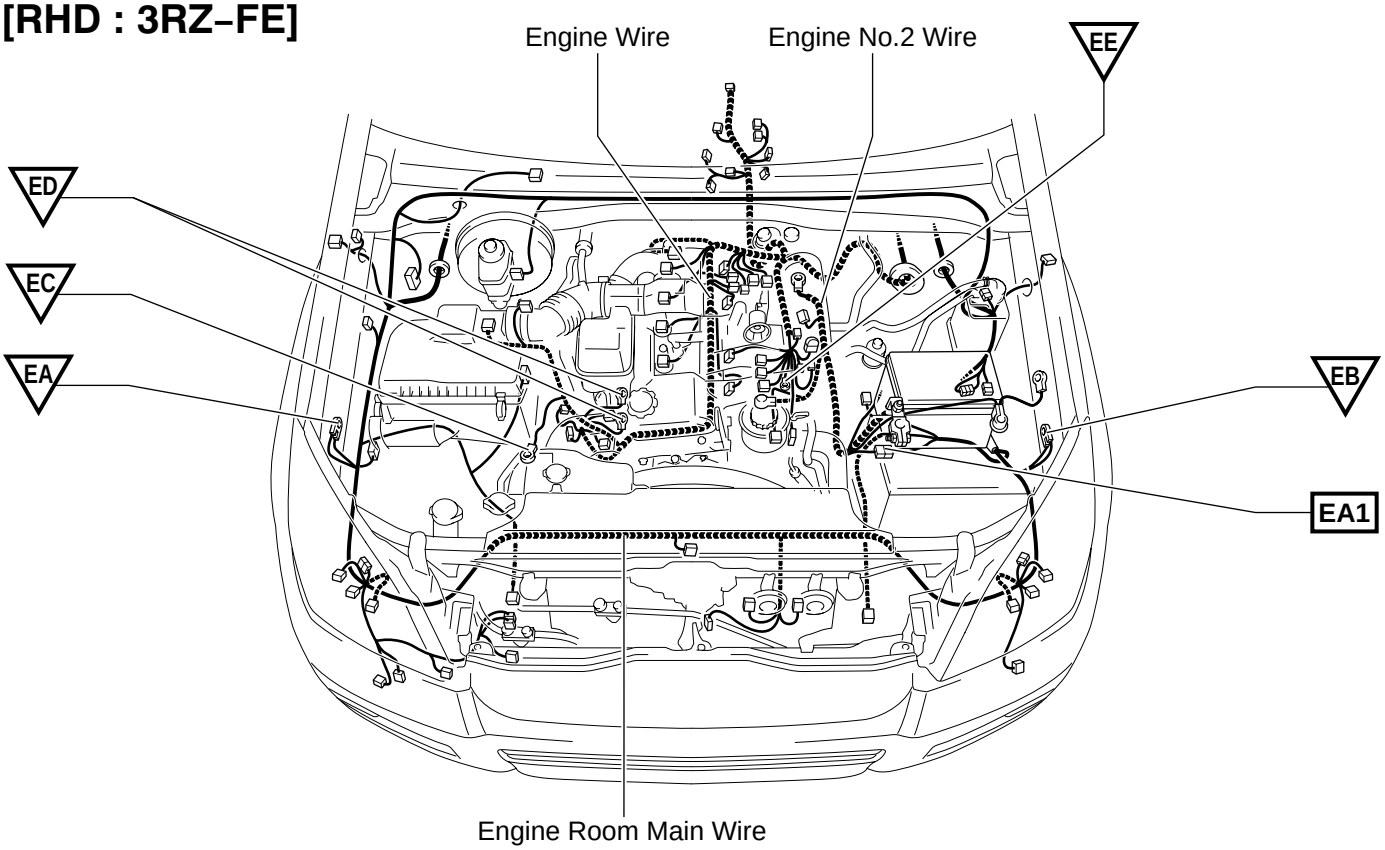

○ : Location of Splice Points

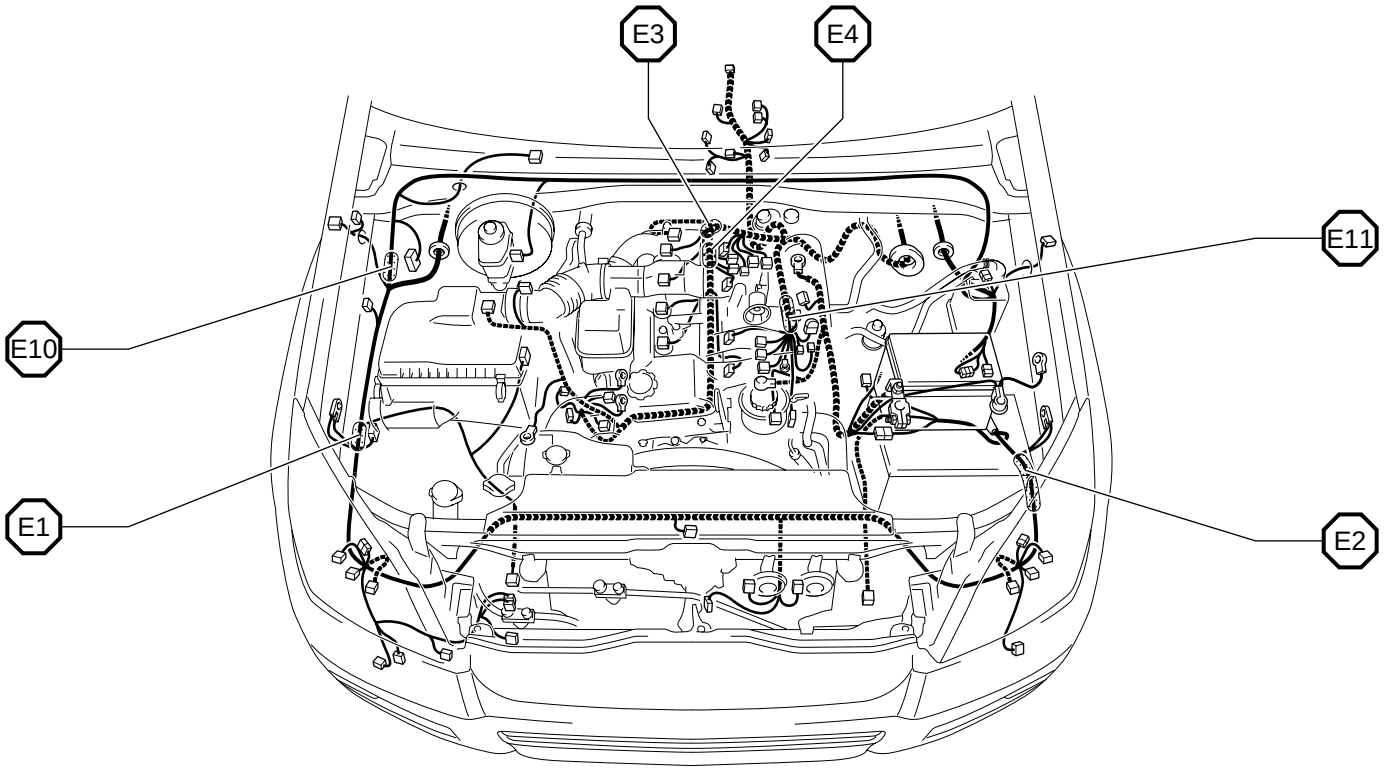

Connector Joining Wire Harness and Wire Harness

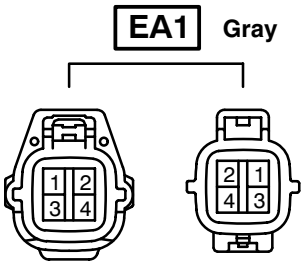

Code	Joining Wire Harness and Wire Harness (Connector Location)
EA1	Engine No.2 Wire and Engine Room Main Wire (Near the Engine Room R/B)

▭ : Location of Connector Joining Wire Harness and Wire Harness

▽ : Location of Ground Points

[RHD : 1KD–FTV]

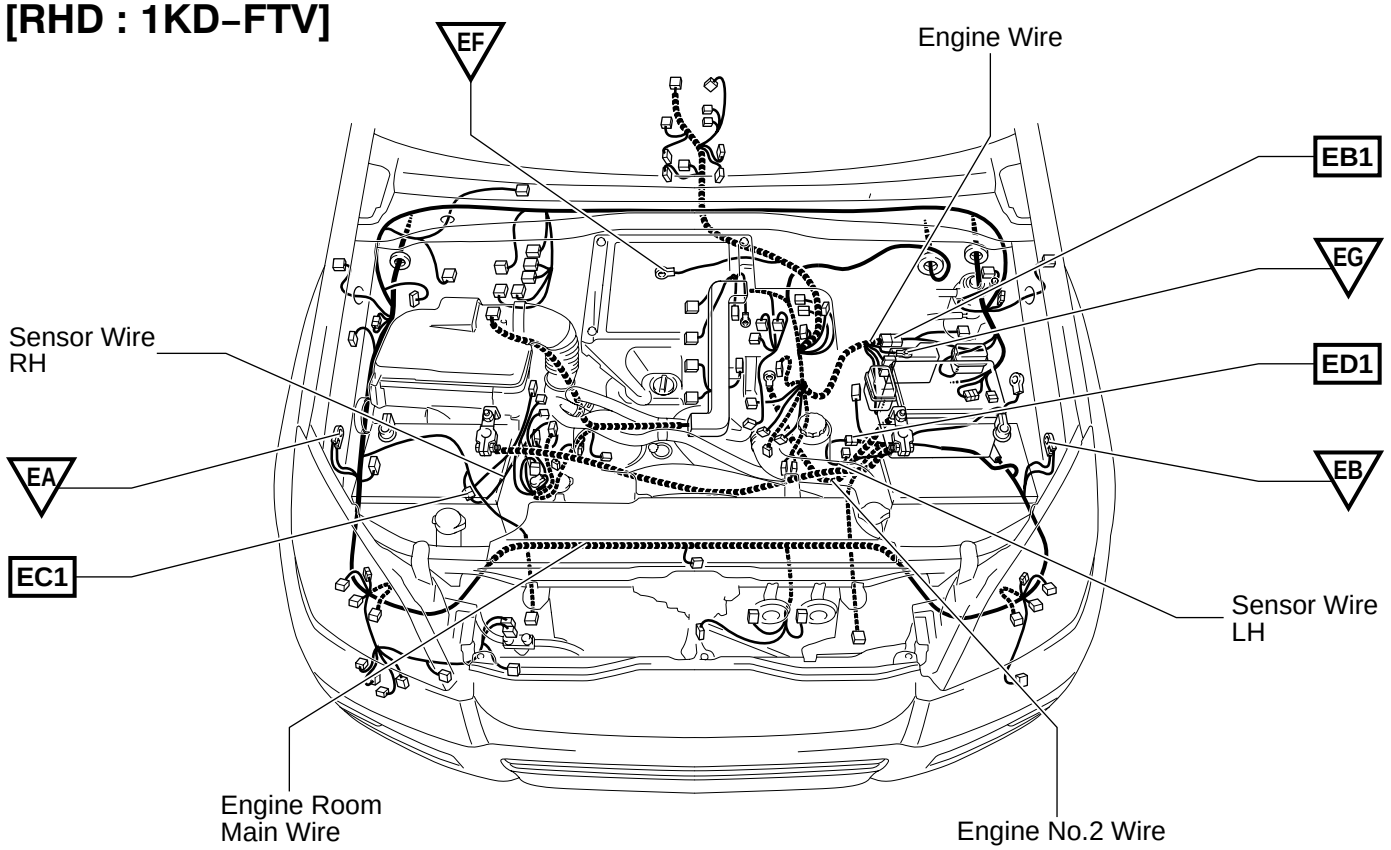

⬡ : Location of Splice Points

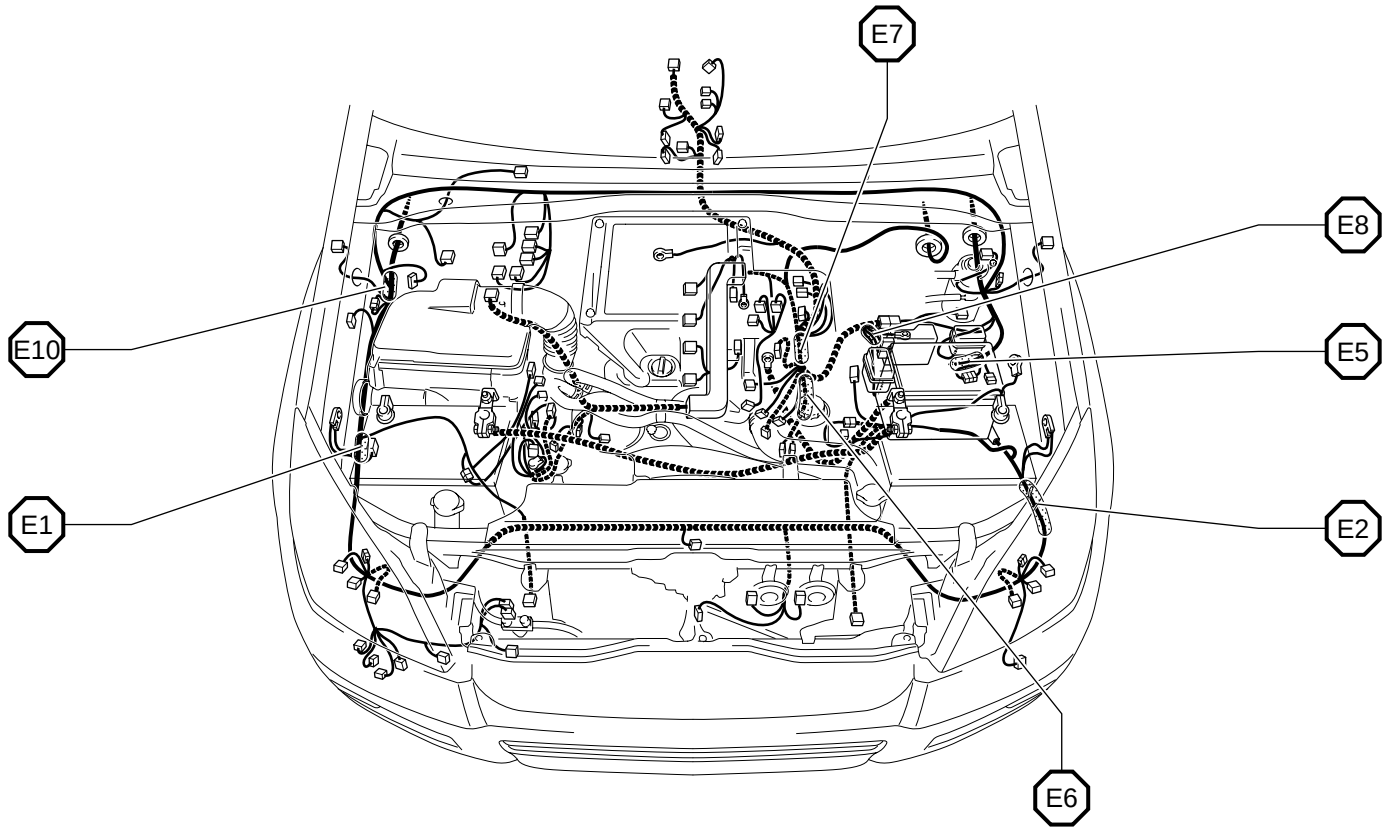

Connector Joining Wire Harness and Wire Harness

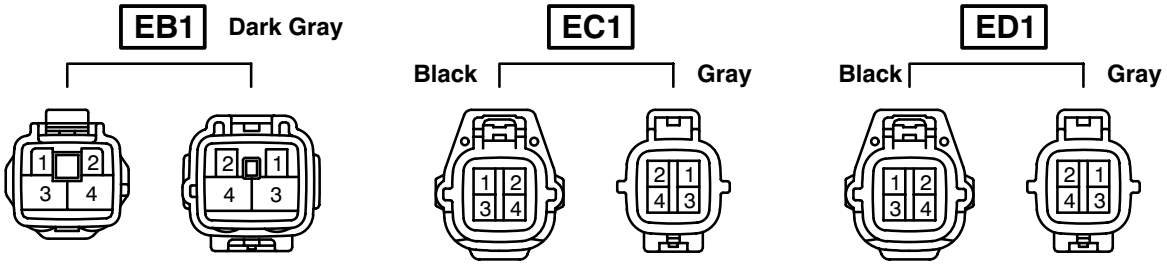

Code	Joining Wire Harness and Wire Harness (Connector Location)
EB1	Engine Room Main Wire and Engine Wire (Rear Side of the Engine Room R/B)
EC1	Sensor Wire RH and Engine Room Main Wire (Near the Air Cleaner)
ED1	Sensor Wire LH and Engine Room Main Wire (Near the Engine Room R/B)

▭ : Location of Connector Joining Wire Harness and Wire Harness

▽ : Location of Ground Points

[RHD : 1KZ–TE]

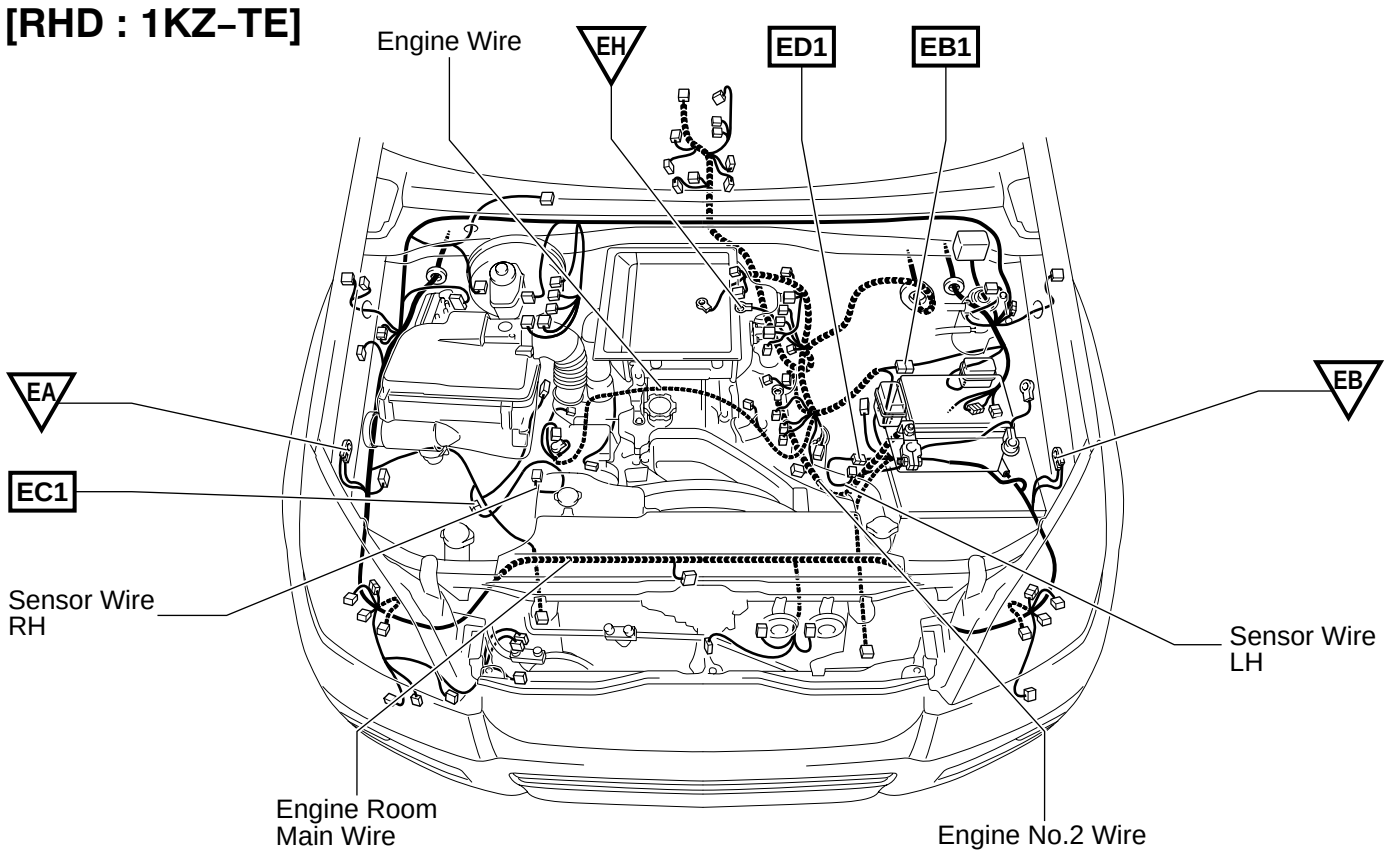

⬡ : Location of Splice Points

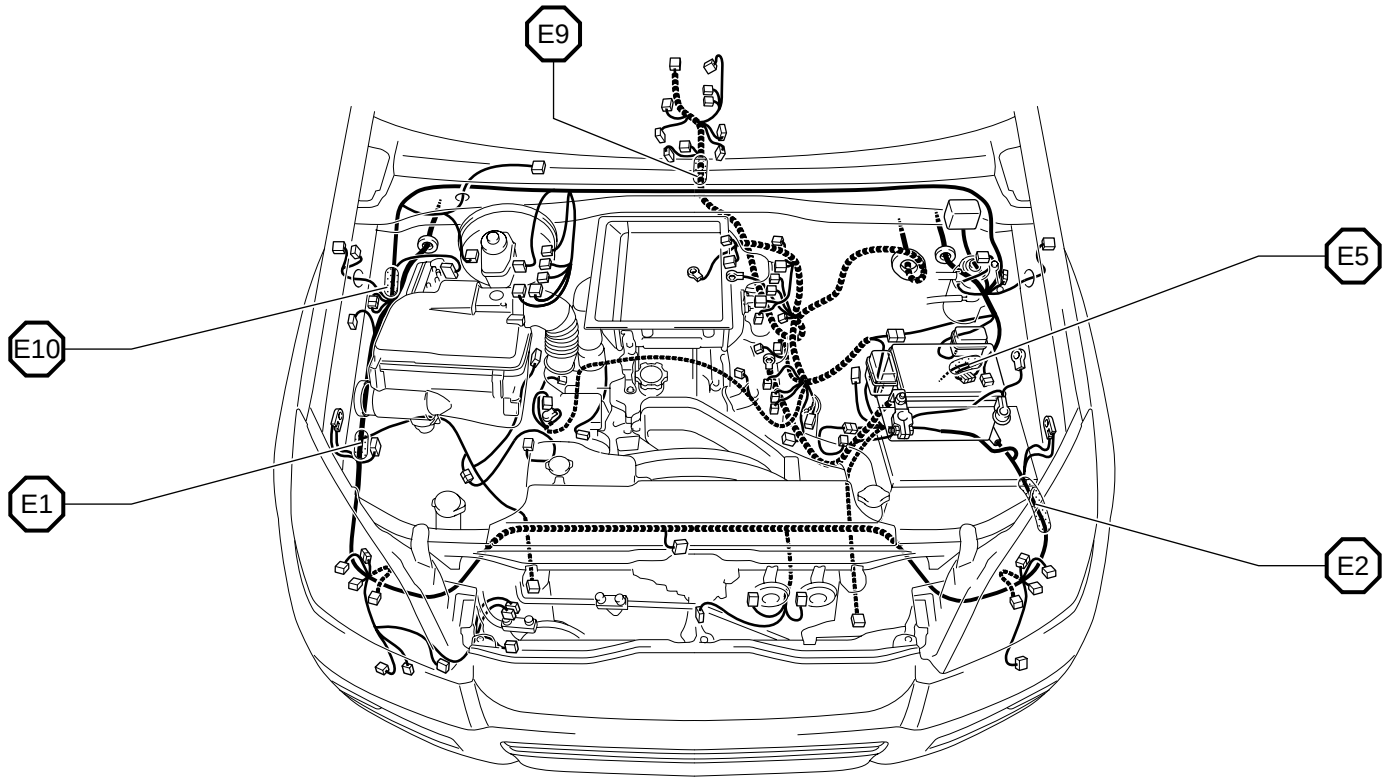

Connector Joining Wire Harness and Wire Harness

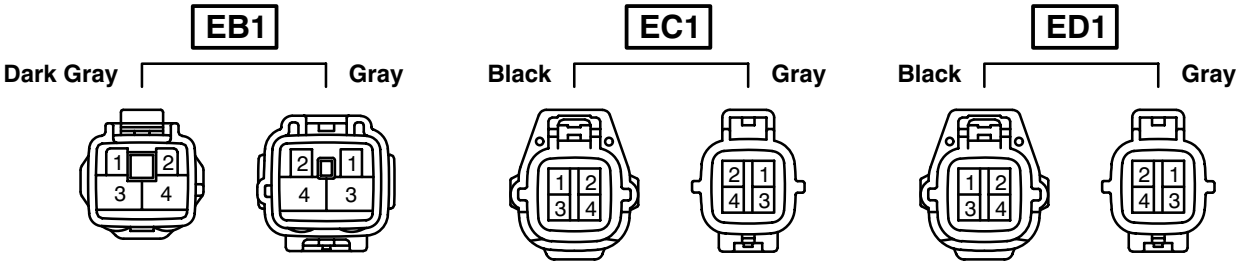

Code	Joining Wire Harness and Wire Harness (Connector Location)
EB1	Engine Room Main Wire and Engine Wire (Rear Side of the Engine Room R/B)
EC1	Sensor Wire RH and Engine Room Main Wire (Near the Air Cleaner)
ED1	Sensor Wire LH and Engine Room Main Wire (Near the Engine Room R/B)

▭ : Location of Connector Joining Wire Harness and Wire Harness

▽ : Location of Ground Points

[RHD : 5L–E]

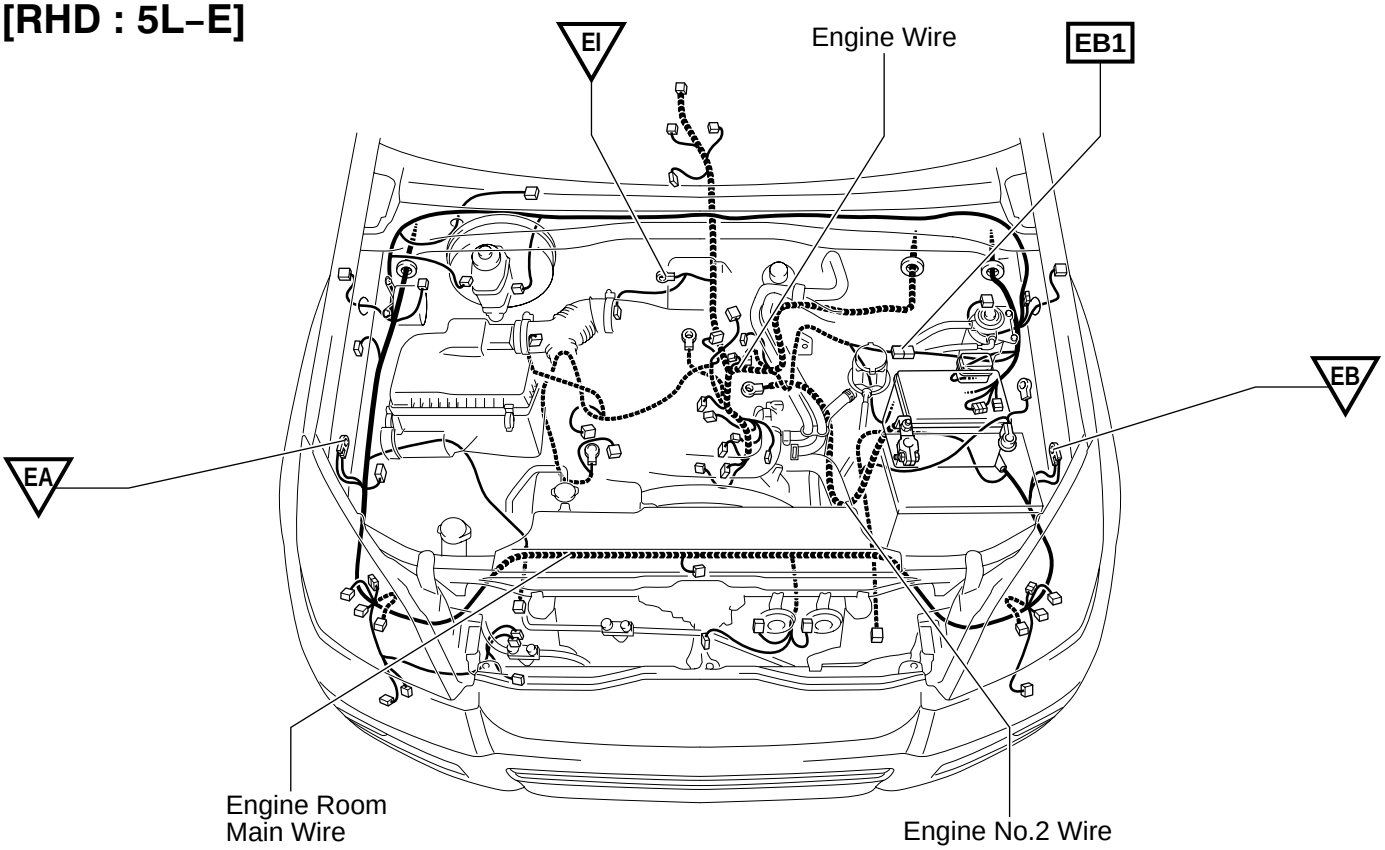

⬡ : Location of Splice Points

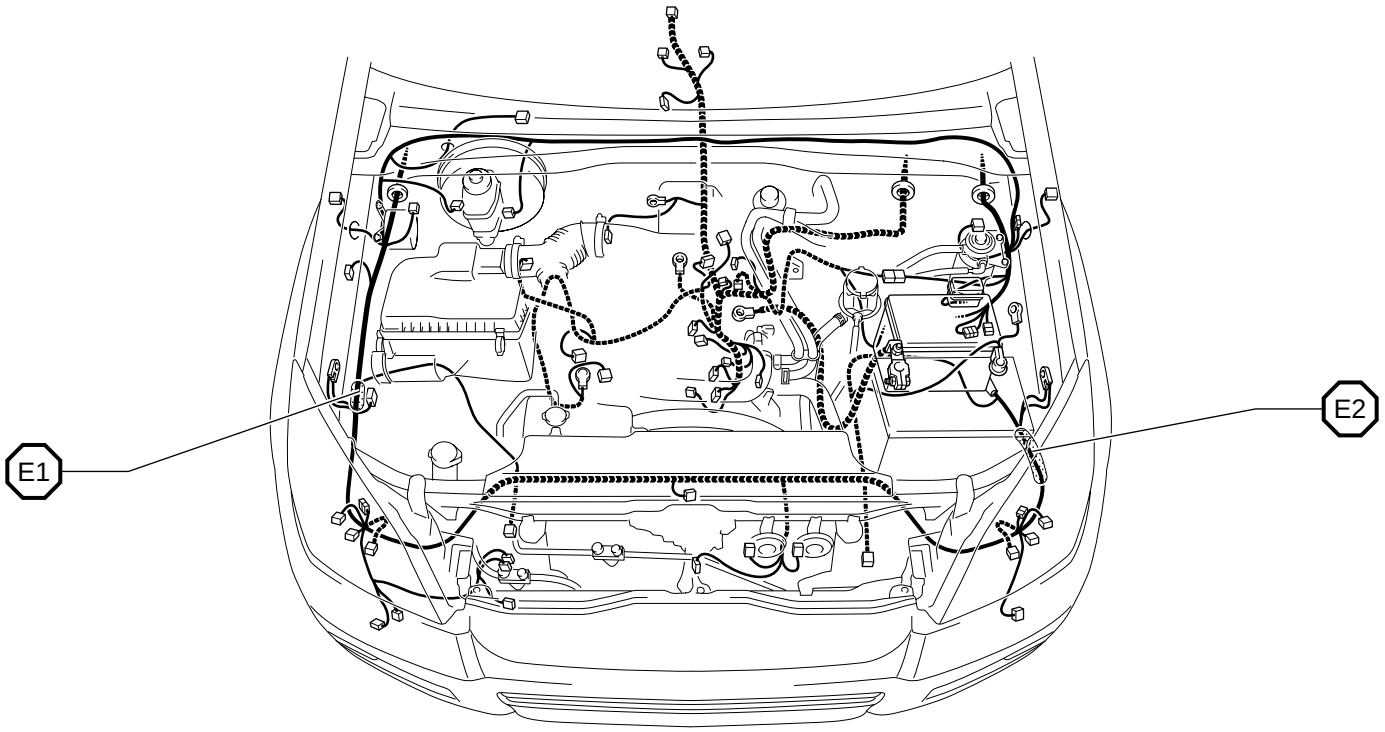

Connector Joining Wire Harness and Wire Harness

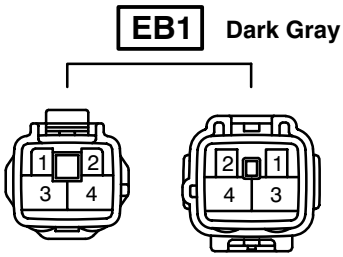

Code	Joining Wire Harness and Wire Harness (Connector Location)
EB1	Engine Room Main Wire and Engine Wire (Rear Side of the Engine Room R/B)

▭ : Location of Connector Joining Wire Harness and Wire Harness

[RHD]

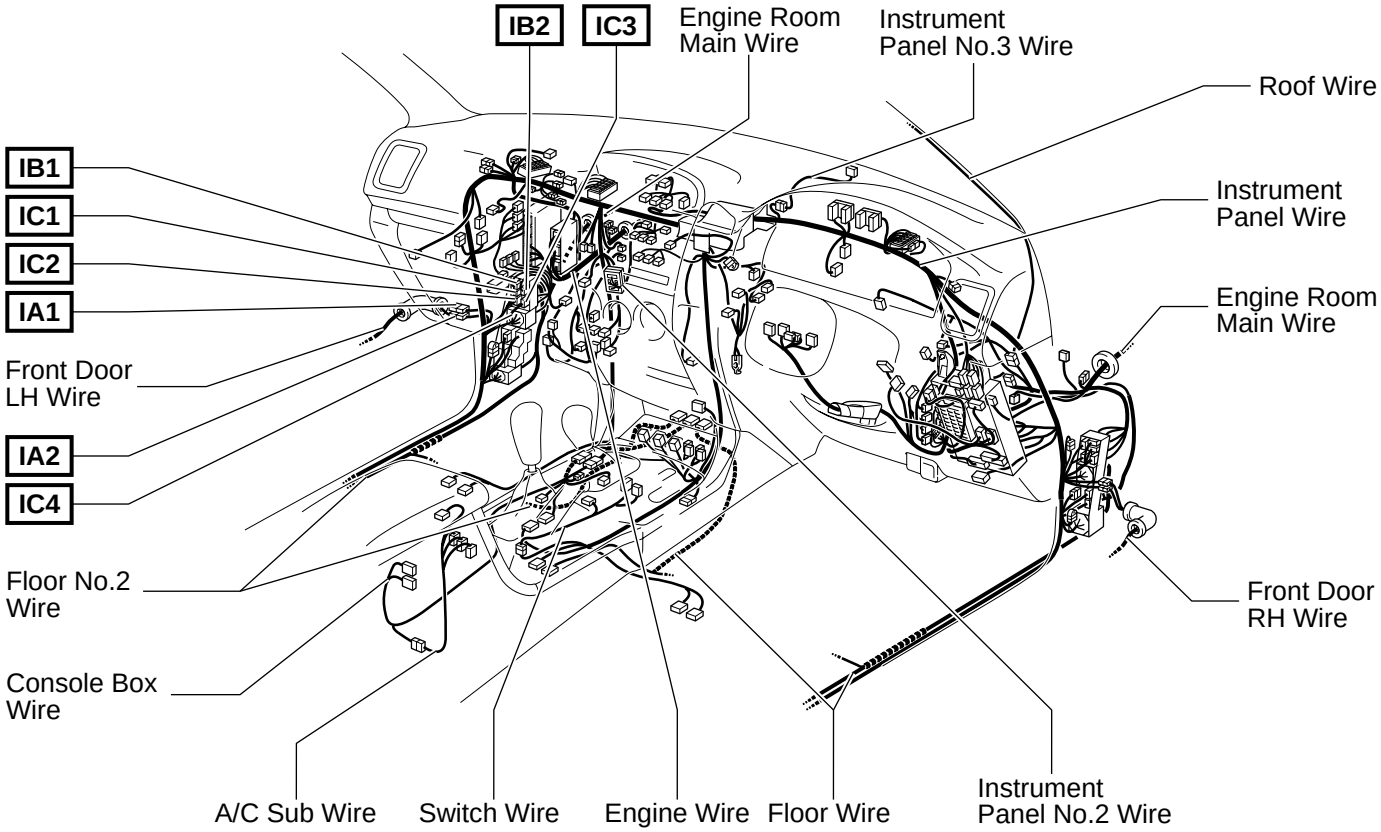

▽ : Location of Ground Points

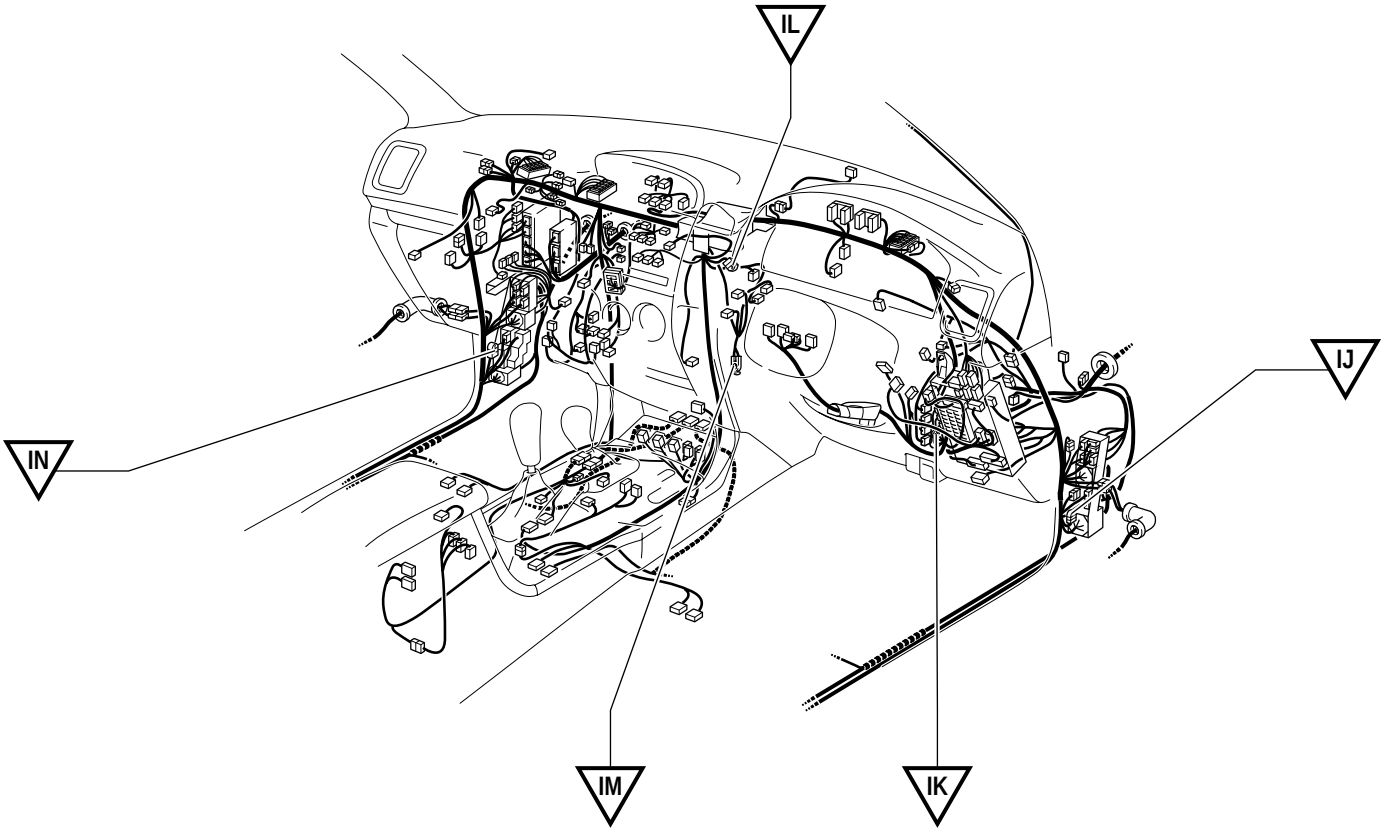

Connector Joining Wire Harness and Wire Harness

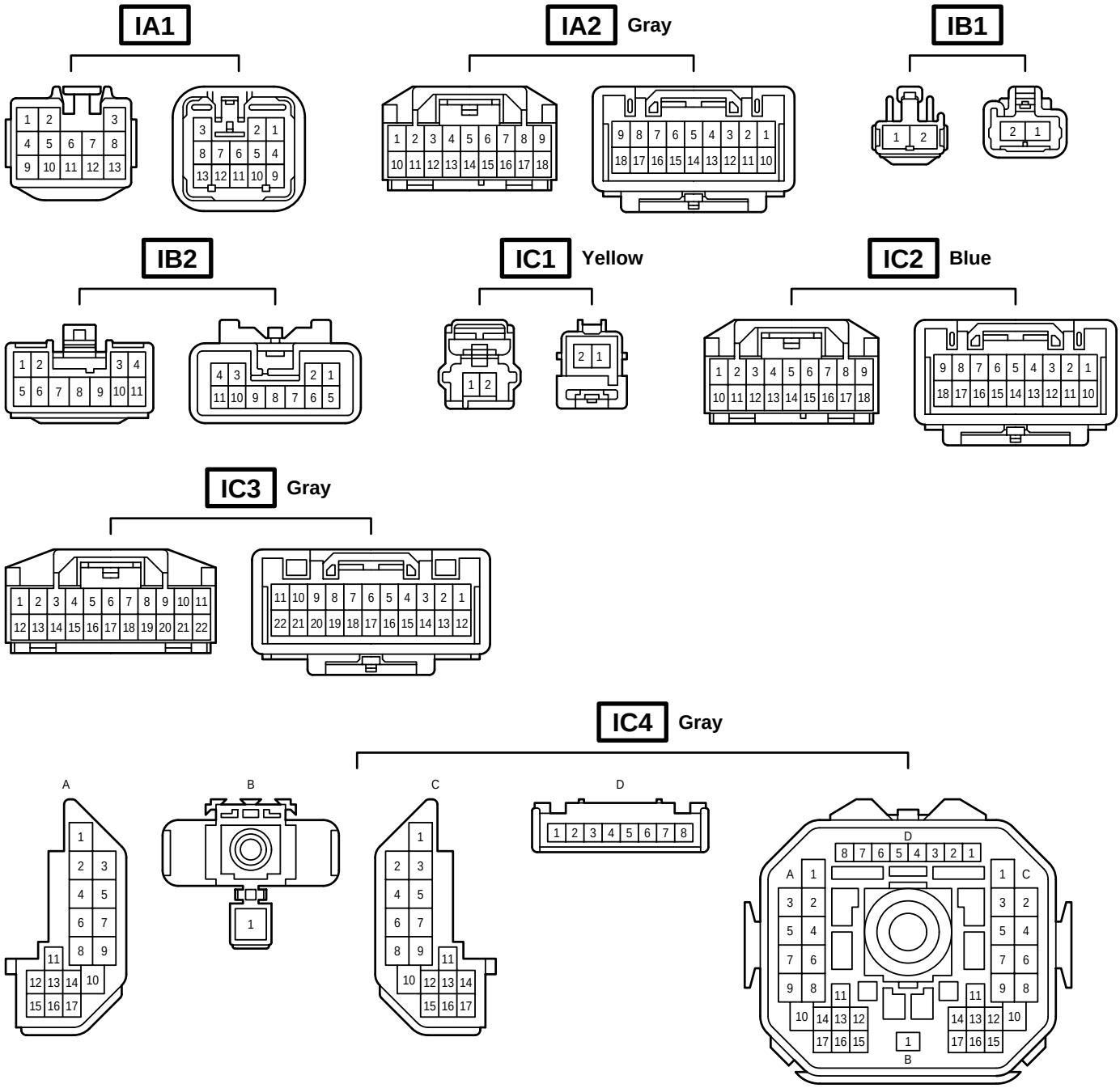

Code	Joining Wire Harness and Wire Harness (Connector Location)
IA1	Front Door LH Wire and Instrument Panel Wire (Left Kick Panel)
IA2	
IB1	Floor No.2 Wire and Engine Room Main Wire (Left Kick Panel)
IB2	
IC1	Instrument Panel Wire and Engine Room Main Wire (Left Kick Panel)
IC2	
IC3	
IC4	

▭ : Location of Connector Joining Wire Harness and Wire Harness

[RHD]

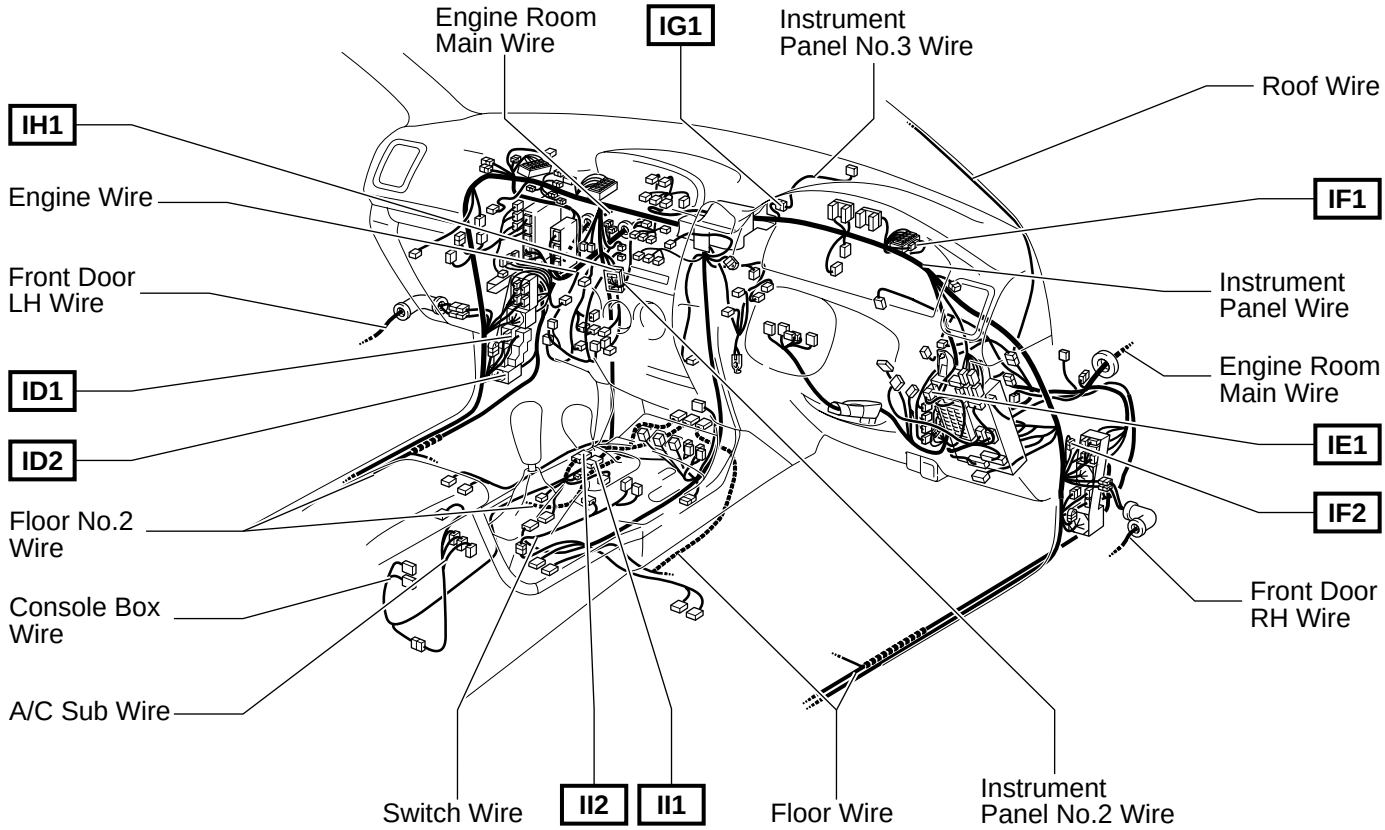

⬡ : Location of Splice Points

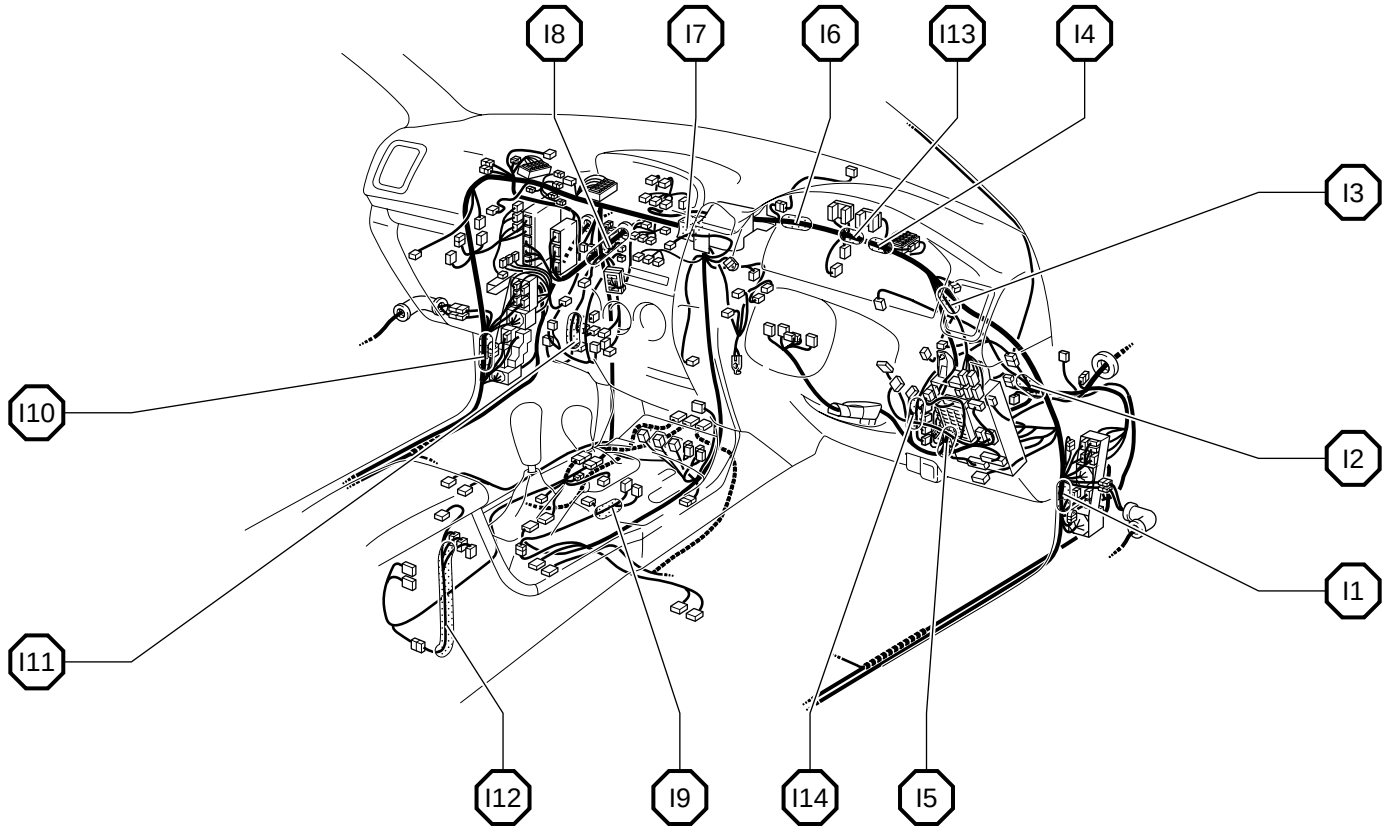

Connector Joining Wire Harness and Wire Harness

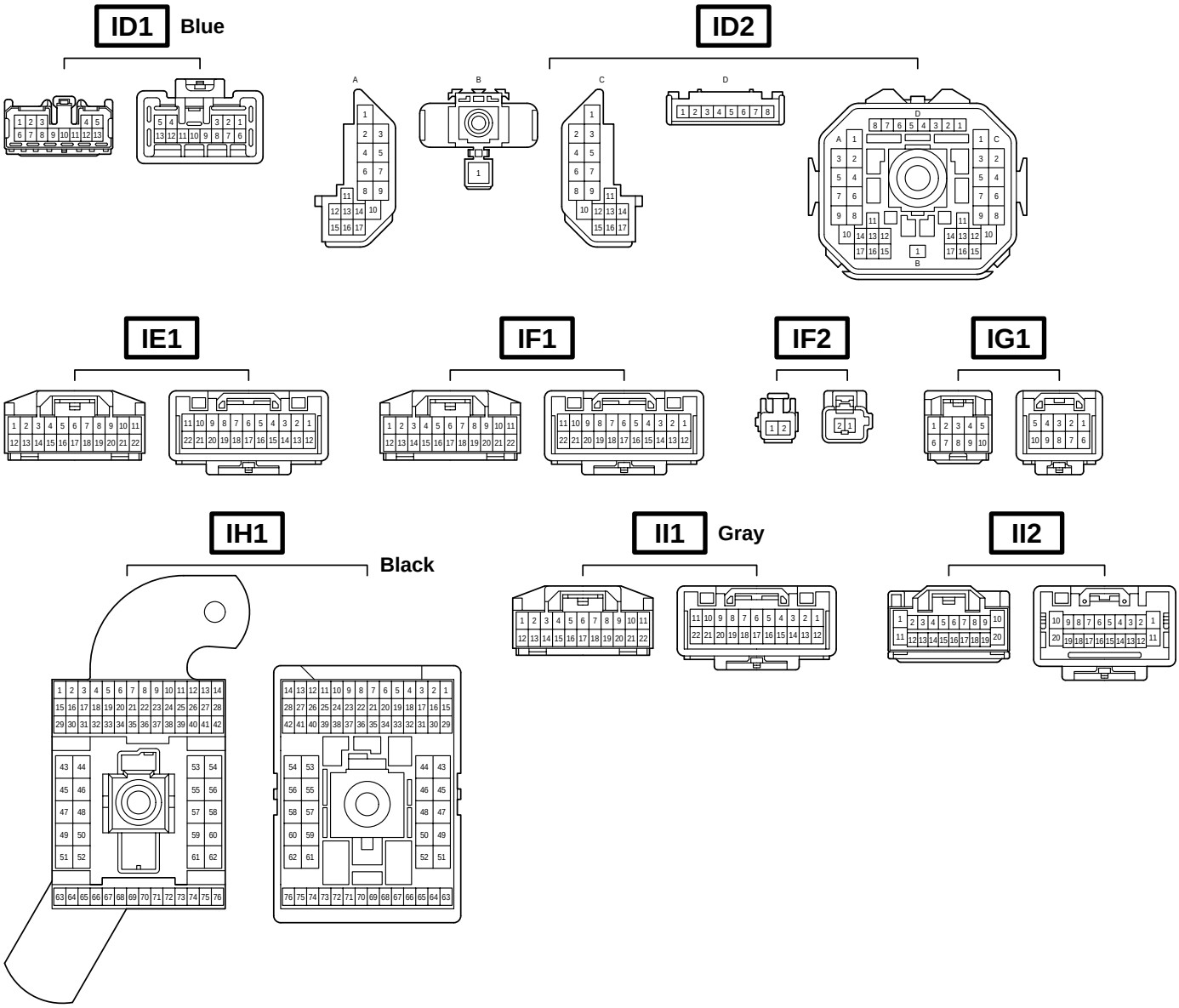

Code	Joining Wire Harness and Wire Harness (Connector Location)
ID1	Instrument Panel Wire and Floor No.2 Wire (Left Kick Panel)
ID2	
IE1	Roof Wire and Instrument Panel Wire (Left Side of the Driver Side J/B)
IF1	Instrument Panel Wire and Instrument Panel Wire (Near the Center J/B No.1)
IF2	Instrument Panel Wire and Instrument Panel Wire (Right Kick Panel)
IG1	Instrument Panel No.3 Wire and Instrument Panel Wire (Near the Combination Meter)
IH1	Instrument Panel Wire and Instrument Panel No.2 Wire (Instrument Panel Brace LH)
II1	Console Box Wire and Instrument Panel Wire (Under the Instrument Panel Brace LH)
II2	

▭ : Location of Connector Joining Wire Harness and Wire Harness

[RHD]

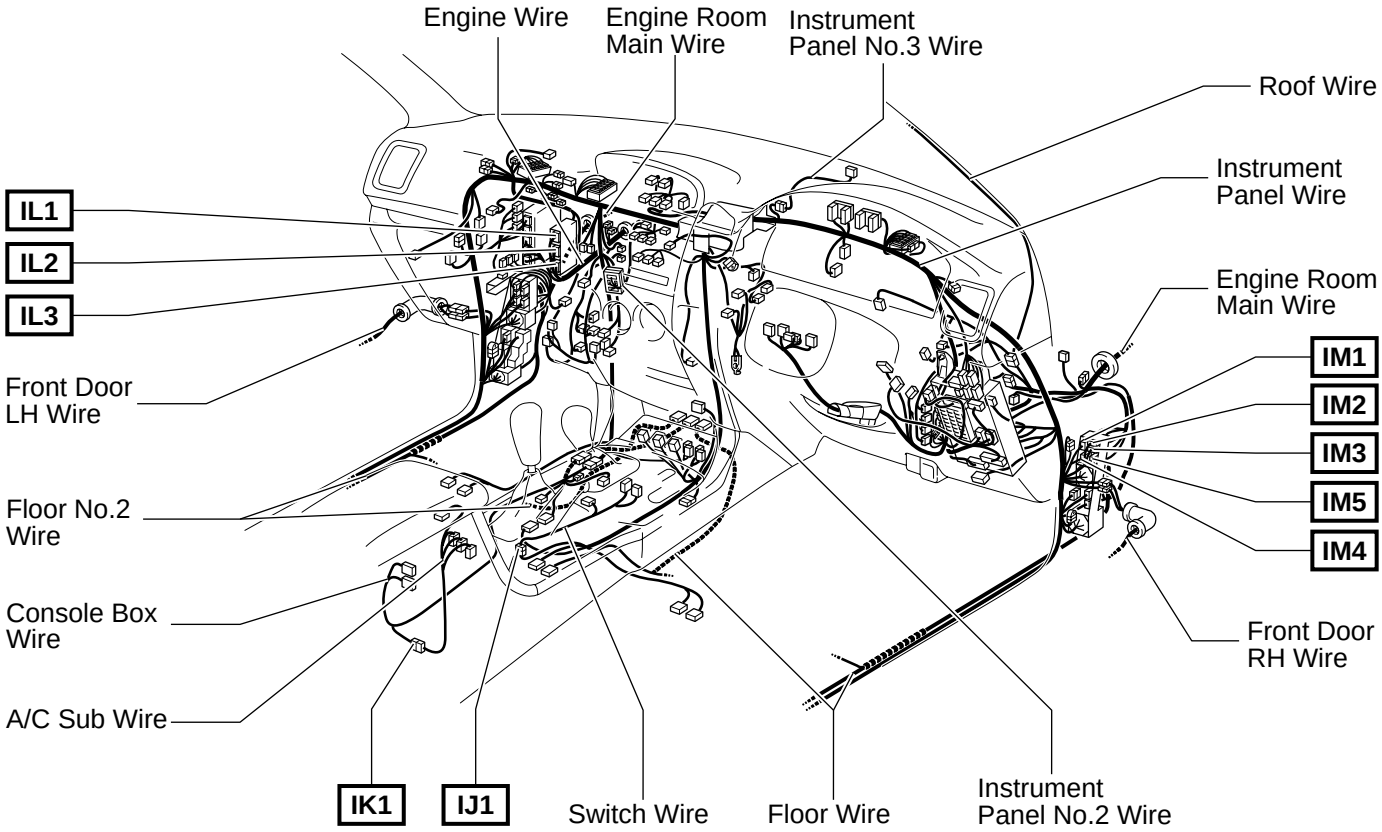

Connector Joining Wire Harness and Wire Harness

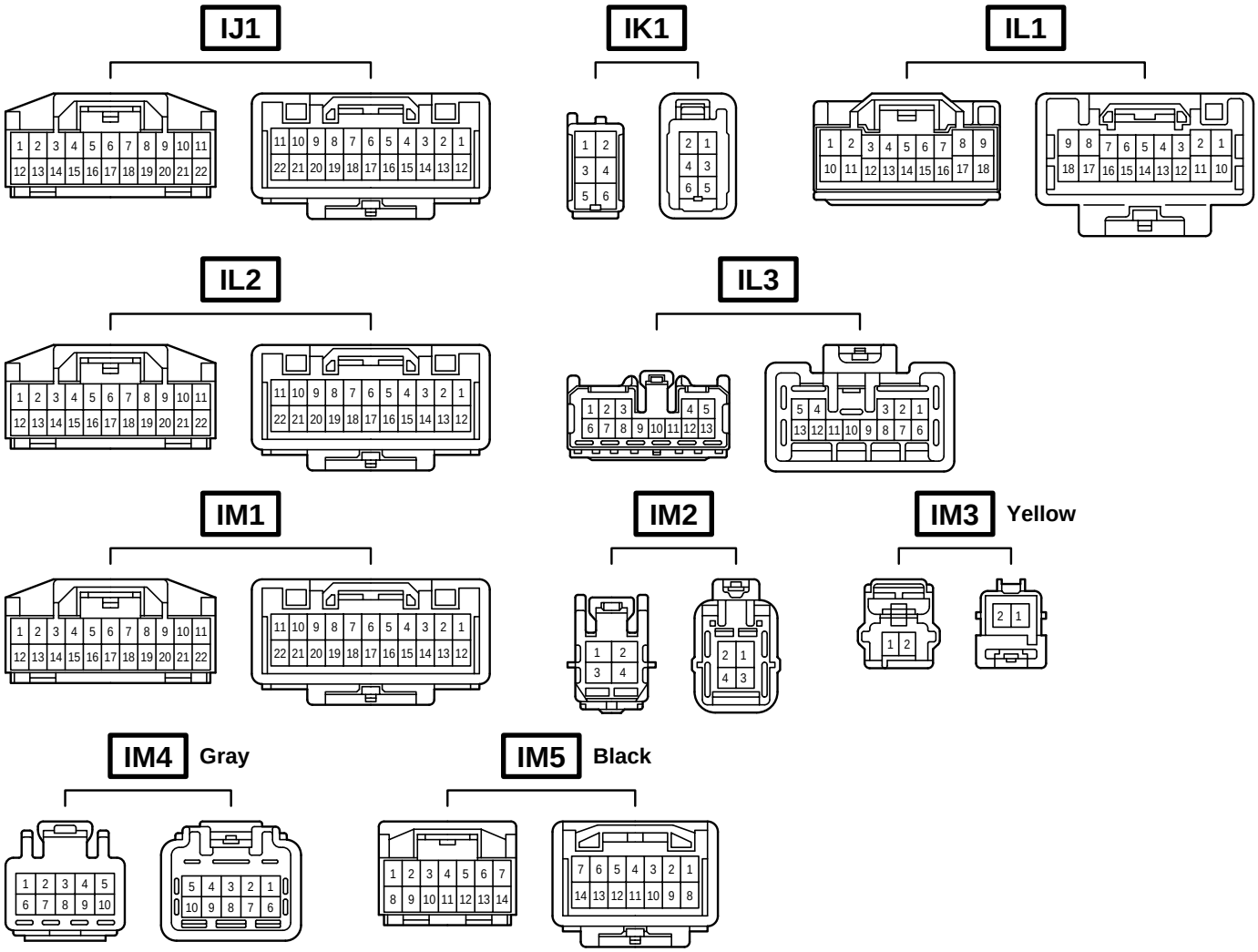

Code	Joining Wire Harness and Wire Harness (Connector Location)
IJ1	Instrument Panel Wire and Switch Wire (Front Side of the Console Box)
IK1	Console Box Wire and A/C Sub Wire (Rear Side of the Console Box)
IL1	Engine Wire and Instrument Panel Wire (Left Side of the Blower Unit)
IL2	
IL3	
IM1	Instrument Panel Wire and Engine Room Main Wire (Right Kick Panel)
IM2	
IM3	
IM4	
IM5	

▭ : Location of Connector Joining Wire Harness and Wire Harness

[RHD]

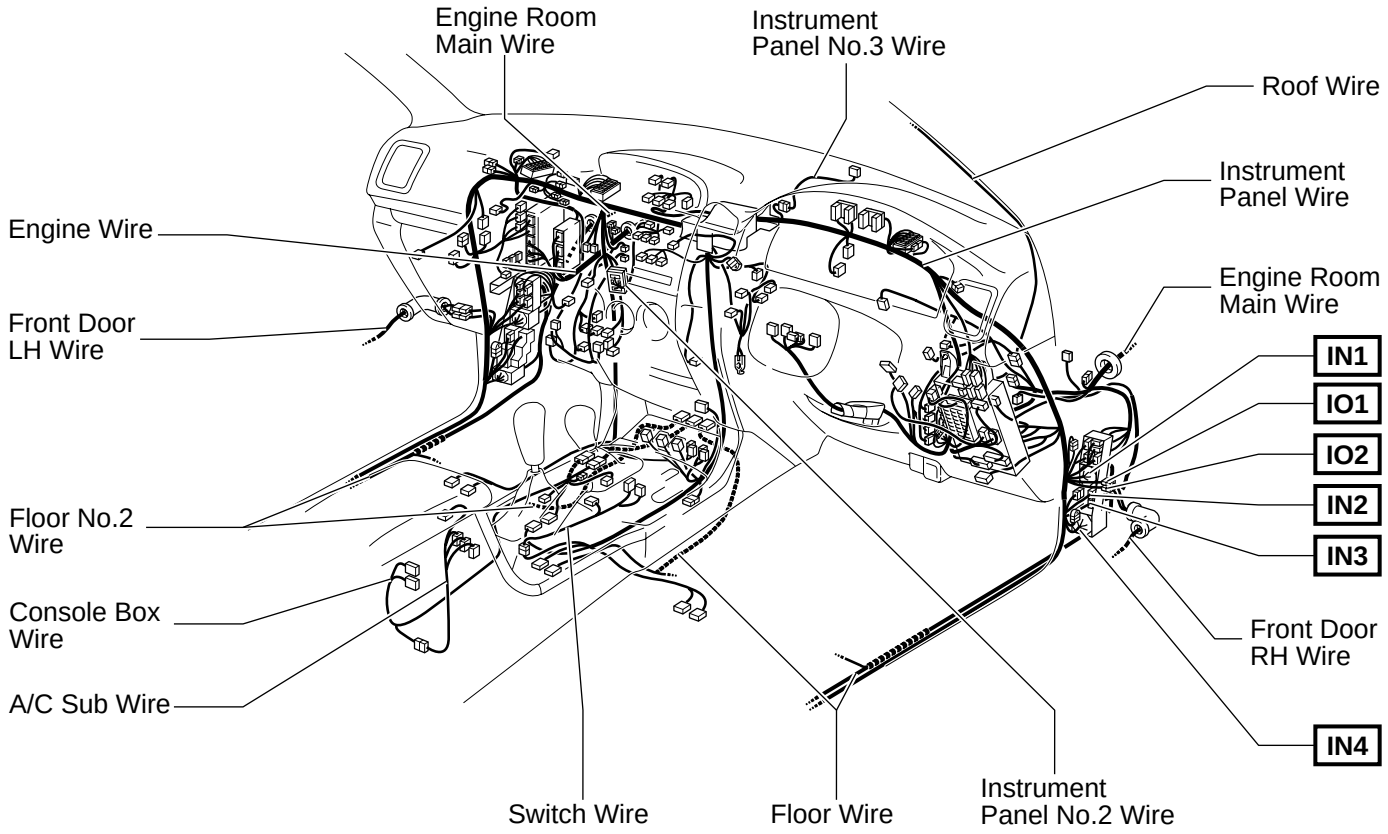

Connector Joining Wire Harness and Wire Harness

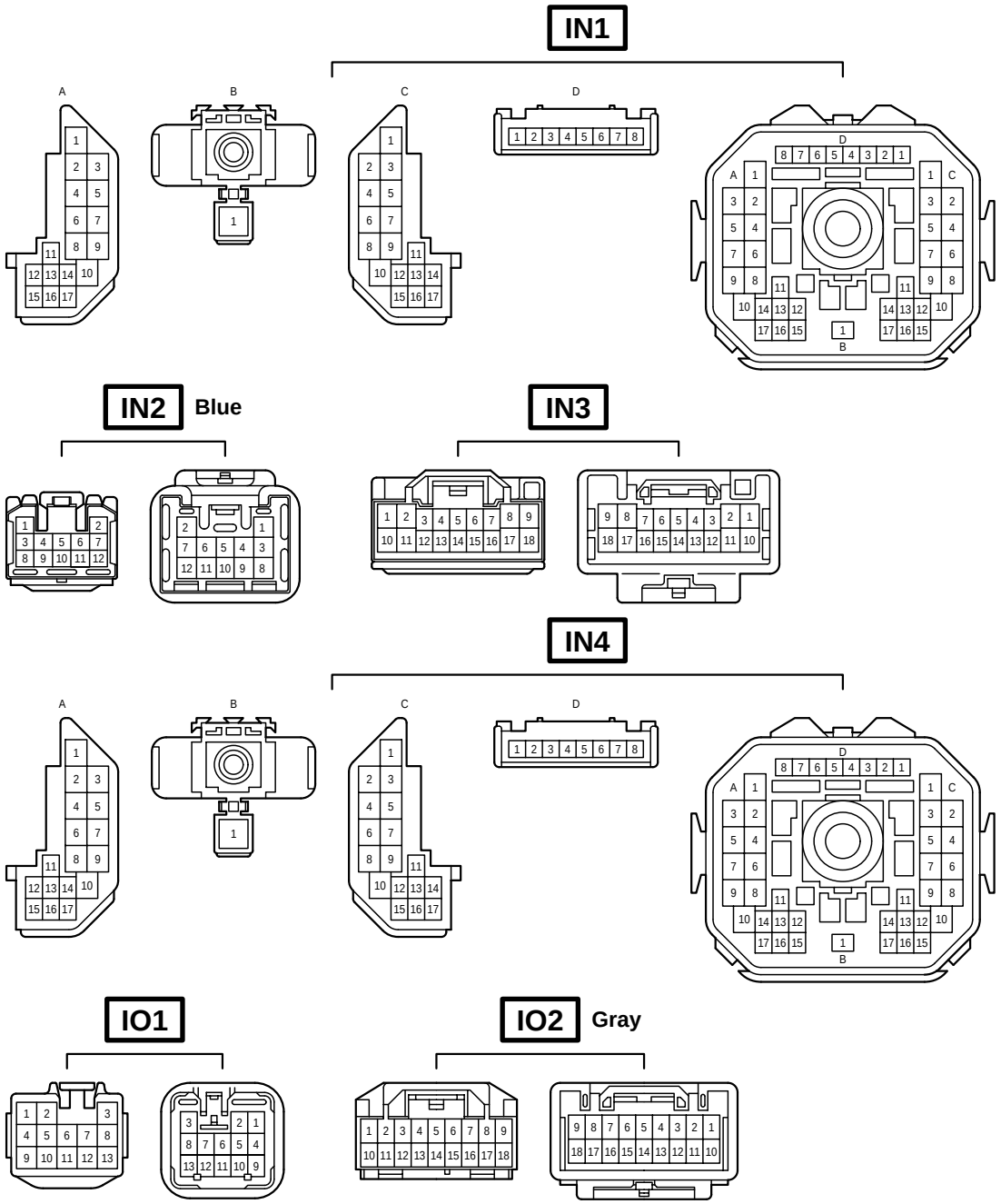

Code	Joining Wire Harness and Wire Harness (Connector Location)
IN1	Instrument Panel Wire and Floor Wire (Right Kick Panel)
IN2	
IN3	
IN4	
IO1	Front Door RH Wire and Instrument Panel Wire (Right Kick Panel)
IO2	

▭ : Location of Connector Joining Wire Harness and Wire Harness

[RHD : 5–Door]

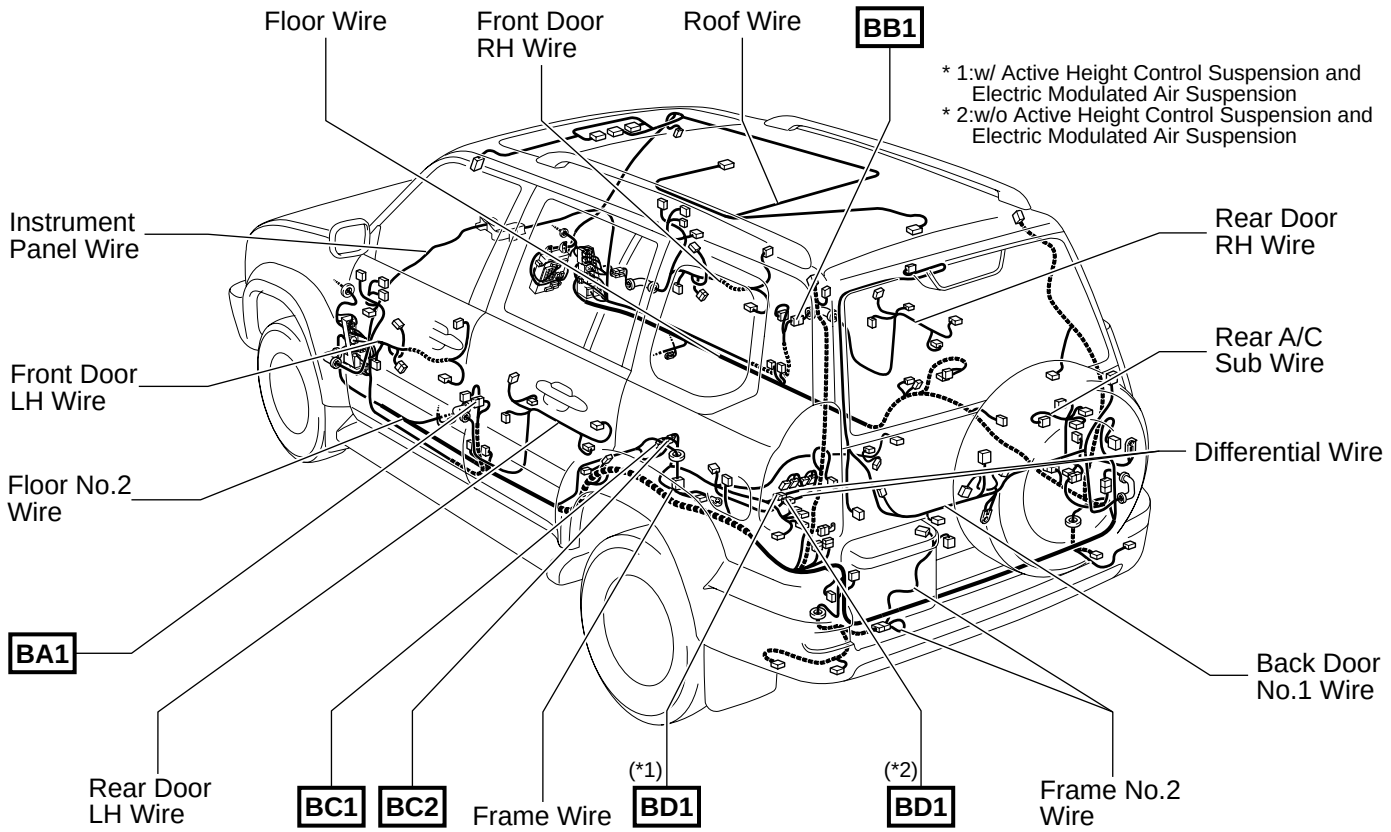

▽ : Location of Ground Points

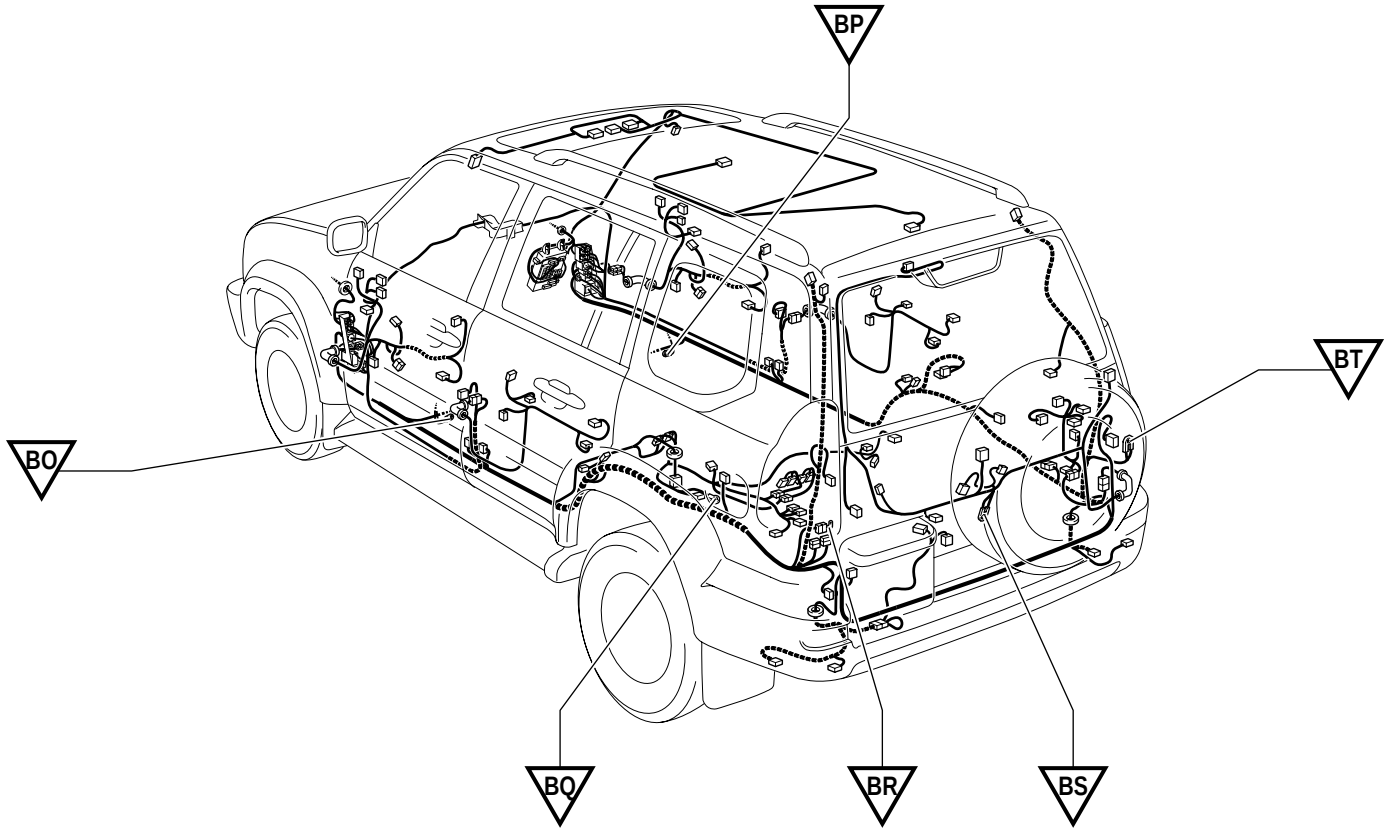

Connector Joining Wire Harness and Wire Harness

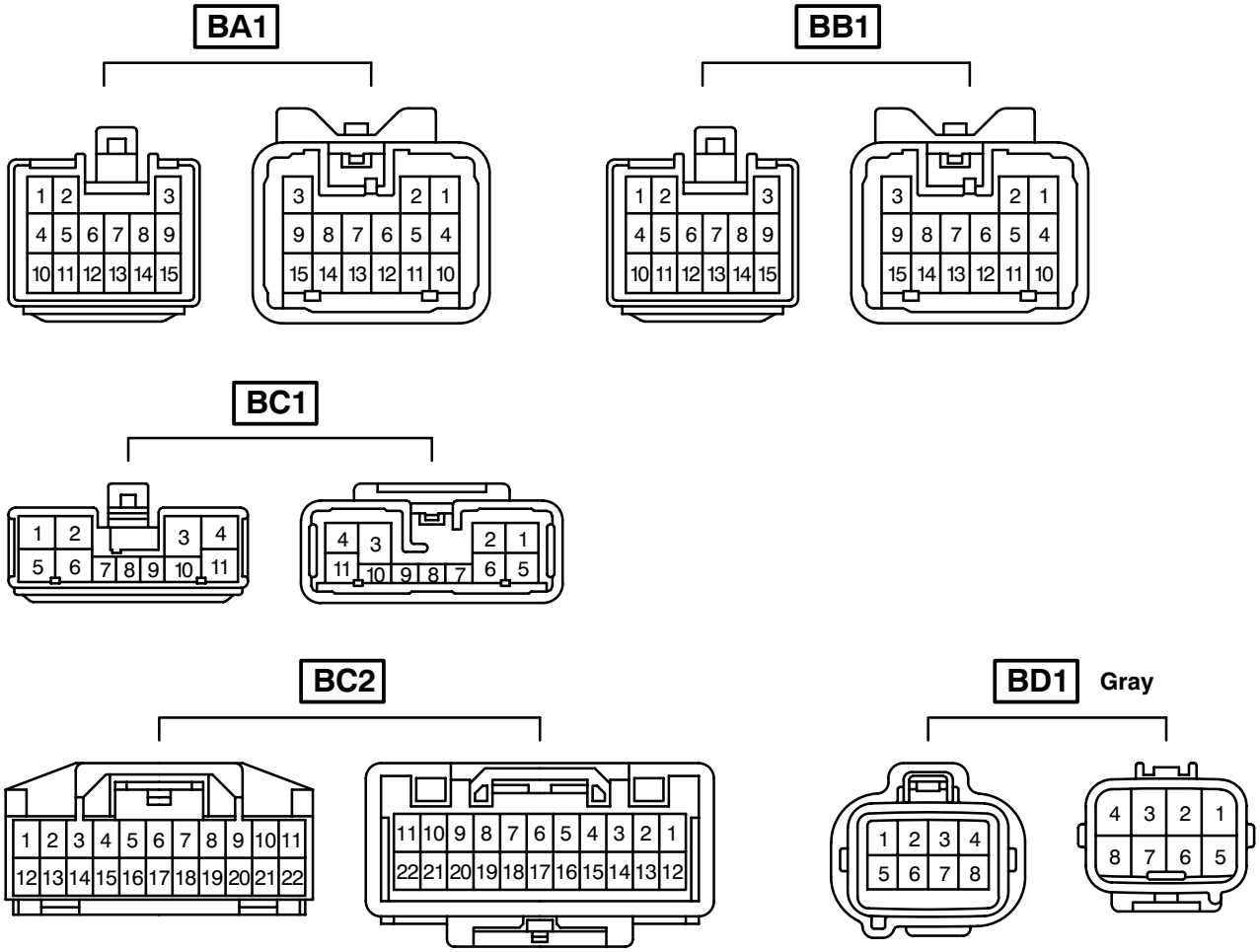

Code	Joining Wire Harness and Wire Harness (Connector Location)
BA1	Rear Door LH Wire and Instrument Panel Wire (Center Pillar LH)
BB1	Rear Door RH Wire and Instrument Panel Wire (Center Pillar RH)
BC1	Frame Wire and Floor No.2 Wire (Under the Left Side of Rear Seat Cushion)
BC2	
BD1	Frame Wire and Differential Wire (Left Side of the No.6 Cross Member)

▭ : Location of Connector Joining Wire Harness and Wire Harness

[RHD : 5–Door]

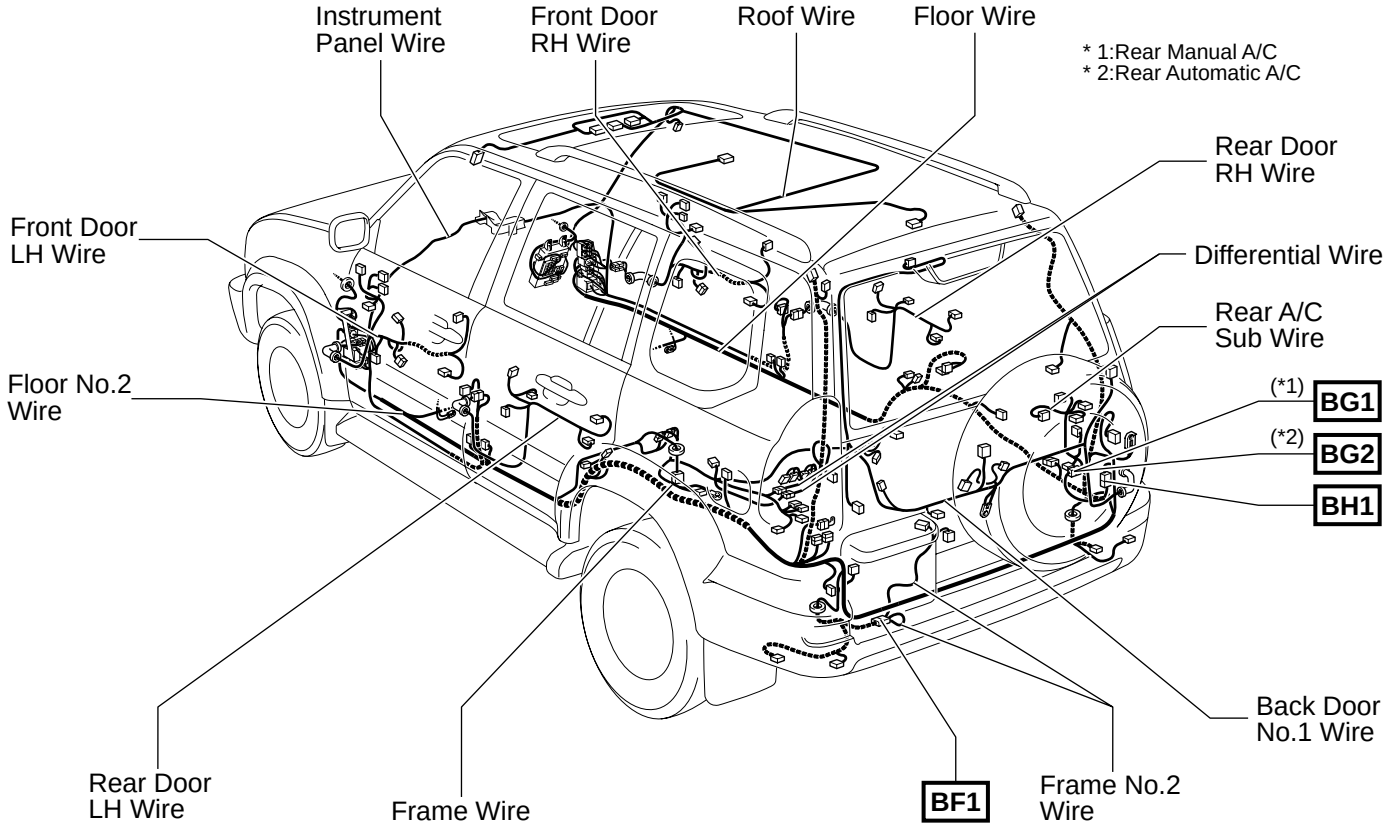

⬡ : Location of Splice Points

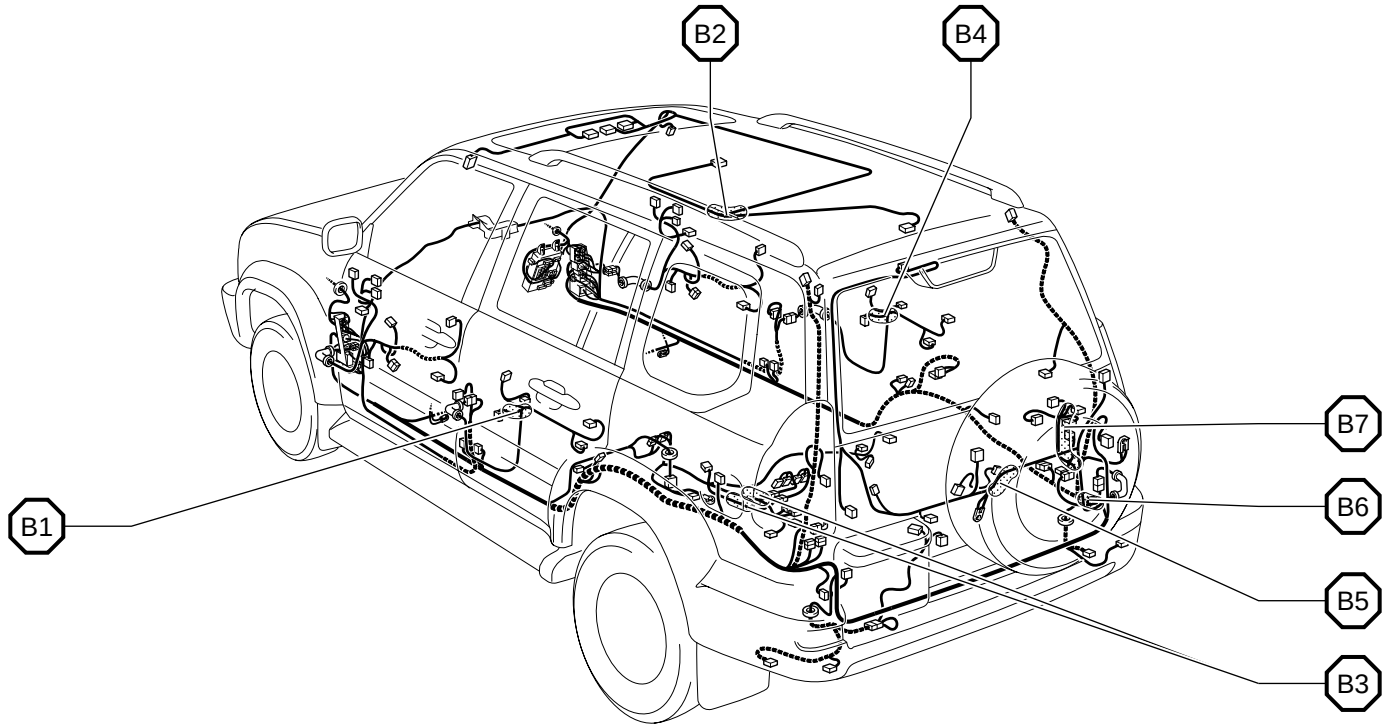

Connector Joining Wire Harness and Wire Harness

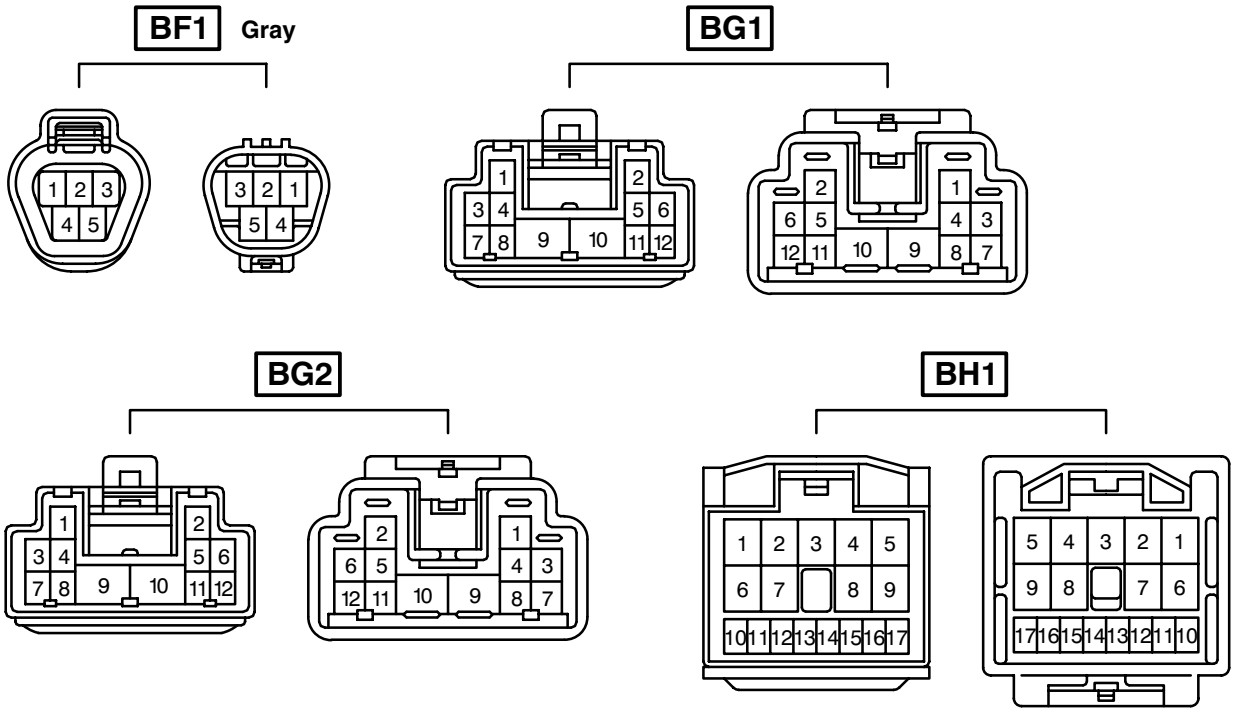

Code	Joining Wire Harness and Wire Harness (Connector Location)
BF1	Floor No.2 Wire and Frame No.2 Wire (Left Side of the Rear Floor)
BG1	Floor Wire and Rear A/C Sub Wire (Right Quarter Panel Inner)
BG2	
BH1	Back Door No.1 Wire and Floor Wire (Right Quarter Panel Inner)

▭ : Location of Connector Joining Wire Harness and Wire Harness

▽ : Location of Ground Points

[RHD : 3–Door]

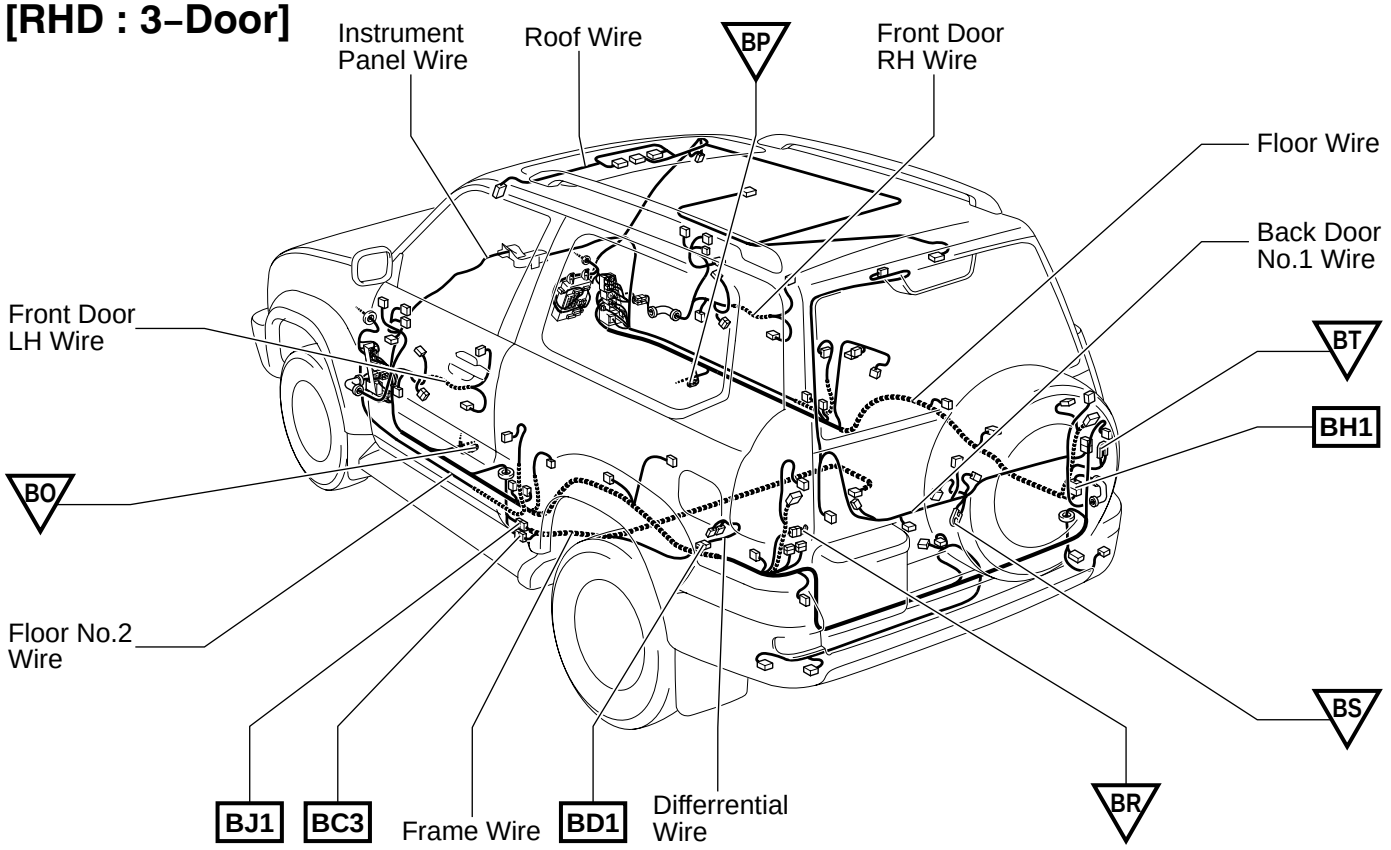

⬡ : Location of Splice Points

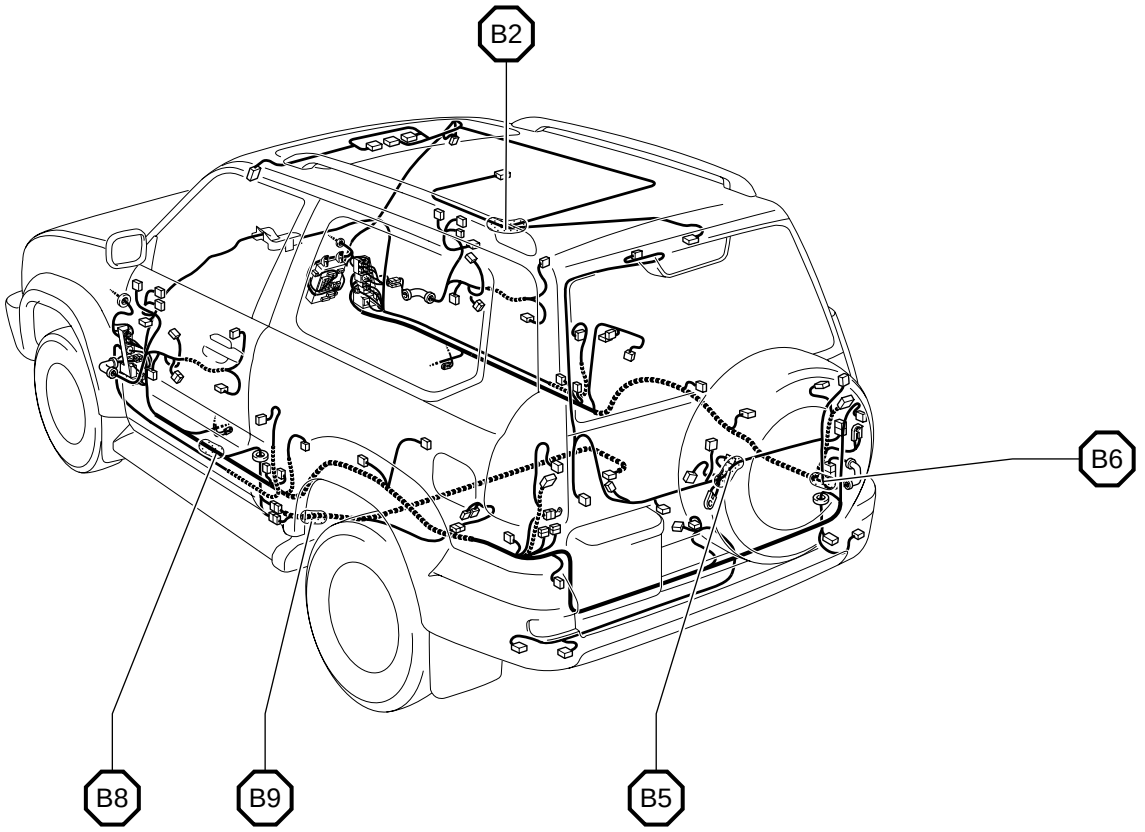

Connector Joining Wire Harness and Wire Harness

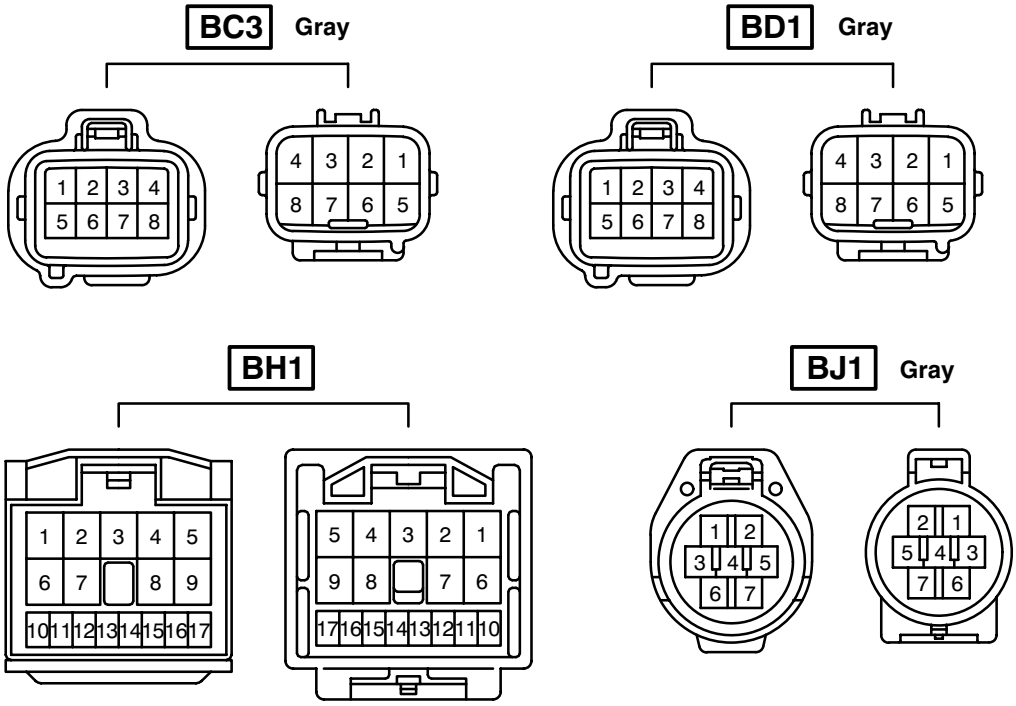

Code	Joining Wire Harness and Wire Harness (Connector Location)
BC3	Frame Wire and Floor No.2 Wire (Frame Side Rail LH)
BD1	Frame Wire and Differential Wire (Left Side of the No.6 Cross Member)
BH1	Back Door No.1 Wire and Floor Wire (Right Quarter Panel Inner)
BJ1	Floor No.2 Wire and Frame Wire (Frame Side Rail LH)

LAND CRUISER / LAND CRUISER PRADO ELECTRICAL WIRING DIAGRAM SYSTEM CIRCUITS

	Page
ABS	572
Accessory Meter	642
Active Height Control Suspension	580
Air Conditioner (Automatic A/C)	694
Air Conditioner (Manual A/C Except 1GR-FE)	712
Air Conditioner (Manual A/C 1GR-FE)	708
Back-Up Light (Diesel)	346
Back-Up Light (Gasoline)	342
Center Differential Lock	592
Charging (Gasoline)	152
Charging (1KD-FTV)	154
Charging (1KZ-TE, 5L-E)	158
Cigarette Lighter	624
Combination Meter	672
Condenser Fan	684
Cooler Box	726
Cruise Control (1GR-FE)	512
Cruise Control (1KD-FTV)	520
Cruise Control (1KZ-TE)	528
Door Lock Control (LHD)	426
Door Lock Control (RHD)	438
Double Locking	450
ECT and A/T Indicator (1GR-FE)	458
ECT and A/T Indicator (1KD-FTV)	488
ECT and A/T Indicator (1KZ-TE)	500
ECT and A/T Indicator (3RZ-FE Leaded Gasoline)	480
ECT and A/T Indicator (3RZ-FE Unleaded Gasoline)	470
Electric Modulated Air Suspension	580
Engine Control (1GR-FE)	162
Engine Control (1KD-FTV)	196
Engine Control (1KZ-TE)	210
Engine Control (3RZ-FE Leaded Gasoline)	186
Engine Control (3RZ-FE Unleaded Gasoline)	174
Engine Control (5L-E)	222
Engine Immobiliser System (Except 3RZ-FE Unleaded Gasoline)	236
Engine Immobiliser System (3RZ-FE Unleaded Gasoline)	232
Front Fog Light	298
Front Wiper and Washer	364
Fuel Heater	160
Headlight (w/ Daytime Running Light)	288
Headlight (w/o Daytime Running Light)	294
Headlight Beam Level Control	356
Headlight Cleaner	360
Horn	626
Ignition (1GR-FE)	142
Ignition (3RZ-FE Leaded Gasoline)	150
Ignition (3RZ-FE Unleaded Gasoline)	146
Illumination	326
Interior Light	318

	Page
Key Reminder	350
Light Auto Turn Off	306
Mirror Heater	616
Moon Roof	608
Multiplex Communication System (LHD)	240
Multiplex Communication System (RHD)	264
Multiplex Communication System (Communication Bus) (LHD)	242
Multiplex Communication System (Communication Bus) (RHD)	266
Navigation System (LHD)	648
Navigation System (RHD)	654
Option Connector (Wireless Door Lock Control)	418
Power Outlet	624
Power Seat	628
Power Source	128
Power Window (LHD w/ Jam Protection)	370
Power Window (LHD w/o Jam Protection)	378
Power Window (RHD w/ Jam Protection)	384
Power Window (RHD w/o Jam Protection)	392
Radio and Player (Built–in Type Amplifier)	668
Radio and Player (Separate Type Amplifier)	660
Rear Air Conditioner (Automatic A/C)	718
Rear Air Conditioner (Manual A/C)	722
Rear Differential Lock	596
Rear Fog Light	302
Rear Window Defogger	620
Rear Wiper and Washer	368
Remote Control Mirror	614
Seat Belt Warning	350
Seat Heater	632
Shift Lock	590
SRS	535
Starting (Diesel)	138
Starting (1GR–FE)	132
Starting (3RZ–FE)	134
Stop Light	338
Taillight	326
Theft Deterrent (LHD)	426
Theft Deterrent (RHD)	438
Trailer Towing	636
Turn Signal and Hazard Warning Light	312
Viscous Heater	688
VSC (LHD A/T)	542
VSC (LHD M/T)	552
VSC (RHD)	562
Wireless Door Lock Control (LHD)	398
Wireless Door Lock Control (RHD)	408
4WD	604

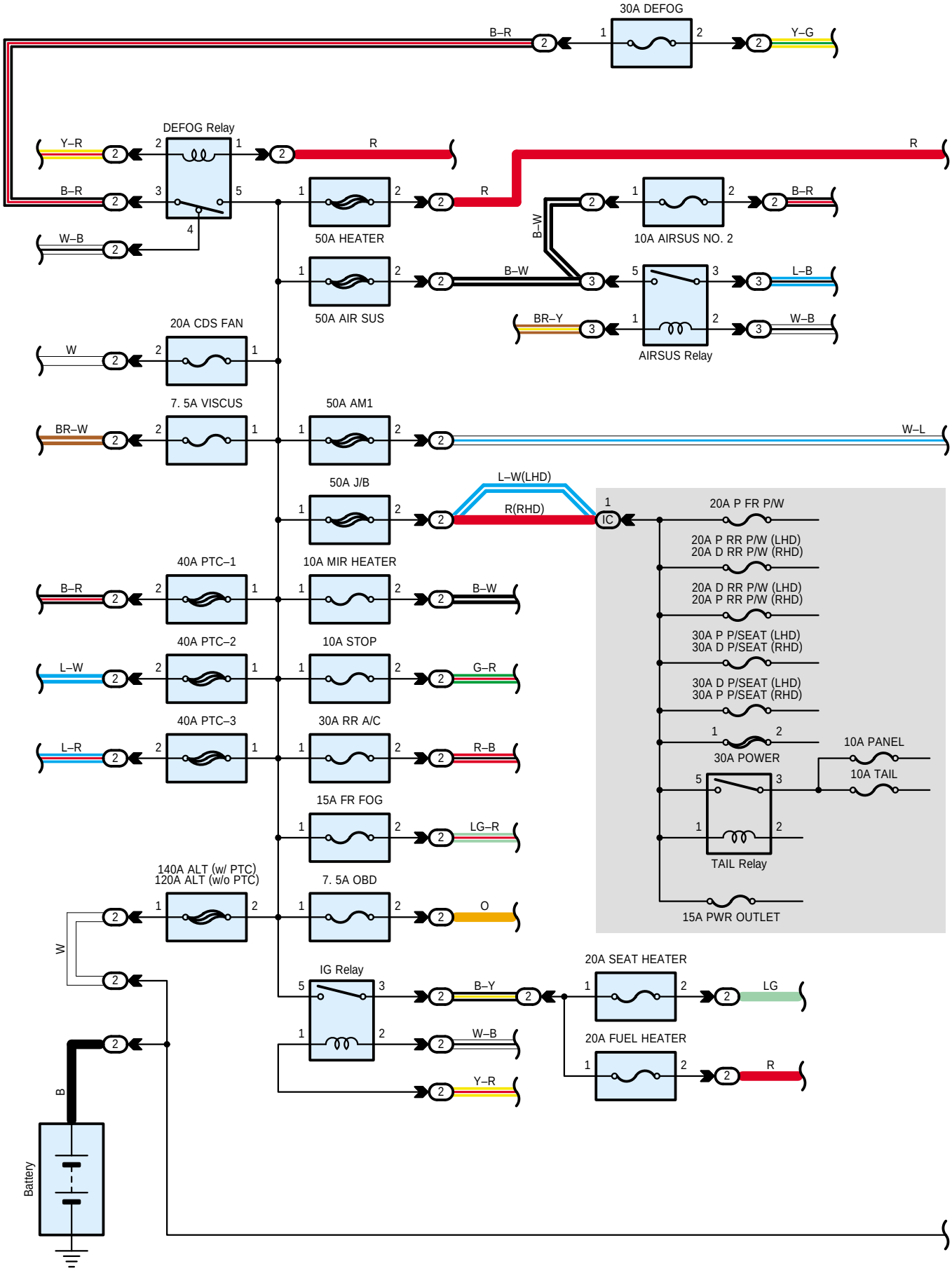
30A DEFOG
B–R
Y–G
DEFOG Relay
Y–R
R
B–R
W–B
50A HEATER
10A AIRSUS NO. 2
B–W
50A AIR SUS
L–B
BR–Y
W–B
AIRSUS Relay
20A CDS FAN
W
7. 5A VISCUS
BR–W
50A AM1
W–L
50A J/B
L–W(LHD)
R(RHD)
IC
20A P FR P/W
20A P RR P/W (LHD)
20A D RR P/W (RHD)
20A D RR P/W (LHD)
20A P RR P/W (RHD)
30A P P/SEAT (LHD)
30A D P/SEAT (RHD)
30A D P/SEAT (LHD)
30A P P/SEAT (RHD)
30A POWER
10A PANEL
10A TAIL
TAIL Relay
15A PWR OUTLET
40A PTC–1
10A MIR HEATER
40A PTC–2
L–W
10A STOP
G–R
40A PTC–3
L–R
30A RR A/C
R–B
15A FR FOG
LG–R
140A ALT (w/ PTC)
120A ALT (w/o PTC)
7. 5A OBD
O
IG Relay
B–Y
20A SEAT HEATER
LG
20A FUEL HEATER
Y–R
Battery
B

∗ 1 : w/ Daytime Running Light
∗ 2 : w/o Daytime Running Light

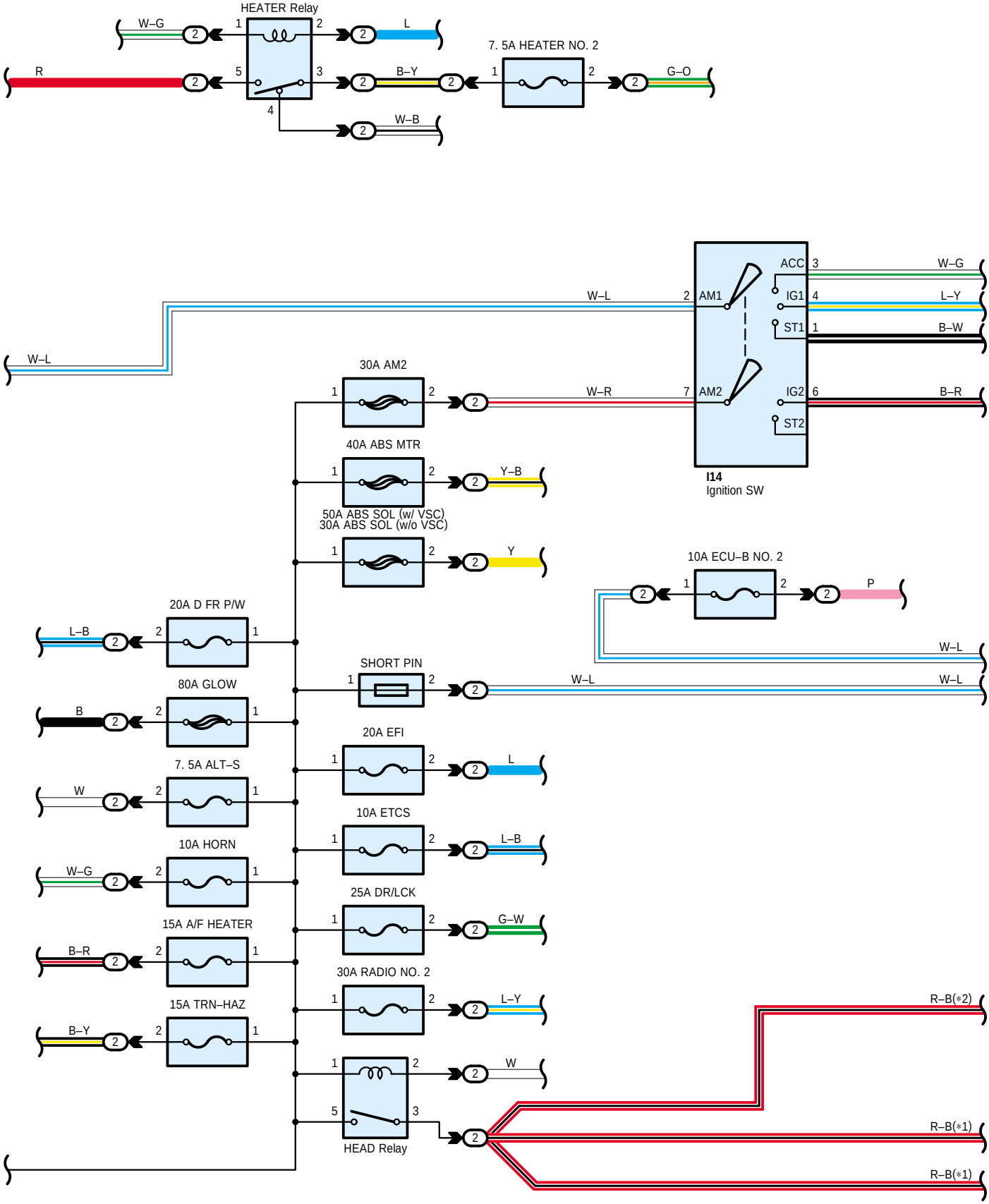

Power Source

∗ 1 : w/ Daytime Running Light
∗ 2 : w/o Daytime Running Light

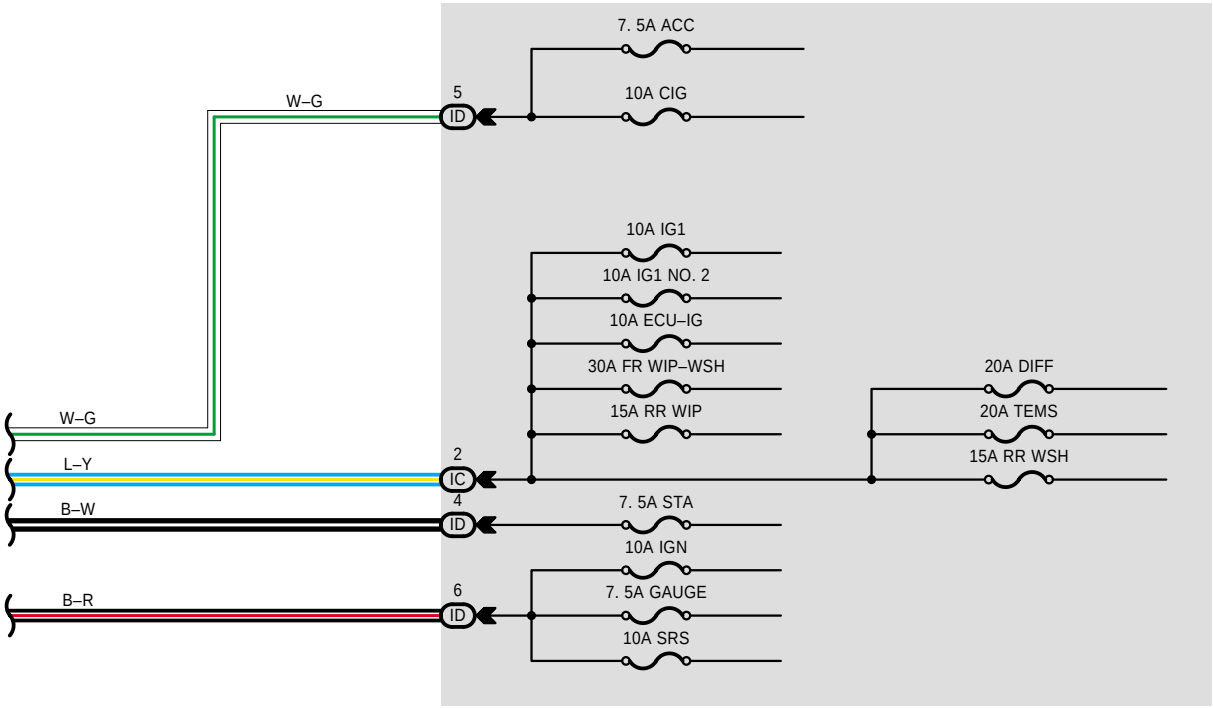

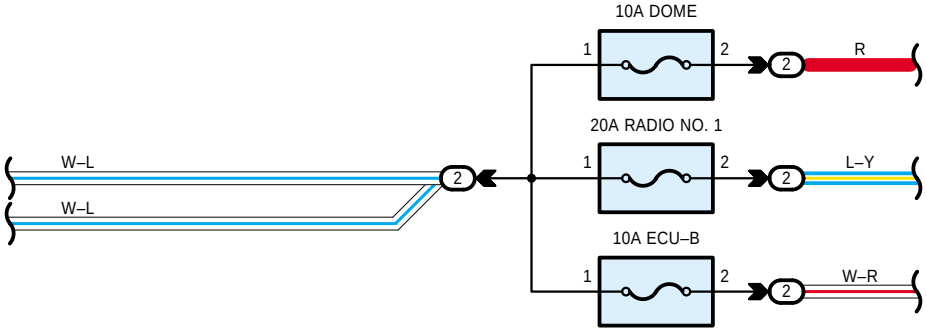

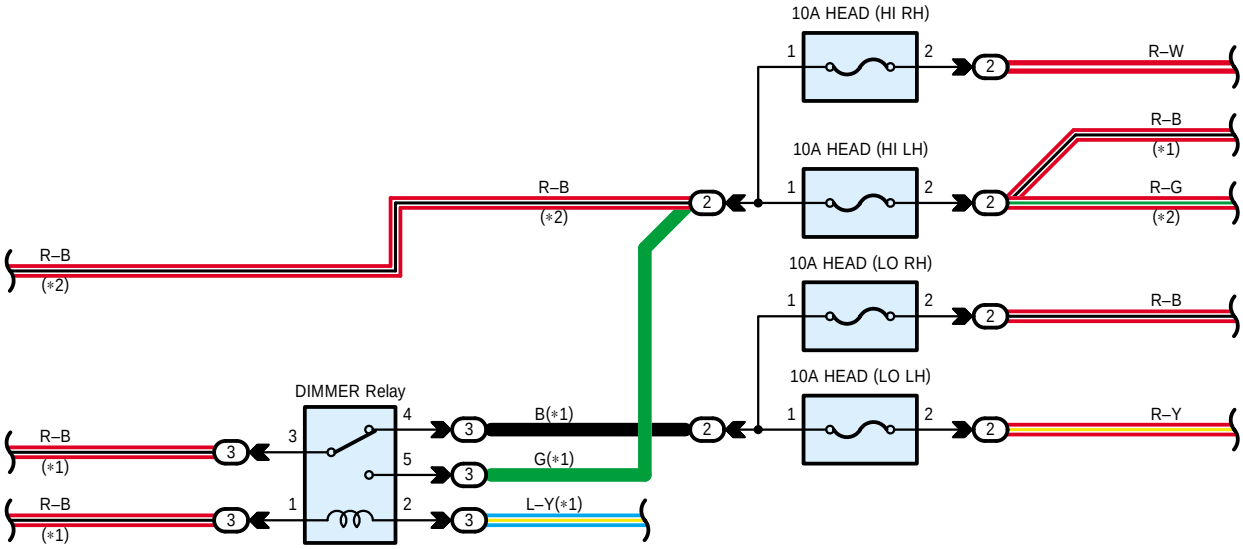

Service Hints

HEAD Relay

5–3 : Closed with light control SW at HEAD position or dimmer SW at FLASH position

I14 Ignition SW

2–3 : Closed with ignition key at ACC or ON position
2–4 : Closed with ignition key at ON or ST position
2–1 : Closed with ignition key at ST position
7–6 : Closed with ignition key at ON or ST position

TAIL Relay

3–5 : Closed with light control SW at TAIL or HEAD position

: Parts Location

Code	See Page	Code	See Page	Code	See Page
I14	50 (LHD)	I14	70 (RHD)		

: Relay Blocks

Code	See Page	Relay Blocks (Relay Block Location)
2	23	Engine Room R/B (Engine Compartment Left)
3	24	Engine Room R/B No.3 (Engine Compartment Left)

: Junction Block and Wire Harness Connector

Code	See Page	Junction Block and Wire Harness (Connector Location)
IC	26 (LHD)	Engine Room Main Wire and Driver Side J/B (Lower Finish Panel)
	28 (RHD)	
ID	26 (LHD)	
	28 (RHD)	

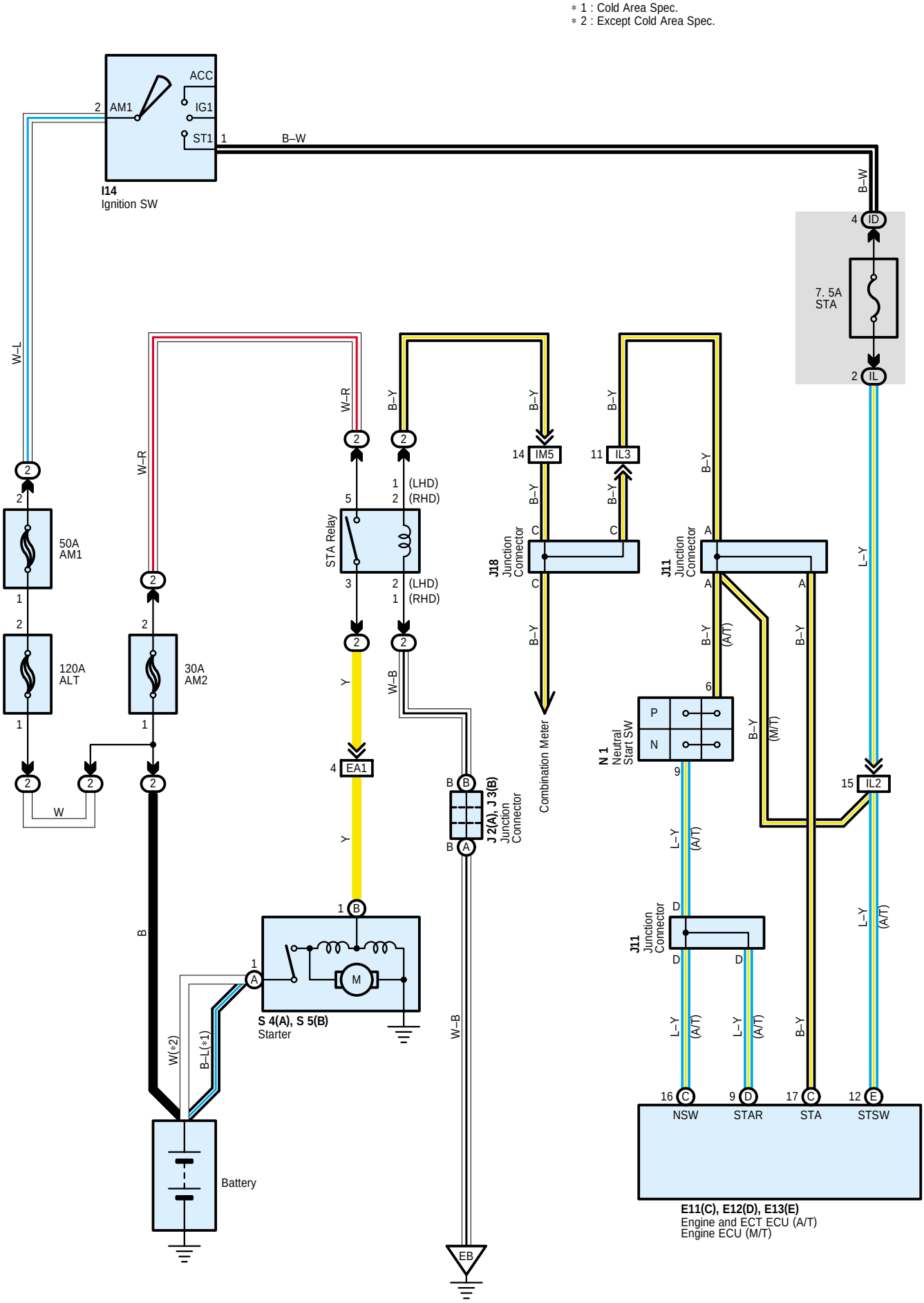
* 1 : Cold Area Spec.
* 2 : Except Cold Area Spec.
I14
Ignition SW
ACC
IG1
ST1
AM1
B–W
W–L
W–R
50A
AM1
120A
ALT
30A
AM2
W
B
W(*2)
B–L(*1)
Battery
STA Relay
(LHD)
(RHD)
Y
EA1
S 4(A), S 5(B)
Starter
M
W–B
EB
J2(A), J3(B)
Junction
Connector
J18
Junction
Connector
IM5
IL3
Combination Meter
B–Y
7. 5A
STA
ID
IL
L–Y
J11
Junction
Connector
(A/T)
(M/T)
N 1
Neutral
Start SW
P
N
IL2
NSW
STAR
STA
STSW
E11(C), E12(D), E13(E)
Engine and ECT ECU (A/T)
Engine ECU (M/T)

Service Hints

I14 Ignition SW

2–1 : Closed with the ignition SW at ST position
7–8 : Closed with the ignition SW at ST position

N1 Neutral Start SW

9–6 : Closed with the A/T shift lever in P or N position

S4 (A), S5 (B) Starter

Point closed with the neutral start SW at P or N position and the ignition SW at ST position (A/T)
Point closed with the ignition SW at ST position (M/T)

: Parts Location

Code		See Page	Code		See Page	Code		See Page
E11	C	49 (LHD)	J2	A	39 (*1)	N1		39 (*1)
		69 (RHD)			59 (*10)			59 (*10)
E12	D	49 (LHD)	J3	B	39 (*1)	S4	A	39 (*1)
		69 (RHD)			59 (*10)			59 (*10)
E13	E	49 (LHD)	J11		50 (LHD)	S5	B	39 (*1)
		69 (RHD)			70 (RHD)			59 (*10)
I14		50 (LHD)	J18		50 (LHD)			
		70 (RHD)			70 (RHD)			

: Relay Blocks

Code	See Page	Relay Blocks (Relay Block Location)
2	23	Engine Room R/B (Engine Compartment Left)

: Junction Block and Wire Harness Connector

Code	See Page	Junction Block and Wire Harness (Connector Location)
ID	26 (LHD)	Engine Room Main Wire and Driver Side J/B (Lower Finish Panel)
	28 (RHD)	
IL	27 (LHD)	Instrument Panel Wire and Driver Side J/B (Lower Finish Panel)
	29 (RHD)	

: Connector Joining Wire Harness and Wire Harness

Code	See Page	Joining Wire Harness and Wire Harness (Connector Location)
EA1	78 (*1)	Engine No.2 Wire and Engine Room Main Wire (Near the Engine Room R/B)
	102 (*10)	
IL2	92 (LHD)	Engine Wire and Instrument Panel Wire (Right Side of the Blower Unit)
	116 (RHD)	Engine Wire and Instrument Panel Wire (Left Side of the Blower Unit)
IL3	92 (LHD)	Engine Wire and Instrument Panel Wire (Right Side of the Blower Unit)
	116 (RHD)	Engine Wire and Instrument Panel Wire (Left Side of the Blower Unit)
IM5	92 (LHD)	Instrument Panel Wire and Engine Room Main Wire (Right Kick Panel)
	116 (RHD)	

: Ground Points

Code	See Page	Ground Points Location
EB	78 (*1)	Front Left Fender
	102 (*10)	

* 1 : LHD 1GR–FE * 2 : LHD 3RZ–FE * 3 : LHD 1KD–FTV * 4 : LHD 1KZ–TE * 5 : LHD 5L–E * 6 : LHD 5–Door * 7 : LHD 3–Door
* 8 : LHD 8Way Power Seat * 9 : LHD Except 8Way Power Seat * 10 : RHD 1GR–FE * 11 : RHD 3RZ–FE * 12 : RHD 1KD–FTV
* 13 : RHD 1KZ–TE * 14 : RHD 5L–E * 15 : RHD 5–Door * 16 : RHD 3–Door * 17 : RHD 8Way Power Seat
* 18 : RHD Except 8Way Power Seat

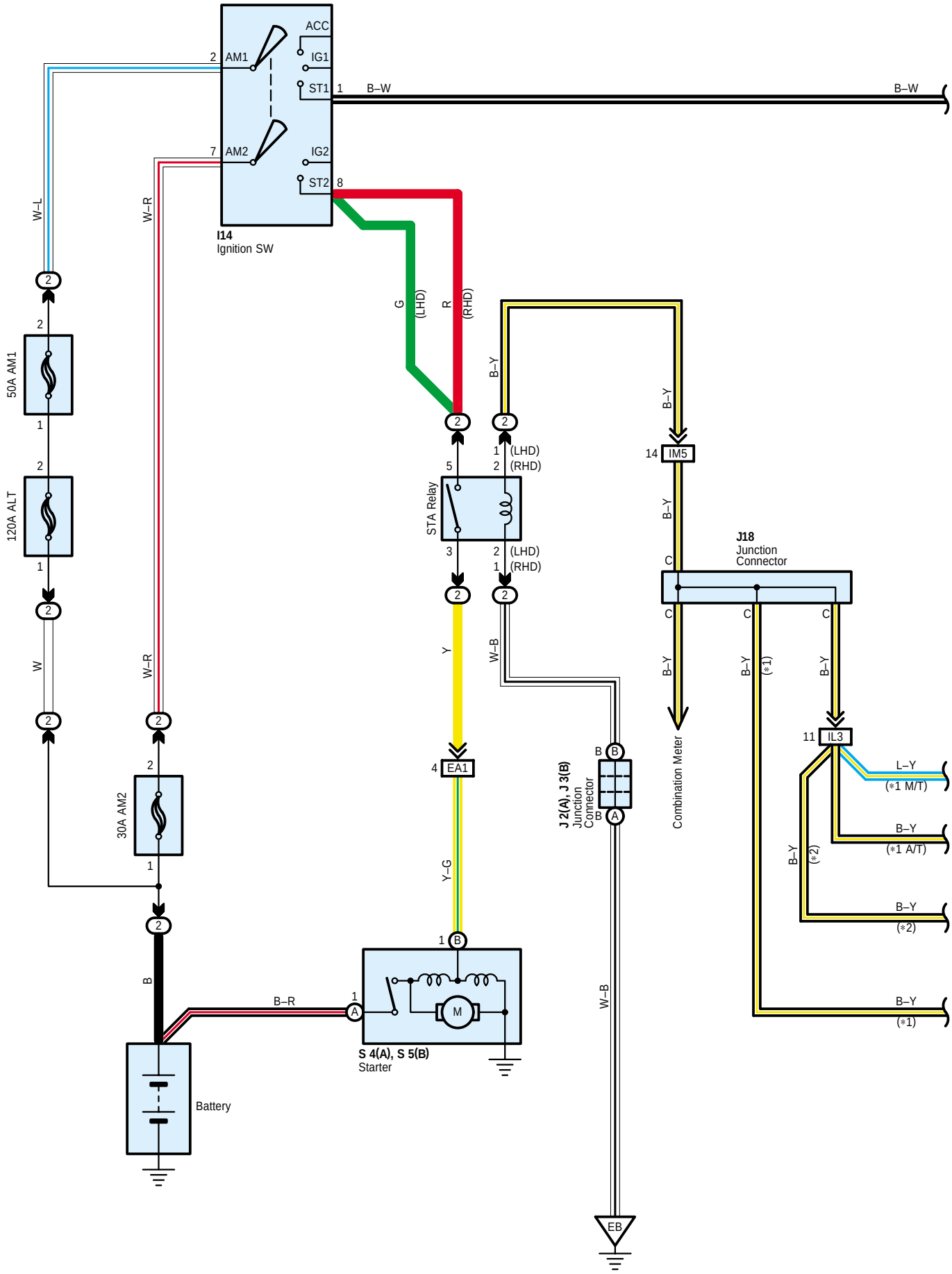
ACC
AM1
IG1
ST1
B–W
B–W
AM2
IG2
ST2
I14
Ignition SW
W–L
W–R
W–R
50A AM1
120A ALT
W
30A AM2
B
B–R
Battery
G
(LHD)
R
(RHD)
B–Y
B–Y
STA Relay
(LHD)
(RHD)
(LHD)
(RHD)
Y
EA1
Y–G
W–B
J 2(A), J 3(B)
Junction
Connector
W–B
EB
S 4(A), S 5(B)
Starter
IM5
B–Y
B–Y
J18
Junction
Connector
Combination Meter
B–Y
B–Y
(*1)
B–Y
IL3
L–Y
(*1 M/T)
B–Y
(*1 A/T)
B–Y
(*2)
B–Y
(*2)
B–Y
(*1)

∗ 1 : Unleaded Gasoline
∗ 2 : Leaded Gasoline

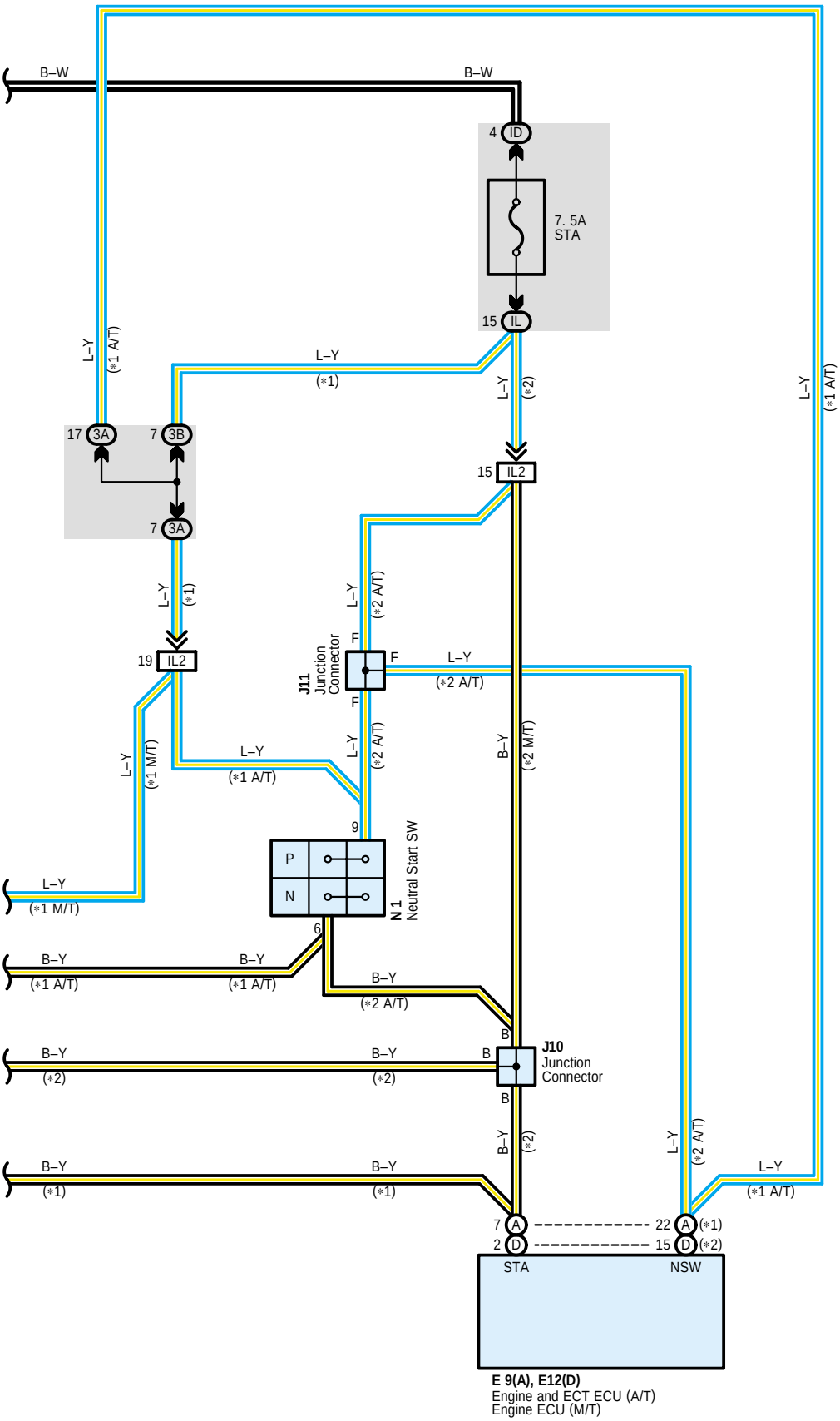

Service Hints

I14 Ignition SW

2-1 : Closed with the ignition SW at ST position
7-8 : Closed with the ignition SW at ST position

N1 Neutral Start SW

9-6 : Closed with the A/T shift lever in P or N position

S4 (A), S5 (B) Starter

Point closed with the neutral start SW at P or N position and the ignition SW at ST position (A/T)
Point closed with the ignition SW at ST position (M/T)

: Parts Location

Code		See Page	Code		See Page	Code		See Page
E9	A	49 (LHD)	J3	B	41 (*2)	N1		41 (*2)
		69 (RHD)			61 (*11)			61 (*11)
E12	D	49 (LHD)	J10		50 (LHD)	S4	A	41 (*2)
		69 (RHD)			70 (RHD)			61 (*11)
I14		50 (LHD)	J11		50 (LHD)	S5	B	41 (*2)
		70 (RHD)			70 (RHD)			61 (*11)
J2	A	41 (*2)	J18		50 (LHD)			
		61 (*11)			70 (RHD)			

: Relay Blocks

Code	See Page	Relay Blocks (Relay Block Location)
2	23	Engine Room R/B (Engine Compartment Left)

: Junction Block and Wire Harness Connector

Code	See Page	Junction Block and Wire Harness (Connector Location)
ID	26 (LHD)	Engine Room Main Wire and Driver Side J/B (Lower Finish Panel)
	28 (RHD)	
IL	27 (LHD)	Instrument Panel Wire and Driver Side J/B (Lower Finish Panel)
	29 (RHD)	
3A	36 (LHD)	Instrument Panel Wire and J/B No.3 (Instrument Panel Reinforcement Right)
	36 (RHD)	Instrument Panel Wire and J/B No.3 (Instrument Panel Reinforcement Left)
3B	36 (LHD)	Instrument Panel Wire and J/B No.3 (Instrument Panel Reinforcement Right)
	36 (RHD)	Instrument Panel Wire and J/B No.3 (Instrument Panel Reinforcement Left)

: Connector Joining Wire Harness and Wire Harness

Code	See Page	Joining Wire Harness and Wire Harness (Connector Location)
EA1	80 (*2)	Engine No.2 Wire and Engine Room Main Wire (Near the Engine Room R/B)
	104 (*11)	
IL2	92 (LHD)	Engine Wire and Instrument Panel Wire (Right Side of the Blower Unit)
	116 (RHD)	Engine Wire and Instrument Panel Wire (Left Side of the Blower Unit)
IL3	92 (LHD)	Engine Wire and Instrument Panel Wire (Right Side of the Blower Unit)
	116 (RHD)	Engine Wire and Instrument Panel Wire (Left Side of the Blower Unit)
IM5	92 (LHD)	Instrument Panel Wire and Engine Room Main Wire (Right Kick Panel)
	116 (RHD)	

* 1 : LHD 1GR-FE * 2 : LHD 3RZ-FE * 3 : LHD 1KD-FTV * 4 : LHD 1KZ-TE * 5 : LHD 5L-E * 6 : LHD 5-Door * 7 : LHD 3-Door
* 8 : LHD 8Way Power Seat * 9 : LHD Except 8Way Power Seat * 10 : RHD 1GR-FE * 11 : RHD 3RZ-FE * 12 : RHD 1KD-FTV
* 13 : RHD 1KZ-TE * 14 : RHD 5L-E * 15 : RHD 5-Door * 16 : RHD 3-Door * 17 : RHD 8Way Power Seat
* 18 : RHD Except 8Way Power Seat

▽ : **Ground Points**

Code	See Page	Ground Points Location
EB	80 (*2)	Front Left Fender
	104 (*11)	

* 1 : LHD 1GR-FE * 2 : LHD 3RZ-FE * 3 : LHD 1KD-FTV * 4 : LHD 1KZ-TE * 5 : LHD 5L-E * 6 : LHD 5-Door * 7 : LHD 3-Door
* 8 : LHD 8Way Power Seat * 9 : LHD Except 8Way Power Seat * 10 : RHD 1GR-FE * 11 : RHD 3RZ-FE * 12 : RHD 1KD-FTV
* 13 : RHD 1KZ-TE * 14 : RHD 5L-E * 15 : RHD 5-Door * 16 : RHD 3-Door * 17 : RHD 8Way Power Seat
* 18 : RHD Except 8Way Power Seat

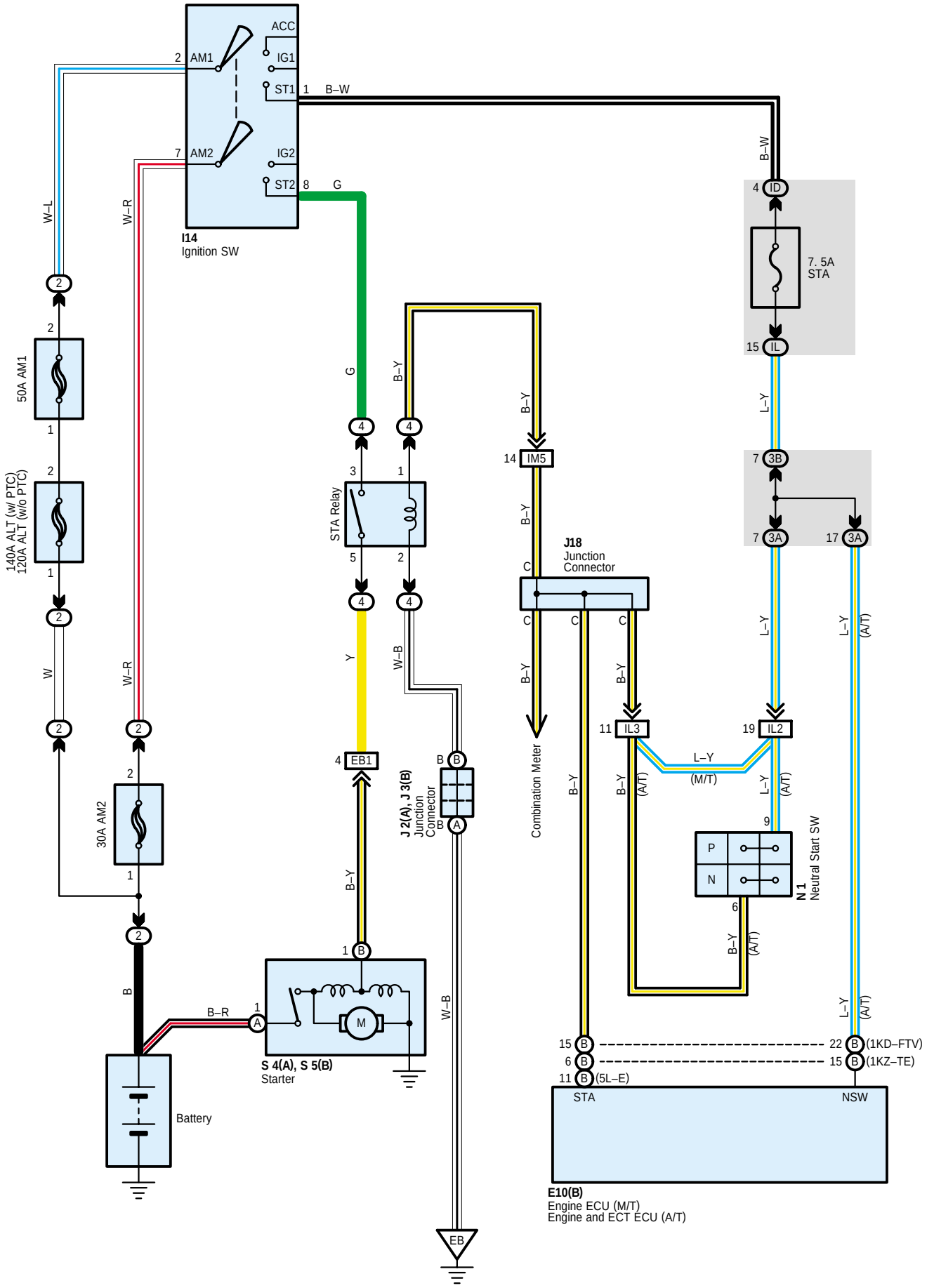
ACC
IG1
ST1
AM1
IG2
ST2
AM2
I14
Ignition SW
B–W
G
W–L
W–R
50A AM1
140A ALT (w/ PTC)
120A ALT (w/o PTC)
W
30A AM2
B
B–R
Battery
STA Relay
Y
EB1
B–Y
S 4(A), S 5(B)
Starter
W–B
J 2(A), J 3(B)
Junction
Connector
EB
IM5
J18
Junction
Connector
Combination Meter
7. 5A
STA
ID
IL
3B
3A
IL3
IL2
L–Y
(M/T)
(A/T)
N 1
Neutral Start SW
P
N
(1KD–FTV)
(1KZ–TE)
(5L–E)
STA
NSW
E10(B)
Engine ECU (M/T)
Engine and ECT ECU (A/T)

Service Hints

I14 Ignition SW

2–1 : Closed with the ignition SW at ST position
7–8 : Closed with the ignition SW at ST position

N1 Neutral Start SW

9–6 : Closed with the A/T shift lever in P or N position

S4 (A), S5 (B) Starter

Point closed with the neutral start SW at P or N position and the ignition SW at ST position (A/T)
Point closed with the ignition SW at ST position (M/T)

: Parts Location

Code		See Page	Code		See Page	Code		See Page
E10	B	49 (LHD)	J3	B	47 (*5)	S4	A	47 (*5)
		69 (RHD)			63 (*12)			63 (*12)
I14		50 (LHD)			65 (*13)			65 (*13)
		70 (RHD)			67 (*14)			67 (*14)
J2	A	43 (*3)	J18		50 (LHD)	S5	B	43 (*3)
		45 (*4)			70 (RHD)			45 (*4)
		47 (*5)	N1		43 (*3)			47 (*5)
		63 (*12)			45 (*4)			63 (*12)
		65 (*13)			63 (*12)			65 (*13)
		67 (*14)			65 (*13)			67 (*14)
J3	B	43 (*3)	S4	A	43 (*3)			
		45 (*4)			45 (*4)			

: Relay Blocks

Code	See Page	Relay Blocks (Relay Block Location)
2	23	Engine Room R/B (Engine Compartment Left)
4	25	Engine Room R/B No.4 (Engine Compartment Left)

: Junction Block and Wire Harness Connector

Code	See Page	Junction Block and Wire Harness (Connector Location)
ID	26 (LHD)	Engine Room Main Wire and Driver Side J/B (Lower Finish Panel)
	28 (RHD)	
IL	27 (LHD)	Instrument Panel Wire and Driver Side J/B (Lower Finish Panel)
	29 (RHD)	
3A	36 (LHD)	Instrument Panel Wire and J/B No.3 (Instrument Panel Reinforcement Right)
	36 (RHD)	Instrument Panel Wire and J/B No.3 (Instrument Panel Reinforcement Left)
3B	36 (LHD)	Instrument Panel Wire and J/B No.3 (Instrument Panel Reinforcement Right)
	36 (RHD)	Instrument Panel Wire and J/B No.3 (Instrument Panel Reinforcement Left)

* 1 : LHD 1GR–FE * 2 : LHD 3RZ–FE * 3 : LHD 1KD–FTV * 4 : LHD 1KZ–TE * 5 : LHD 5L–E * 6 : LHD 5–Door * 7 : LHD 3–Door
* 8 : LHD 8Way Power Seat * 9 : LHD Except 8Way Power Seat * 10 : RHD 1GR–FE * 11 : RHD 3RZ–FE * 12 : RHD 1KD–FTV
* 13 : RHD 1KZ–TE * 14 : RHD 5L–E * 15 : RHD 5–Door * 16 : RHD 3–Door * 17 : RHD 8Way Power Seat
* 18 : RHD Except 8Way Power Seat

: Connector Joining Wire Harness and Wire Harness

Code	See Page	Joining Wire Harness and Wire Harness (Connector Location)
EB1	82 (*3)	Engine Room Main Wire and Engine Wire (Rear Side of the Engine Room R/B)
	84 (*4)	
	86 (*5)	
	106 (*12)	
	108 (*13)	
	110 (*14)	
IL2	92 (LHD)	Engine Wire and Instrument Panel Wire (Right Side of the Blower Unit)
	116 (RHD)	Engine Wire and Instrument Panel Wire (Left Side of the Blower Unit)
IL3	92 (LHD)	Engine Wire and Instrument Panel Wire (Right Side of the Blower Unit)
	116 (RHD)	Engine Wire and Instrument Panel Wire (Left Side of the Blower Unit)
IM5	92 (LHD)	Instrument Panel Wire and Engine Room Main Wire (Right Kick Panel)
	116 (RHD)	

: Ground Points

Code	See Page	Ground Points Location
EB	82 (*3)	Front Left Fender
	84 (*4)	
	86 (*5)	
	106 (*12)	
	108 (*13)	
	110 (*14)	

* 1 : LHD 1GR-FE * 2 : LHD 3RZ-FE * 3 : LHD 1KD-FTV * 4 : LHD 1KZ-TE * 5 : LHD 5L-E * 6 : LHD 5-Door * 7 : LHD 3-Door
* 8 : LHD 8Way Power Seat * 9 : LHD Except 8Way Power Seat * 10 : RHD 1GR-FE * 11 : RHD 3RZ-FE * 12 : RHD 1KD-FTV
* 13 : RHD 1KZ-TE * 14 : RHD 5L-E * 15 : RHD 5-Door * 16 : RHD 3-Door * 17 : RHD 8Way Power Seat
* 18 : RHD Except 8Way Power Seat

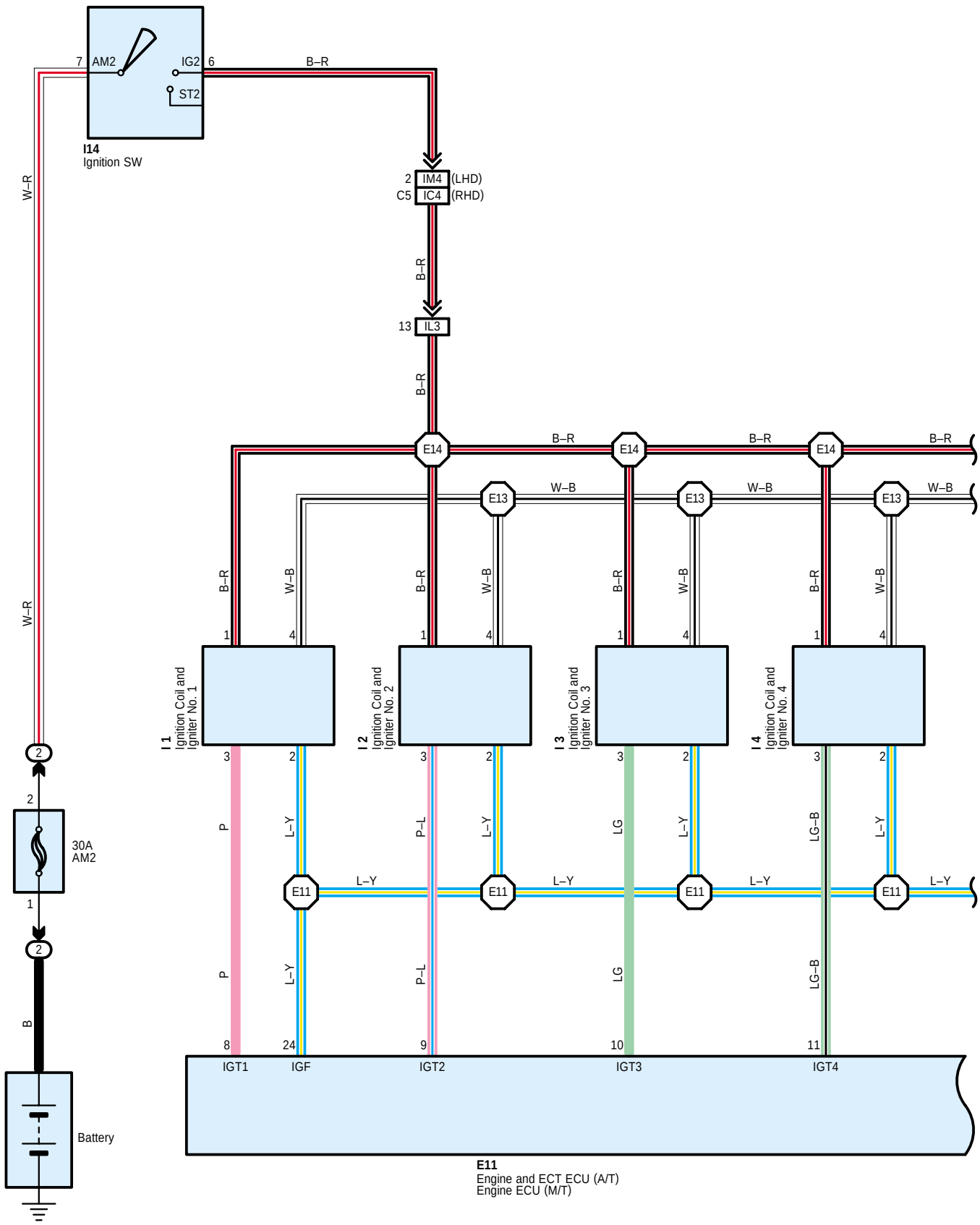
I14
Ignition SW
7 AM2
IG2 6
ST2
B–R
W–R
2 IM4 (LHD)
C5 IC4 (RHD)
13 IL3
E14
E13
E11
I 1
Ignition Coil and Igniter No. 1
I 2
Ignition Coil and Igniter No. 2
I 3
Ignition Coil and Igniter No. 3
I 4
Ignition Coil and Igniter No. 4
W–B
L–Y
P
P–L
LG
LG–B
30A
AM2
B
Battery
IGT1
IGF
IGT2
IGT3
IGT4
E11
Engine and ECT ECU (A/T)
Engine ECU (M/T)

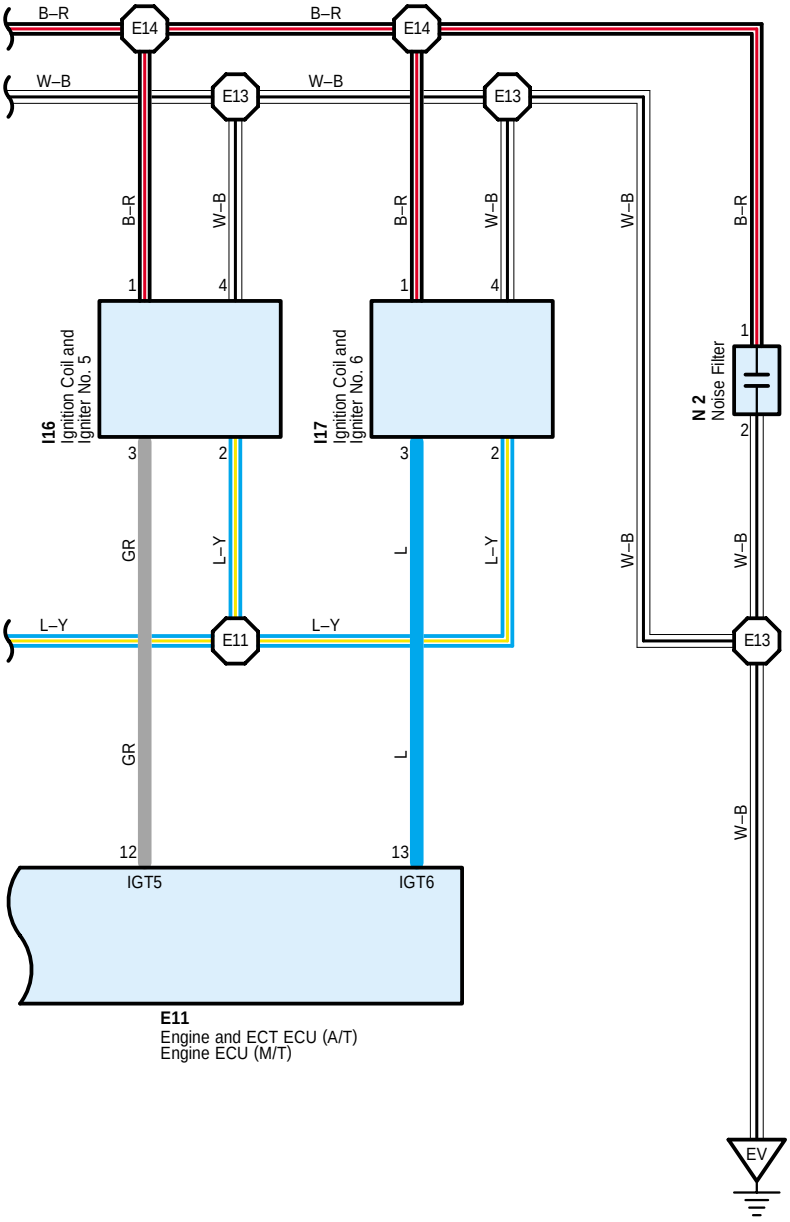
B–R
E14
B–R
E14
W–B
E13
W–B
E13
B–R
W–B
B–R
W–B
W–B
B–R
1
4
1
4
1
I16
Ignition Coil and
Igniter No. 5
I17
Ignition Coil and
Igniter No. 6
N 2
Noise Filter
2
3
2
3
2
GR
L–Y
L
L–Y
W–B
W–B
L–Y
E11
L–Y
E13
GR
L
W–B
12
13
IGT5
IGT6
E11
Engine and ECT ECU (A/T)
Engine ECU (M/T)
EV

Service Hints

I14 Ignition SW

7–6 : Closed with the ignition SW at ON or ST position

: Parts Location

Code	See Page	Code	See Page	Code	See Page
E11	49 (LHD)	I3	39 (*1)	I16	39 (*1)
	69 (RHD)		59 (*10)		59 (*10)
I1	39 (*1)	I4	39 (*1)	I17	39 (*1)
	59 (*10)		59 (*10)		59 (*10)
I2	39 (*1)	I14	50 (LHD)	N2	39 (*1)
	59 (*10)		70 (RHD)		59 (*10)

: Relay Blocks

Code	See Page	Relay Blocks (Relay Block Location)
2	23	Engine Room R/B (Engine Compartment Left)

: Connector Joining Wire Harness and Wire Harness

Code	See Page	Joining Wire Harness and Wire Harness (Connector Location)
IC4	112 (RHD)	Instrument Panel Wire and Engine Room Main Wire (Left Kick Panel)
IL3	92 (LHD)	Engine Wire and Instrument Panel Wire (Right Side of the Blower Unit)
	116 (RHD)	Engine Wire and Instrument Panel Wire (Left Side of the Blower Unit)
IM4	92 (LHD)	Instrument Panel Wire and Engine Room Main Wire (Right Kick Panel)

: Ground Points

Code	See Page	Ground Points Location
EV	78 (*1)	Rear Side of Left Bank Cylinder Block
	102 (*10)	

: Splice Points

Code	See Page	Wire Harness with Splice Points	Code	See Page	Wire Harness with Splice Points
E11	78 (*1)	Engine Wire	E13	102 (*10)	Engine Wire
	102 (*10)		E14	78 (*1)	
E13	78 (*1)			102 (*10)	

* 1 : LHD 1GR-FE * 2 : LHD 3RZ-FE * 3 : LHD 1KD-FTV * 4 : LHD 1KZ-TE * 5 : LHD 5L-E * 6 : LHD 5-Door * 7 : LHD 3-Door
* 8 : LHD 8Way Power Seat * 9 : LHD Except 8Way Power Seat * 10 : RHD 1GR-FE * 11 : RHD 3RZ-FE * 12 : RHD 1KD-FTV
* 13 : RHD 1KZ-TE * 14 : RHD 5L-E * 15 : RHD 5-Door * 16 : RHD 3-Door * 17 : RHD 8Way Power Seat
* 18 : RHD Except 8Way Power Seat

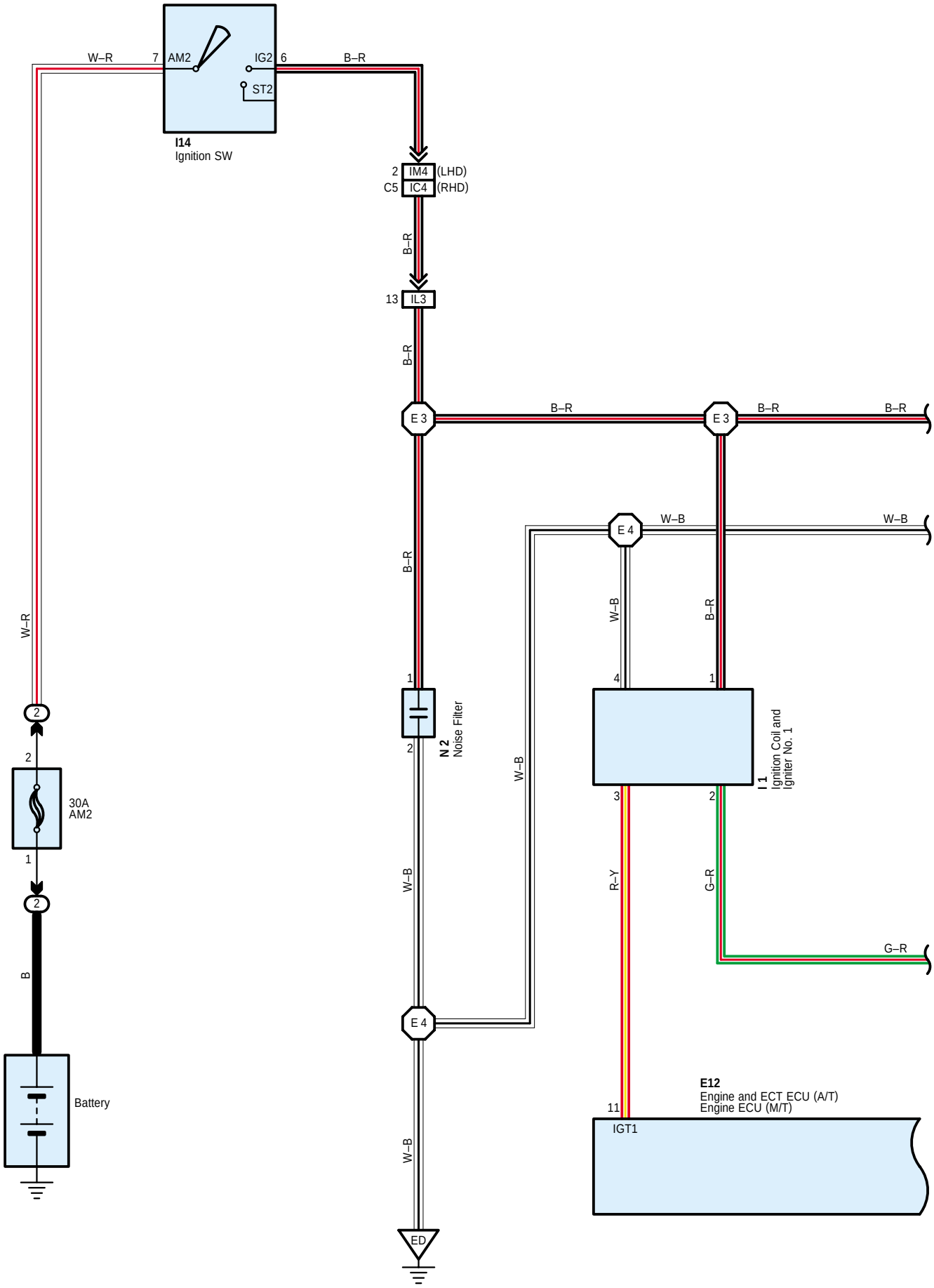
W–R
7
AM2
IG2
6
B–R
ST2
I14
Ignition SW
2
IM4
(LHD)
C5
IC4
(RHD)
B–R
13
IL3
B–R
E 3
B–R
E 3
B–R
B–R
E 4
W–B
W–B
B–R
W–B
B–R
W–R
1
4
1
2
N 2
Noise Filter
W–B
I 1
Ignition Coil and
Igniter No. 1
2
30A
AM2
1
3
2
W–B
R–Y
G–R
G–R
2
B
E 4
Battery
E12
Engine and ECT ECU (A/T)
Engine ECU (M/T)
11
IGT1
W–B
ED

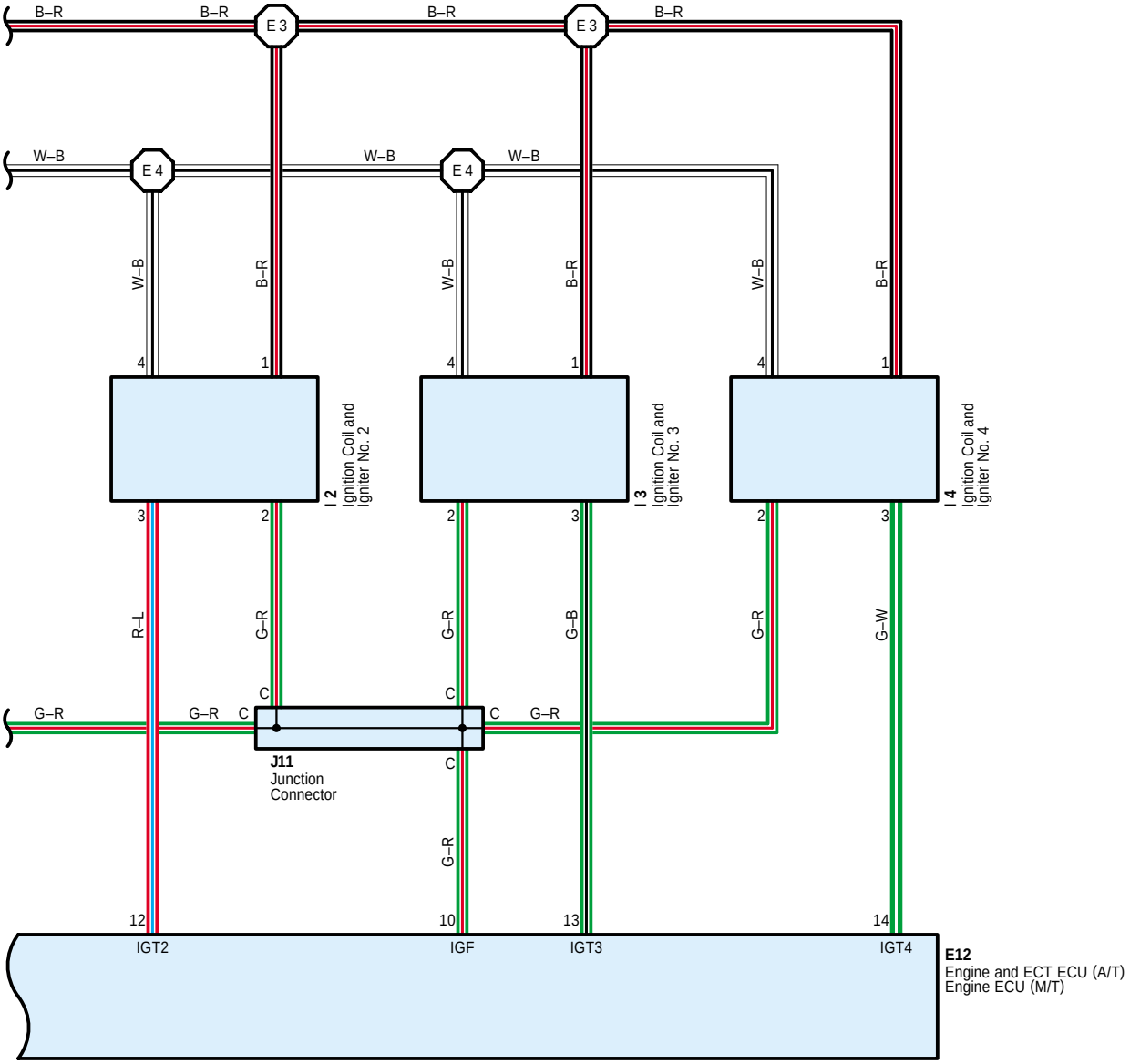
B–R
B–R
E 3
B–R
E 3
B–R
W–B
E 4
W–B
E 4
W–B
W–B
B–R
W–B
B–R
W–B
B–R
4
1
4
1
4
1
I 2
Ignition Coil and
Igniter No. 2
I 3
Ignition Coil and
Igniter No. 3
I 4
Ignition Coil and
Igniter No. 4
3
2
2
3
2
3
R–L
G–R
G–R
G–B
G–R
G–W
C
C
G–R
G–R
C
C
C
G–R
J11
Junction
Connector
C
G–R
12
10
13
14
IGT2
IGF
IGT3
IGT4
E12
Engine and ECT ECU (A/T)
Engine ECU (M/T)

Service Hints

I1, I2, I3, I4 Ignition Coil and Igniter No.1, No.2, No.3, No.4
1-Ground : Approx. 12 volts with the ignition SW at ON position
4-Ground : Always continuity

: Parts Location

Code	See Page	Code	See Page	Code	See Page
E12	49 (LHD)	I3	41 (*2)	J11	50 (LHD)
	69 (RHD)		61 (*11)		70 (RHD)
I1	41 (*2)	I4	41 (*2)	N2	41 (*2)
	61 (*11)		61 (*11)		61 (*11)
I2	41 (*2)	I14	50 (LHD)		
	61 (*11)		70 (RHD)		

: Relay Blocks

Code	See Page	Relay Blocks (Relay Block Location)
2	23	Engine Room R/B (Engine Compartment Left)

: Connector Joining Wire Harness and Wire Harness

Code	See Page	Joining Wire Harness and Wire Harness (Connector Location)
IC4	112 (RHD)	Instrument Panel Wire and Engine Room Main Wire (Left Kick Panel)
IL3	92 (LHD)	Engine Wire and Instrument Panel Wire (Right Side of the Blower Unit)
	116 (RHD)	Engine Wire and Instrument Panel Wire (Left Side of the Blower Unit)
IM4	92 (LHD)	Instrument Panel Wire and Engine Room Main Wire (Right Kick Panel)

: Ground Points

Code	See Page	Ground Points Location
ED	80 (*2)	Ignition Coil Bracket
	104 (*11)	

: Splice Points

Code	See Page	Wire Harness with Splice Points	Code	See Page	Wire Harness with Splice Points
E3	80 (*2)	Engine Wire	E4	80 (*2)	Engine Wire
	104 (*11)			104 (*11)	

* 1 : LHD 1GR-FE * 2 : LHD 3RZ-FE * 3 : LHD 1KD-FTV * 4 : LHD 1KZ-TE * 5 : LHD 5L-E * 6 : LHD 5-Door * 7 : LHD 3-Door
* 8 : LHD 8Way Power Seat * 9 : LHD Except 8Way Power Seat * 10 : RHD 1GR-FE * 11 : RHD 3RZ-FE * 12 : RHD 1KD-FTV
* 13 : RHD 1KZ-TE * 14 : RHD 5L-E * 15 : RHD 5-Door * 16 : RHD 3-Door * 17 : RHD 8Way Power Seat
* 18 : RHD Except 8Way Power Seat

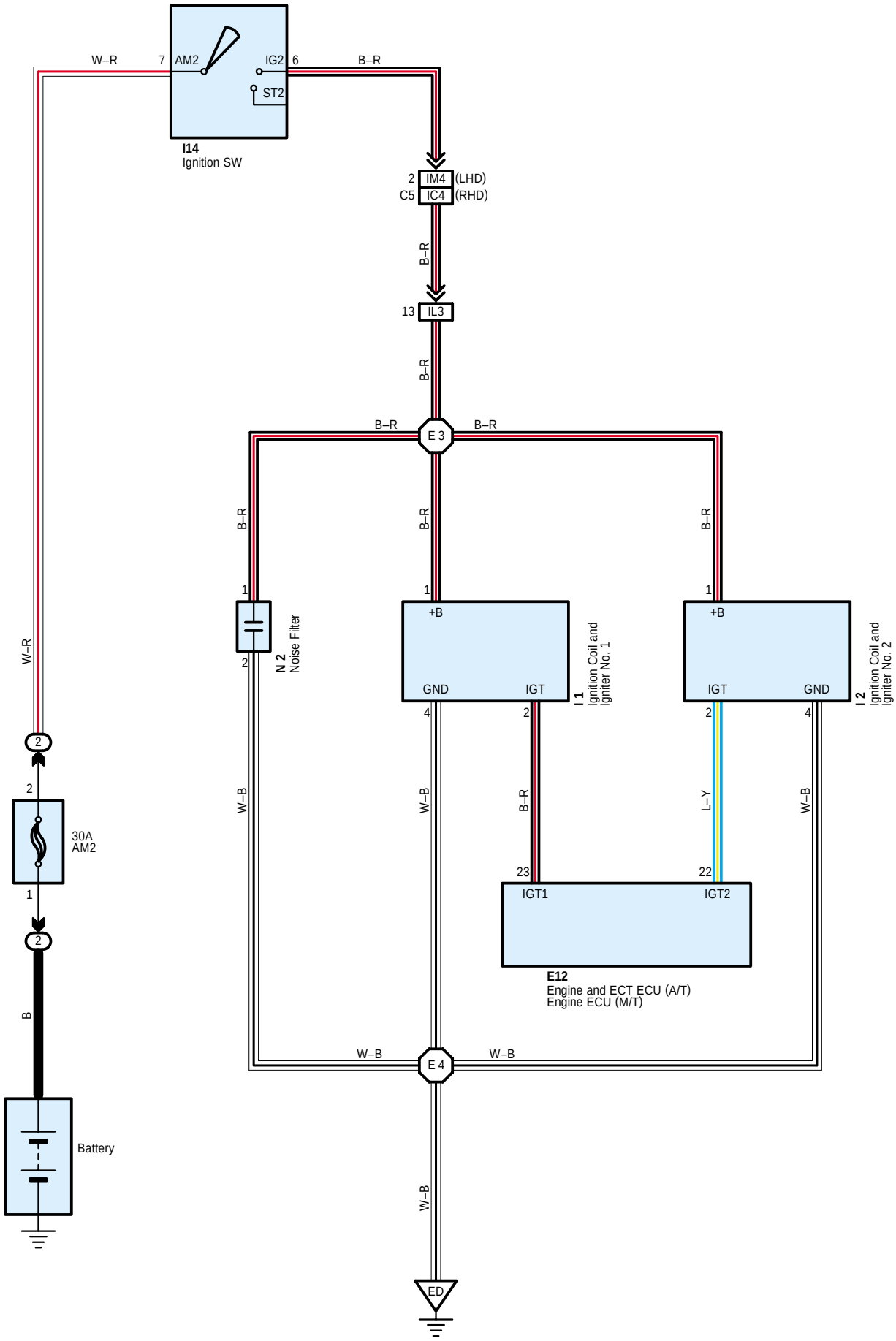
W–R
7
AM2
IG2
6
B–R
ST2
I14
Ignition SW
2
IM4
(LHD)
C5
IC4
(RHD)
B–R
13
IL3
B–R
B–R
E 3
B–R
B–R
B–R
B–R
1
1
1
N 2
Noise Filter
2
+B
GND
IGT
I 1
Ignition Coil and
Igniter No. 1
+B
IGT
GND
I 2
Ignition Coil and
Igniter No. 2
4
2
2
4
W–R
2
2
30A
AM2
1
2
B
W–B
W–B
B–R
L–Y
W–B
23
22
IGT1
IGT2
E12
Engine and ECT ECU (A/T)
Engine ECU (M/T)
W–B
E 4
W–B
Battery
W–B
ED

Service Hints

I1, I2 Ignition Coil and Igniter No.1, No.2

1–Ground : Approx. 12 volts with the ignition SW at ON position
4–Ground : Always continuity

: Parts Location

Code	See Page	Code	See Page	Code	See Page
E12	49 (LHD)	I2	41 (*2)	N2	41 (*2)
	69 (RHD)		61 (*11)		61 (*11)
I1	41 (*2)	I14	50 (LHD)		
	61 (*11)		70 (RHD)		

: Relay Blocks

Code	See Page	Relay Blocks (Relay Block Location)
2	23	Engine Room R/B (Engine Compartment Left)

: Connector Joining Wire Harness and Wire Harness

Code	See Page	Joining Wire Harness and Wire Harness (Connector Location)
IC4	88 (LHD)	Instrument Panel Wire and Engine Room Main Wire (Left Kick Panel)
	112 (RHD)	
IL3	92 (LHD)	Engine Wire and Instrument Panel Wire (Right Side of the Blower Unit)
	116 (RHD)	Engine Wire and Instrument Panel Wire (Left Side of the Blower Unit)
IM4	92 (LHD)	Instrument Panel Wire and Engine Room Main Wire (Right Kick Panel)
	116 (RHD)	

: Ground Points

Code	See Page	Ground Points Location
ED	80 (*2)	Ignition Coil Bracket
	104 (*11)	

: Splice Points

Code	See Page	Wire Harness with Splice Points	Code	See Page	Wire Harness with Splice Points
E3	80 (*2)	Engine Wire	E4	80 (*2)	Engine Wire
	104 (*11)			104 (*11)	

* 1 : LHD 1GR–FE * 2 : LHD 3RZ–FE * 3 : LHD 1KD–FTV * 4 : LHD 1KZ–TE * 5 : LHD 5L–E * 6 : LHD 5–Door * 7 : LHD 3–Door
* 8 : LHD 8Way Power Seat * 9 : LHD Except 8Way Power Seat * 10 : RHD 1GR–FE * 11 : RHD 3RZ–FE * 12 : RHD 1KD–FTV
* 13 : RHD 1KZ–TE * 14 : RHD 5L–E * 15 : RHD 5–Door * 16 : RHD 3–Door * 17 : RHD 8Way Power Seat
* 18 : RHD Except 8Way Power Seat

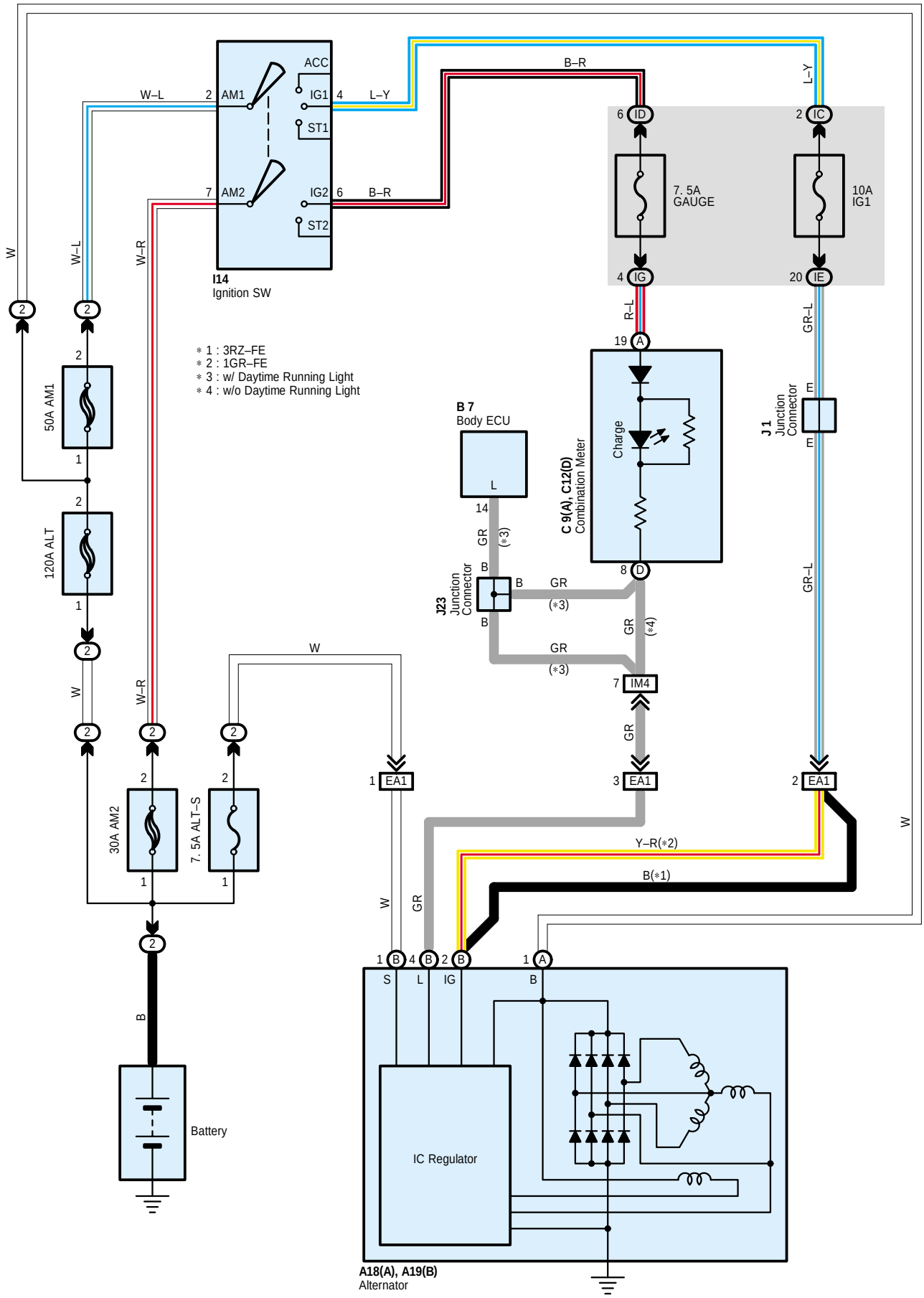
ACC
IG1
ST1
AM1
AM2
IG2
ST2
I14
Ignition SW
W–L
L–Y
B–R
W
W–R
R–L
GR–L
GR
B
Y–R(∗2)
B(∗1)
∗ 1 : 3RZ–FE
∗ 2 : 1GR–FE
∗ 3 : w/ Daytime Running Light
∗ 4 : w/o Daytime Running Light
50A AM1
120A ALT
30A AM2
7. 5A ALT–S
7. 5A GAUGE
10A IG1
ID
IC
IG
IE
B 7
Body ECU
C 9(A), C12(D)
Combination Meter
Charge
J 1
Junction Connector
J23
Junction Connector
IM4
EA1
Battery
IC Regulator
A18(A), A19(B)
Alternator

Service Hints

A19 (B) Alternator

(B) 3-Ground : 13.9-15.1 volts with the engine running at 2000 rpm and 25˚C (77˚F)
13.5-14.3 volts with the engine running at 5000 rpm and 115˚C (239˚F)

(B) 1-Ground : 0-4 volts with the ignition SW at ON position and the engine not running

: Parts Location

Code		See Page	Code		See Page	Code	See Page
A18	A	38 (*1)	B7		48 (LHD)	J1	39 (*1)
		40 (*2)			68 (RHD)		41 (*2)
		58 (*10)	C9	A	49 (LHD)		59 (*10)
		60 (*11)			69 (RHD)		61 (*11)
A19	B	38 (*1)	C12	D	49 (LHD)	J23	50 (LHD)
		40 (*2)			69 (RHD)		70 (RHD)
		58 (*10)	I14		50 (LHD)		
		60 (*11)			70 (RHD)		

: Relay Blocks

Code	See Page	Relay Blocks (Relay Block Location)
2	23	Engine Room R/B (Engine Compartment Left)

: Junction Block and Wire Harness Connector

Code	See Page	Junction Block and Wire Harness (Connector Location)
IC	26 (LHD)	Engine Room Main Wire and Driver Side J/B (Lower Finish Panel)
	28 (RHD)	
ID	26 (LHD)	
	28 (RHD)	
IE	26 (LHD)	
	28 (RHD)	
IG	27 (LHD)	Instrument Panel Wire and Driver Side J/B (Lower Finish Panel)
	29 (RHD)	

: Connector Joining Wire Harness and Wire Harness

Code	See Page	Joining Wire Harness and Wire Harness (Connector Location)
EA1	78 (*1)	Engine No.2 Wire and Engine Room Main Wire (Near the Engine Room R/B)
	80 (*2)	
	102 (*10)	
	104 (*11)	
IM4	92 (LHD)	Instrument Panel Wire and Engine Room Main Wire (Right Kick Panel)
	116 (RHD)	

* 1 : LHD 1GR-FE * 2 : LHD 3RZ-FE * 3 : LHD 1KD-FTV * 4 : LHD 1KZ-TE * 5 : LHD 5L-E * 6 : LHD 5-Door * 7 : LHD 3-Door
* 8 : LHD 8Way Power Seat * 9 : LHD Except 8Way Power Seat * 10 : RHD 1GR-FE * 11 : RHD 3RZ-FE * 12 : RHD 1KD-FTV
* 13 : RHD 1KZ-TE * 14 : RHD 5L-E * 15 : RHD 5-Door * 16 : RHD 3-Door * 17 : RHD 8Way Power Seat
* 18 : RHD Except 8Way Power Seat

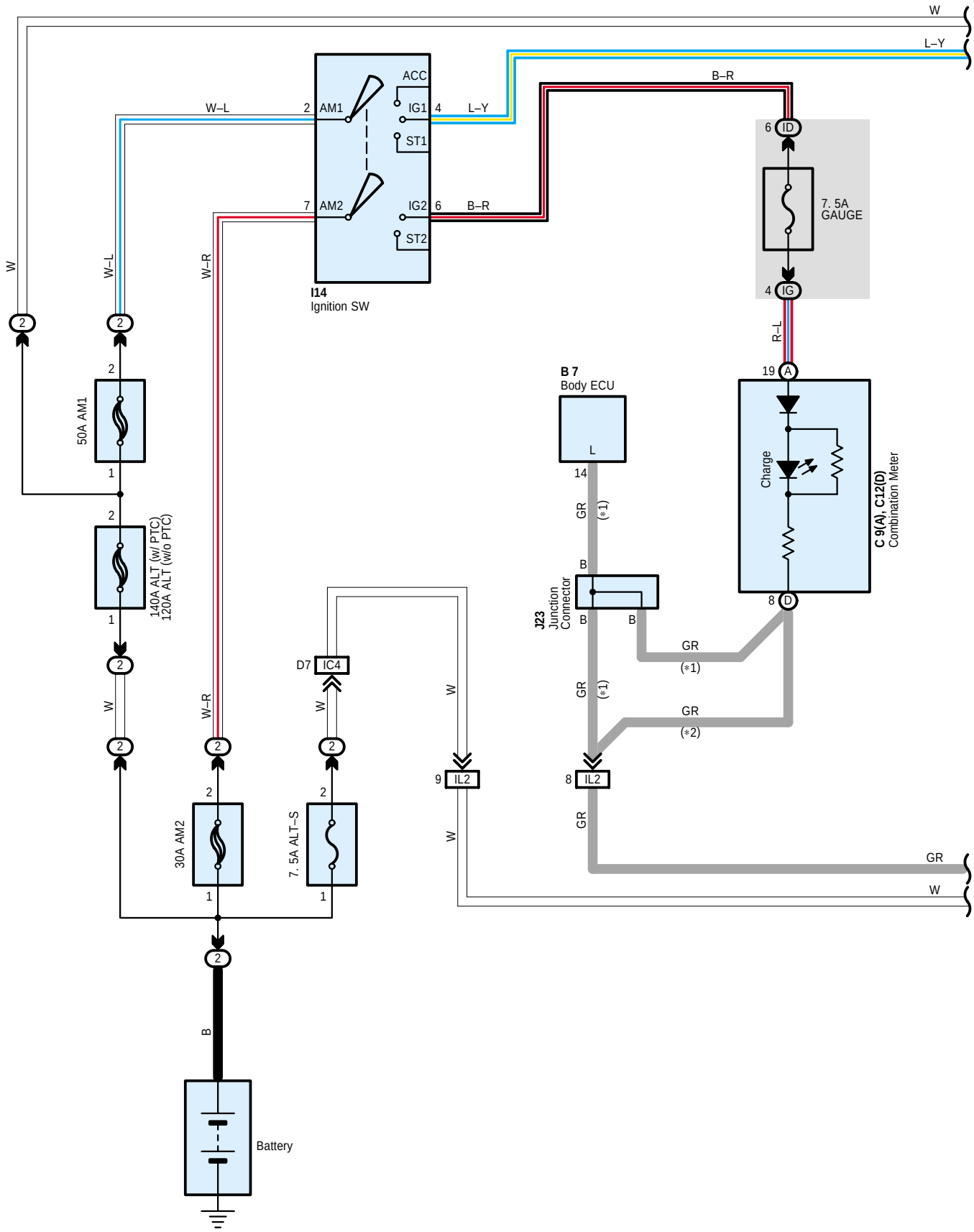
W
L–Y
B–R
W–L
2 AM1
ACC
IG1 4
L–Y
ST1
7 AM2
IG2 6
B–R
ST2
I14
Ignition SW
6 ID
7. 5A
GAUGE
4 IG
R–L
19 A
B 7
Body ECU
L
14
GR
(*1)
B
J23
Junction
Connector
B
B
GR
(*1)
GR
(*2)
8 D
Charge
C 9(A), C12(D)
Combination Meter
W
W–L
W–R
50A AM1
140A ALT (w/ PTC)
120A ALT (w/o PTC)
D7 IC4
9 IL2
8 IL2
30A AM2
7. 5A ALT–S
B
Battery

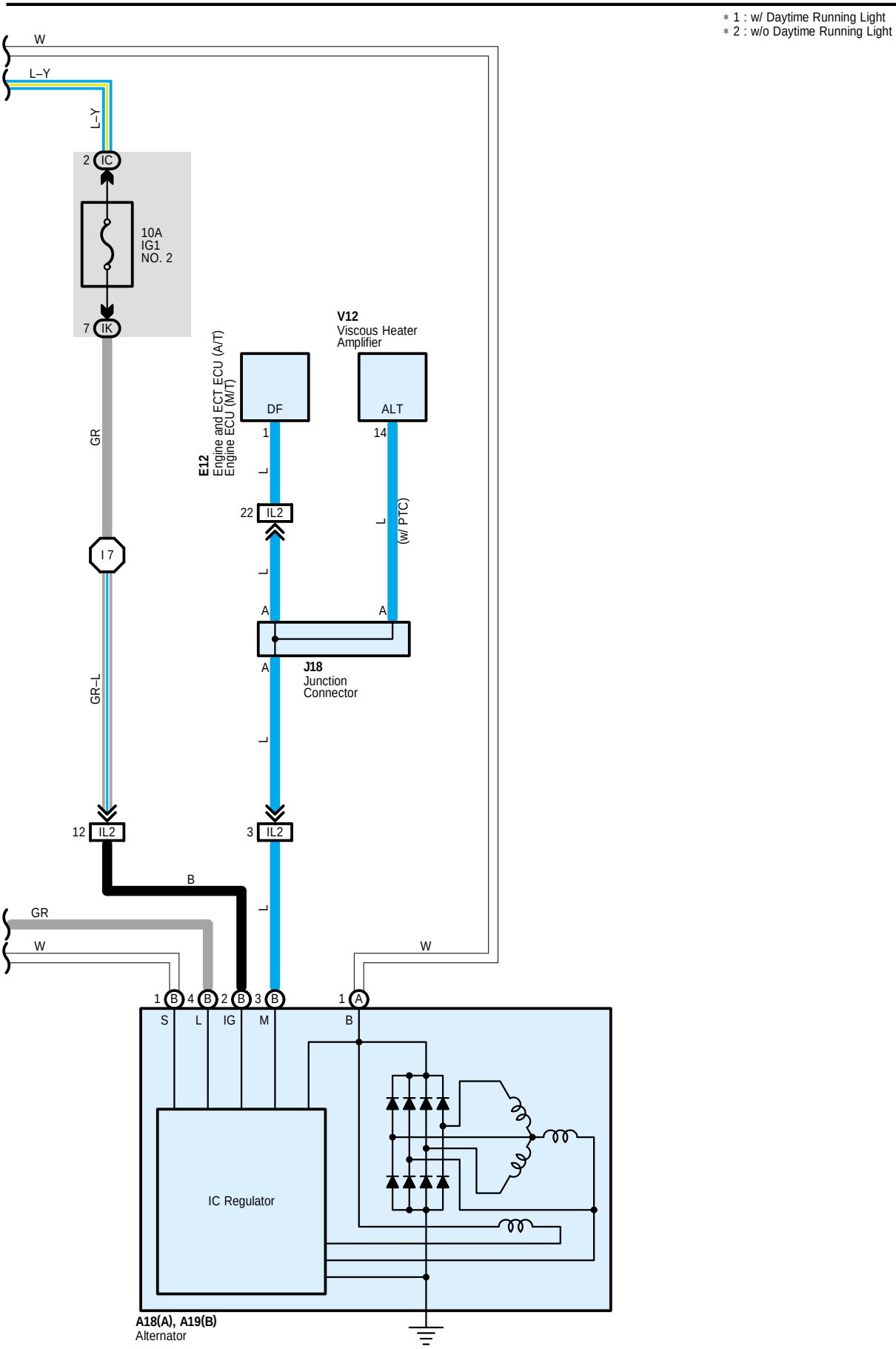
∗ 1 : w/ Daytime Running Light
∗ 2 : w/o Daytime Running Light
W
L–Y
L–Y
2 IC
10A
IG1
NO. 2
7 IK
GR
I 7
GR–L
12 IL2
B
GR
W
E12
Engine and ECT ECU (A/T)
Engine ECU (M/T)
DF
1
L
22 IL2
L
A
A
J18
Junction
Connector
L
3 IL2
V12
Viscous Heater
Amplifier
ALT
14
L
(w/ PTC)
W
1 B 4 B 2 B 3 B
S L IG M
1 A
B
IC Regulator
A18(A), A19(B)
Alternator

Service Hints

A19 (B) Alternator

(B) 3-Ground : 13.9-15.1 volts with the engine running at 2000 rpm and 25˚C (77˚F)
13.5-14.3 volts with the engine running at 5000 rpm and 115˚C (239˚F)

(B) 1-Ground : 0-4 volts with the ignition SW at ON position and the engine not running

: Parts Location

Code		See Page	Code		See Page	Code	See Page
A18	A	42 (*3)	C9	A	69 (RHD)	J18	50 (LHD)
		62 (*12)	C12	D	49 (LHD)		70 (RHD)
A19	B	42 (*3)			69 (RHD)	J23	50 (LHD)
		62 (*12)	E12		49 (LHD)		70 (RHD)
B7		48 (LHD)			69 (RHD)	V12	51 (LHD)
		68 (RHD)	I14		50 (LHD)		71 (RHD)
C9	A	49 (LHD)			70 (RHD)		

: Relay Blocks

Code	See Page	Relay Blocks (Relay Block Location)
2	23	Engine Room R/B (Engine Compartment Left)

: Junction Block and Wire Harness Connector

Code	See Page	Junction Block and Wire Harness (Connector Location)
IC	26 (LHD)	Engine Room Main Wire and Driver Side J/B (Lower Finish Panel)
	28 (RHD)	
ID	26 (LHD)	
	28 (RHD)	
IG	27 (LHD)	Instrument Panel Wire and Driver Side J/B (Lower Finish Panel)
	29 (RHD)	
IK	27 (LHD)	
	29 (RHD)	

: Connector Joining Wire Harness and Wire Harness

Code	See Page	Joining Wire Harness and Wire Harness (Connector Location)
IC4	88 (LHD)	Instrument Panel Wire and Engine Room Main Wire (Left Kick Panel)
	112 (RHD)	
IL2	92 (LHD)	Engine Wire and Instrument Panel Wire (Right Side of the Blower Unit)
	116 (RHD)	Engine Wire and Instrument Panel Wire (Left Side of the Blower Unit)

: Splice Points

Code	See Page	Wire Harness with Splice Points	Code	See Page	Wire Harness with Splice Points
I7	90 (LHD)	Instrument Panel Wire	I7	114 (RHD)	Instrument Panel Wire

* 1 : LHD 1GR-FE * 2 : LHD 3RZ-FE * 3 : LHD 1KD-FTV * 4 : LHD 1KZ-TE * 5 : LHD 5L-E * 6 : LHD 5-Door * 7 : LHD 3-Door
* 8 : LHD 8Way Power Seat * 9 : LHD Except 8Way Power Seat * 10 : RHD 1GR-FE * 11 : RHD 3RZ-FE * 12 : RHD 1KD-FTV
* 13 : RHD 1KZ-TE * 14 : RHD 5L-E * 15 : RHD 5-Door * 16 : RHD 3-Door * 17 : RHD 8Way Power Seat
* 18 : RHD Except 8Way Power Seat

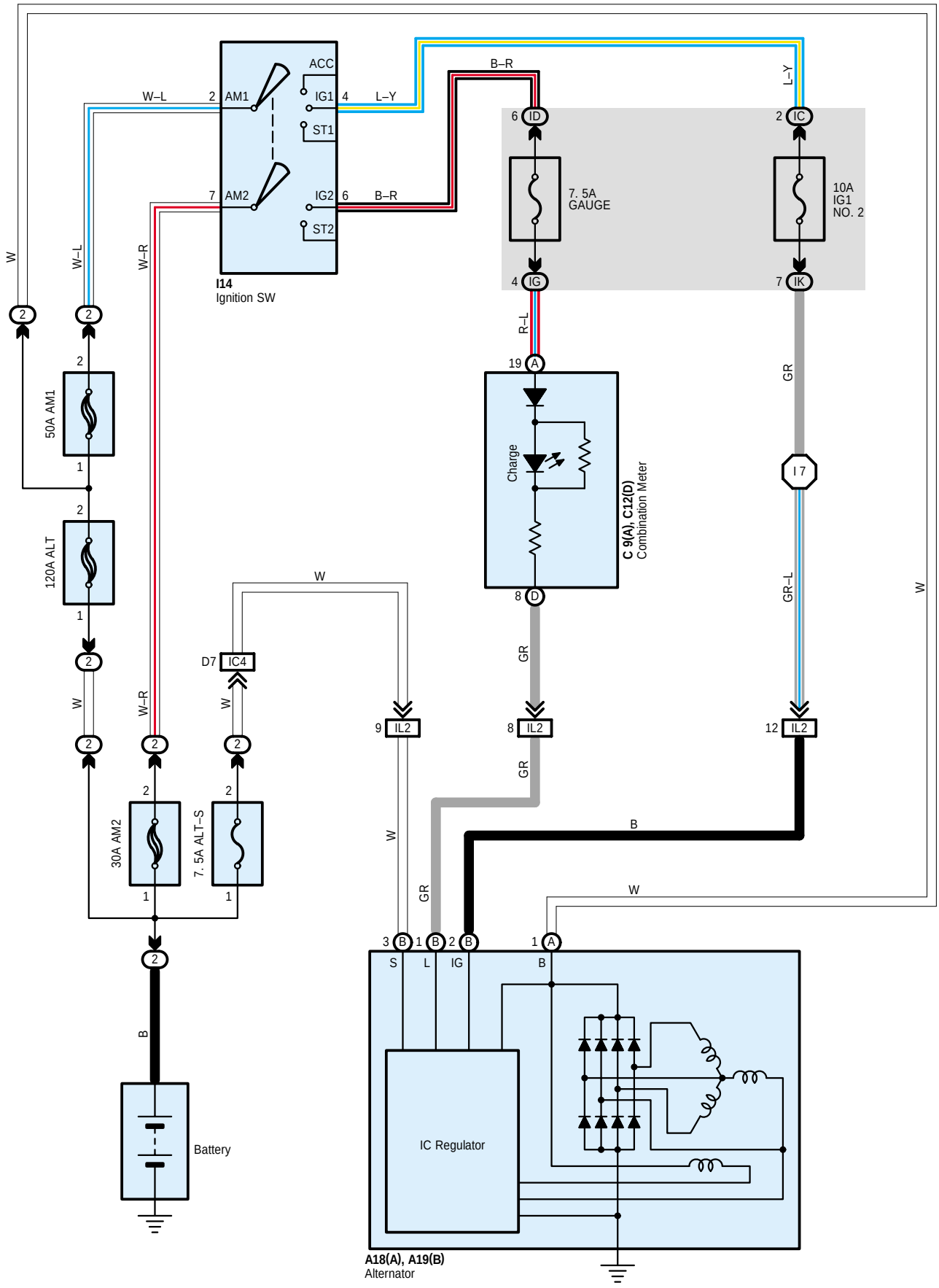
ACC
IG1
ST1
AM1
AM2
IG2
ST2
I14
Ignition SW
W–L
L–Y
B–R
W
W–R
R–L
GR
GR–L
B
7. 5A
GAUGE
10A
IG1
NO. 2
ID
IC
IG
IK
50A AM1
120A ALT
30A AM2
7. 5A ALT–S
D7
IC4
IL2
I 7
Charge
C 9(A), C12(D)
Combination Meter
S
L
IG
Battery
IC Regulator
A18(A), A19(B)
Alternator

Service Hints

A19 (B) Alternator

(B) 3–Ground : 13.9–15.1 volts with the engine running at 2000 rpm and 25˚C (77˚F)
13.5–14.3 volts with the engine running at 5000 rpm and 115˚C (239˚F)

(B) 1–Ground : 0–4 volts with the ignition SW at ON position and the engine not running

: Parts Location

Code		See Page	Code		See Page	Code	See Page
A18	A	44 (*4)	C9	A	49 (LHD)	I14	50 (LHD)
		64 (*13)			69 (RHD)		70 (RHD)
A19	B	44 (*4)	C12	D	49 (LHD)		
		64 (*13)			69 (RHD)		

: Relay Blocks

Code	See Page	Relay Blocks (Relay Block Location)
2	23	Engine Room R/B (Engine Compartment Left)

: Junction Block and Wire Harness Connector

Code	See Page	Junction Block and Wire Harness (Connector Location)
IC	26 (LHD)	Engine Room Main Wire and Driver Side J/B (Lower Finish Panel)
	28 (RHD)	
ID	26 (LHD)	
	28 (RHD)	
IG	27 (LHD)	Instrument Panel Wire and Driver Side J/B (Lower Finish Panel)
	29 (RHD)	
IK	27 (LHD)	
	29 (RHD)	

: Connector Joining Wire Harness and Wire Harness

Code	See Page	Joining Wire Harness and Wire Harness (Connector Location)
IC4	88 (LHD)	Instrument Panel Wire and Engine Room Main Wire (Left Kick Panel)
	112 (RHD)	
IL2	92 (LHD)	Engine Wire and Instrument Panel Wire (Right Side of the Blower Unit)
	116 (RHD)	Engine Wire and Instrument Panel Wire (Left Side of the Blower Unit)

: Splice Points

Code	See Page	Wire Harness with Splice Points	Code	See Page	Wire Harness with Splice Points
I7	90 (LHD)	Instrument Panel Wire	I7	114 (RHD)	Instrument Panel Wire

* 1 : LHD 1GR–FE * 2 : LHD 3RZ–FE * 3 : LHD 1KD–FTV * 4 : LHD 1KZ–TE * 5 : LHD 5L–E * 6 : LHD 5–Door * 7 : LHD 3–Door
* 8 : LHD 8Way Power Seat * 9 : LHD Except 8Way Power Seat * 10 : RHD 1GR–FE * 11 : RHD 3RZ–FE * 12 : RHD 1KD–FTV
* 13 : RHD 1KZ–TE * 14 : RHD 5L–E * 15 : RHD 5–Door * 16 : RHD 3–Door * 17 : RHD 8Way Power Seat
* 18 : RHD Except 8Way Power Seat

Fuel Heater

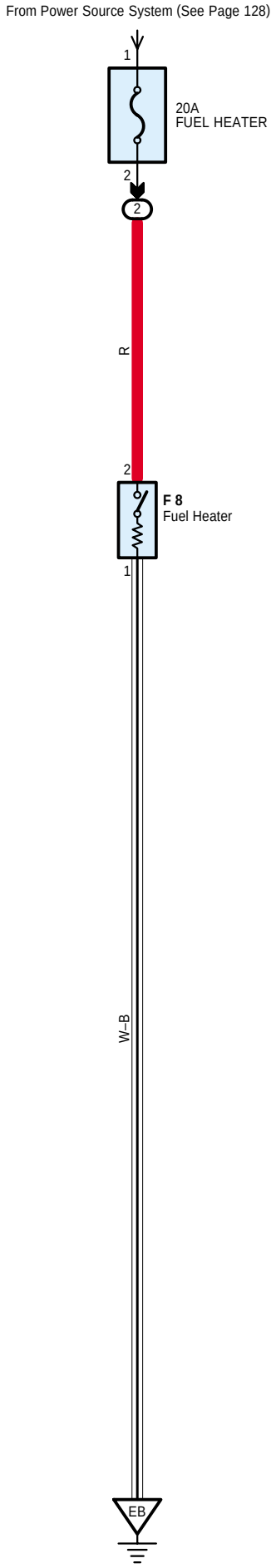
From Power Source System (See Page 128)
1
20A
FUEL HEATER
2
2
R
2
F 8
Fuel Heater
1
W–B
EB

Service Hints

F8 Fuel Heater

2–Ground : Approx. 12 volts with the ignition SW at ON position
1–Ground : Always continuity

: Parts Location

Code	See Page	Code	See Page	Code	See Page
F8	42 (*3)	F8	62 (*12)		

: Relay Blocks

Code	See Page	Relay Blocks (Relay Block Location)
2	23	Engine Room R/B (Engine Compartment Left)

: Ground Points

Code	See Page	Ground Points Location
EB	82 (*3)	Front Left Fender
	106 (*12)	

* 1 : LHD 1GR–FE * 2 : LHD 3RZ–FE * 3 : LHD 1KD–FTV * 4 : LHD 1KZ–TE * 5 : LHD 5L–E * 6 : LHD 5–Door * 7 : LHD 3–Door
* 8 : LHD 8Way Power Seat * 9 : LHD Except 8Way Power Seat * 10 : RHD 1GR–FE * 11 : RHD 3RZ–FE * 12 : RHD 1KD–FTV
* 13 : RHD 1KZ–TE * 14 : RHD 5L–E * 15 : RHD 5–Door * 16 : RHD 3–Door * 17 : RHD 8Way Power Seat
* 18 : RHD Except 8Way Power Seat

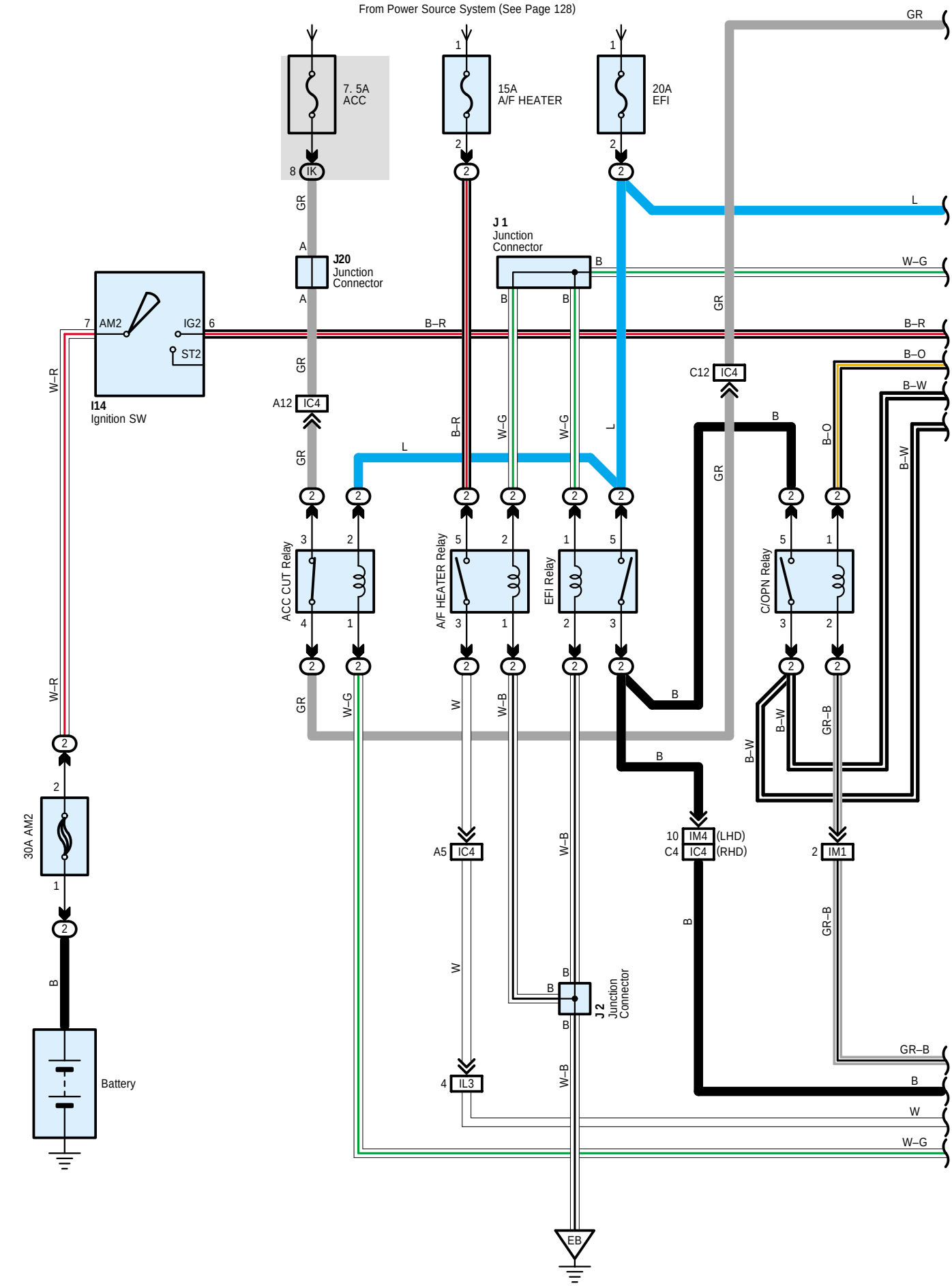
From Power Source System (See Page 128)
7. 5A
ACC
15A
A/F HEATER
20A
EFI
J20
Junction
Connector
J1
Junction
Connector
I14
Ignition SW
AM2
IG2
ST2
ACC CUT Relay
A/F HEATER Relay
EFI Relay
C/OPN Relay
30A AM2
Battery
J2
Junction
Connector
IC4
IM4
IM1
IL3
EB
(LHD)
(RHD)
GR
L
W–G
B–R
B–O
B–W
W–R
B
W
GR–B

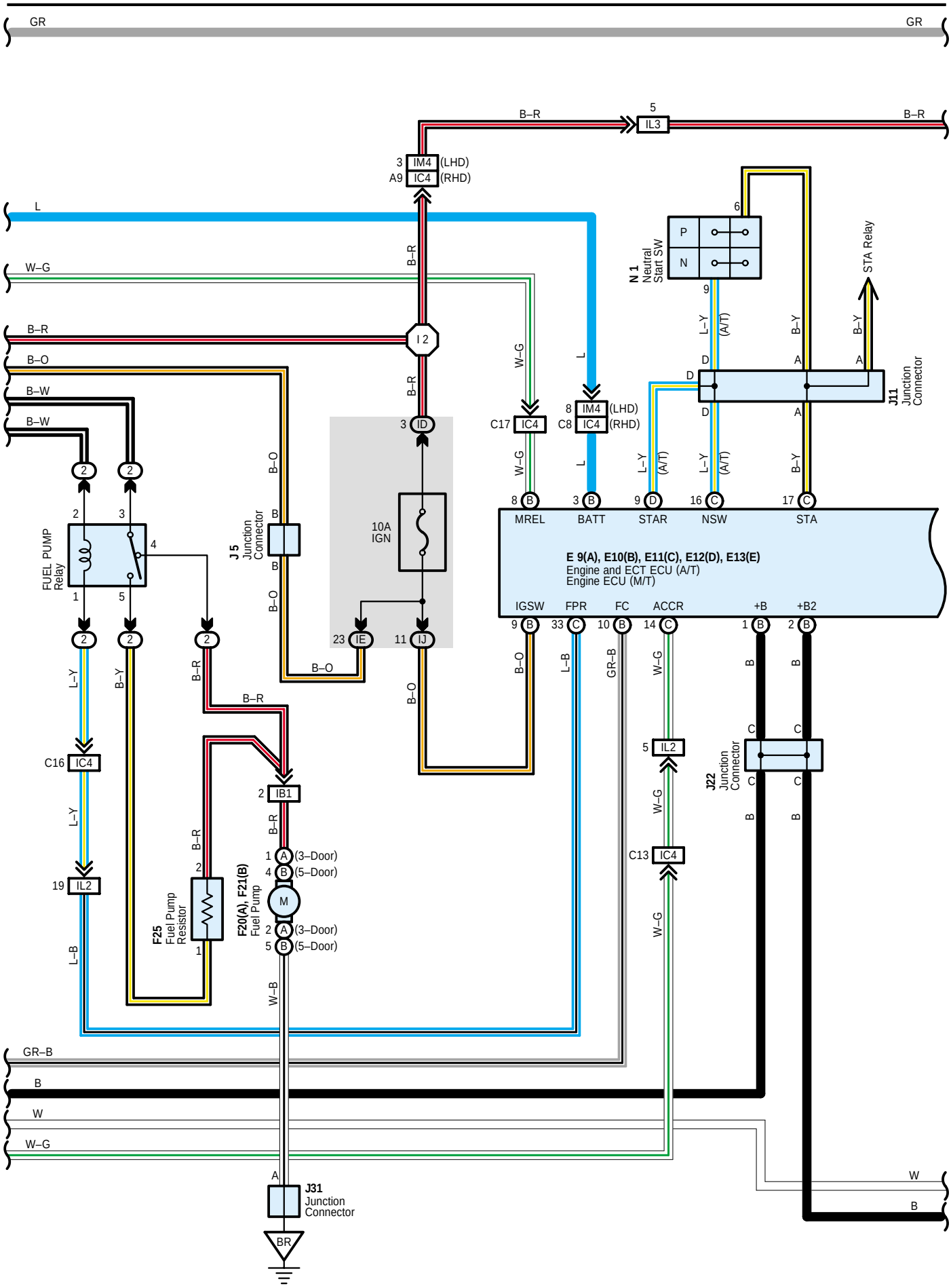
GR
GR
B–R
5
IL3
B–R
3 IM4 (LHD)
A9 IC4 (RHD)
L
W–G
B–R
B–O
B–W
B–W
I 2
B–R
3 ID
W–G
L
8 IM4 (LHD)
C17 IC4
C8 IC4 (RHD)
W–G
L
8 B
3 B
MREL
BATT
6
P
N
N 1
Neutral Start SW
9
L–Y (A/T)
B–Y
STA Relay
B–Y
D
A
A
D
J11 Junction Connector
D
A
L–Y (A/T)
L–Y (A/T)
B–Y
9 D
16 C
17 C
STAR
NSW
STA
E 9(A), E10(B), E11(C), E12(D), E13(E)
Engine and ECT ECU (A/T)
Engine ECU (M/T)
IGSW
FPR
FC
ACCR
+B
+B2
9 B
33 C
10 B
14 C
1 B
2 B
B–O
L–B
GR–B
W–G
B
B
FUEL PUMP Relay
2
3
4
1
5
2
2
2
2
2
B–O
B
B
B–O
J 5 Junction Connector
10A IGN
23 IE
11 IJ
B–O
B–O
L–Y
B–Y
B–R
B–R
C16 IC4
L–Y
19 IL2
L–B
B–R
2
F25 Fuel Pump Resistor
1
B–R
2 IB1
B–R
1 A (3–Door)
4 B (5–Door)
M
F20(A), F21(B) Fuel Pump
2 A (3–Door)
5 B (5–Door)
W–B
5 IL2
W–G
C13 IC4
W–G
C
C
J22 Junction Connector
C
C
B
B
GR–B
B
W
W–G
A
J31 Junction Connector
BR
W
B

Engine Control (1GR-FE)

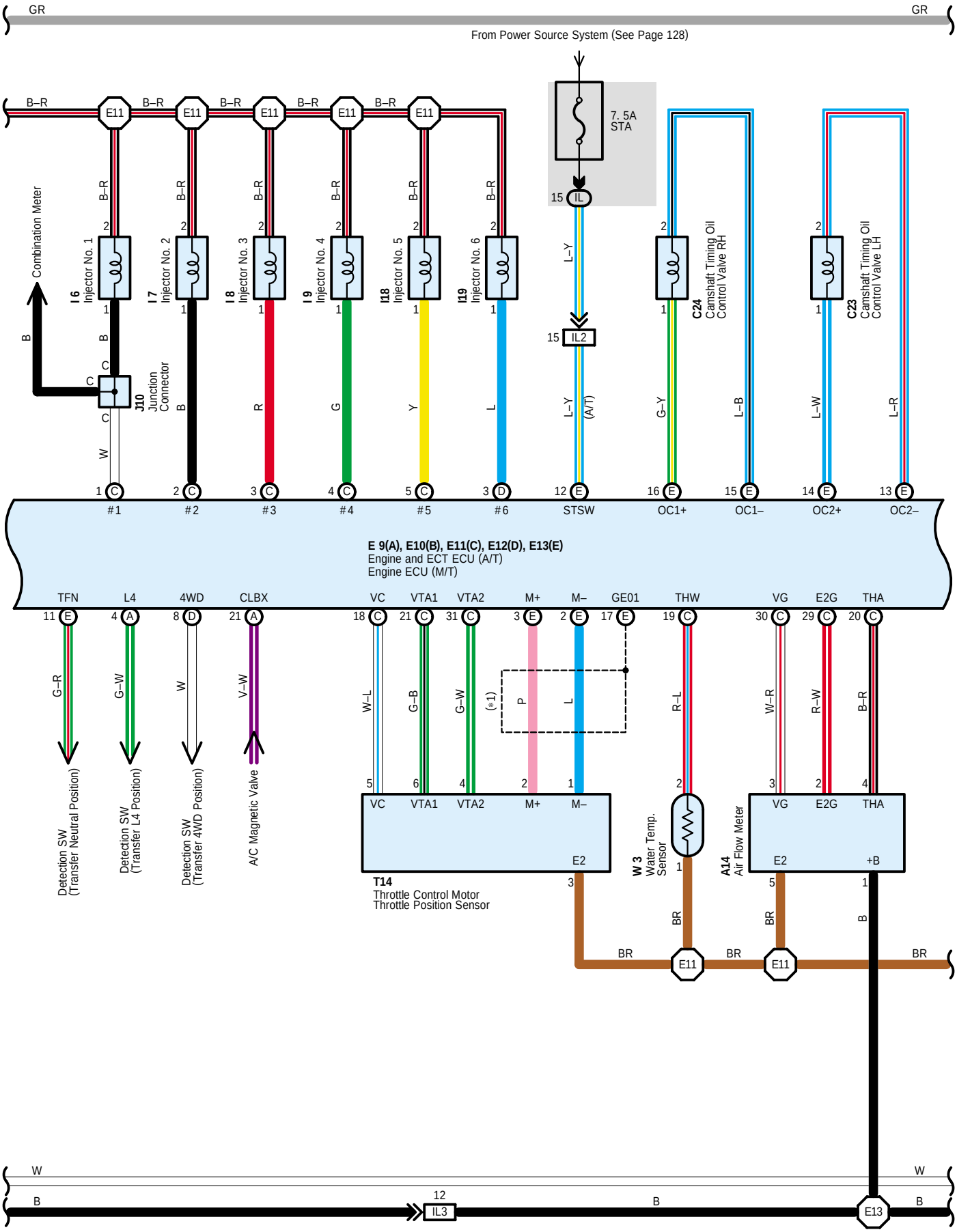

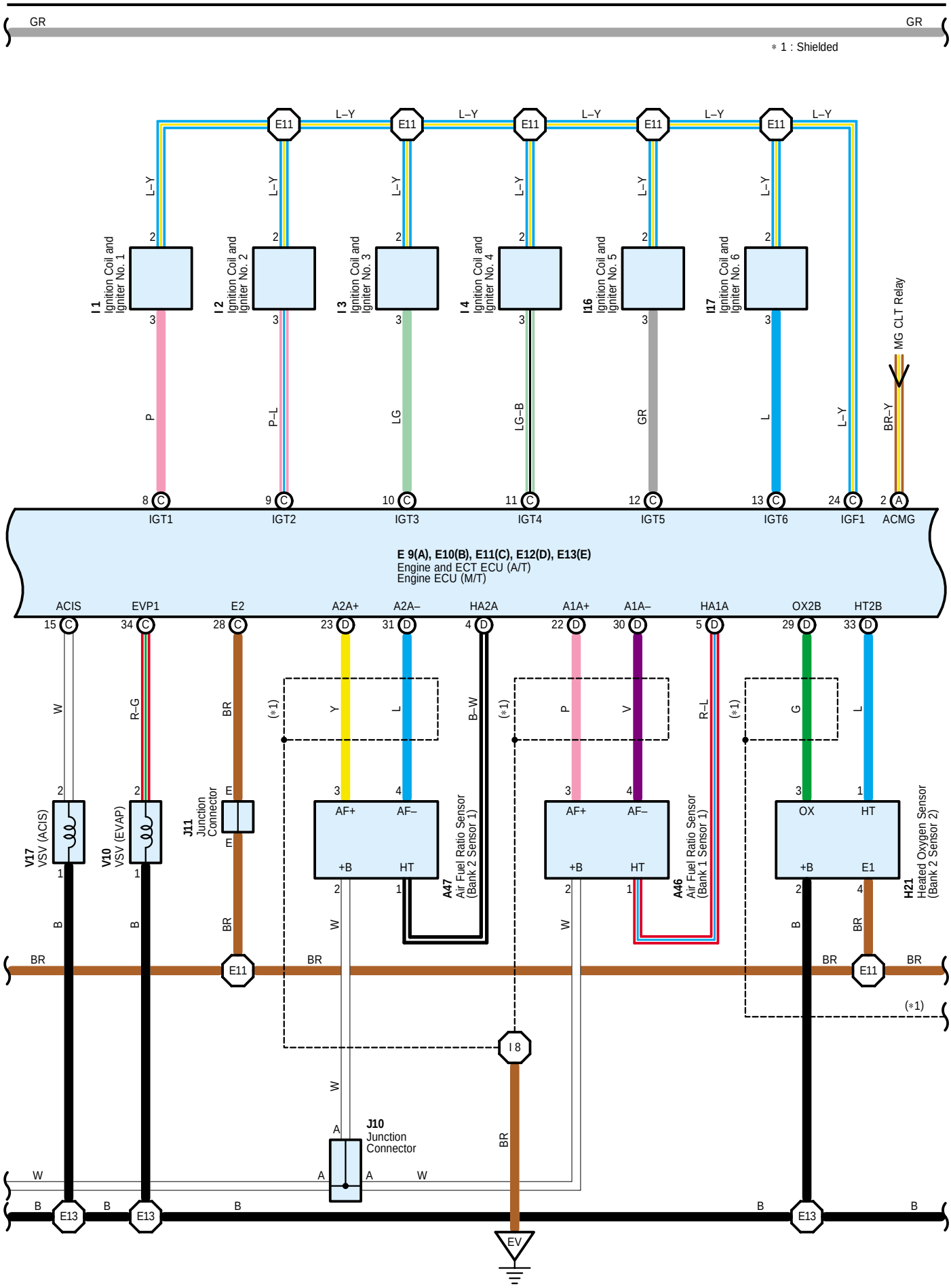
GR
GR
∗1 : Shielded
E11
L–Y
I 1
Ignition Coil and Igniter No. 1
I 2
Ignition Coil and Igniter No. 2
I 3
Ignition Coil and Igniter No. 3
I 4
Ignition Coil and Igniter No. 4
I16
Ignition Coil and Igniter No. 5
I17
Ignition Coil and Igniter No. 6
MG CLT Relay
P
P–L
LG
LG–B
GR
L
L–Y
BR–Y
IGT1
IGT2
IGT3
IGT4
IGT5
IGT6
IGF1
ACMG
E 9(A), E10(B), E11(C), E12(D), E13(E)
Engine and ECT ECU (A/T)
Engine ECU (M/T)
ACIS
EVP1
E2
A2A+
A2A–
HA2A
A1A+
A1A–
HA1A
OX2B
HT2B
W
R–G
BR
Y
L
B–W
P
V
R–L
G
(∗1)
V17
VSV (ACIS)
V10
VSV (EVAP)
J11
Junction Connector
AF+
AF–
+B
HT
A47
Air Fuel Ratio Sensor (Bank 2 Sensor 1)
A46
Air Fuel Ratio Sensor (Bank 1 Sensor 1)
OX
E1
H21
Heated Oxygen Sensor (Bank 2 Sensor 2)
I 8
J10
Junction Connector
B
E13
EV

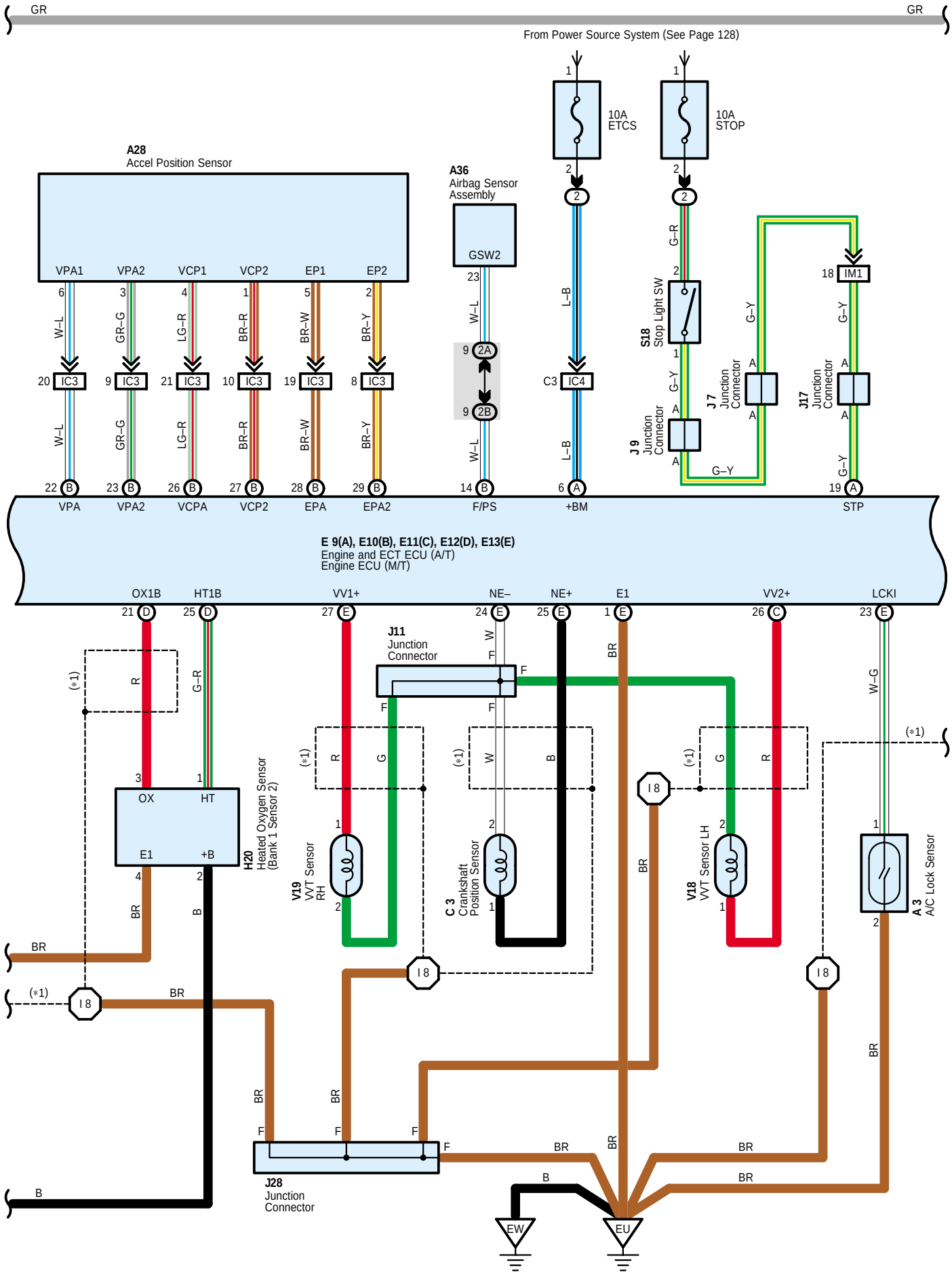
GR
GR
From Power Source System (See Page 128)
10A ETCS
10A STOP
A28 Accel Position Sensor
VPA1 VPA2 VCP1 VCP2 EP1 EP2
A36 Airbag Sensor Assembly
GSW2
IC3
IC4
S18 Stop Light SW
J9 Junction Connector
J7 Junction Connector
J17 Junction Connector
IM1
VPA VPA2 VCPA VCP2 EPA EPA2 F/PS +BM STP
E 9(A), E10(B), E11(C), E12(D), E13(E)
Engine and ECT ECU (A/T)
Engine ECU (M/T)
OX1B HT1B VV1+ NE– NE+ E1 VV2+ LCKI
J11 Junction Connector
H20 Heated Oxygen Sensor (Bank 1 Sensor 2)
OX HT E1 +B
V19 VVT Sensor RH
C 3 Crankshaft Position Sensor
V18 VVT Sensor LH
A 3 A/C Lock Sensor
J28 Junction Connector
EW
EU

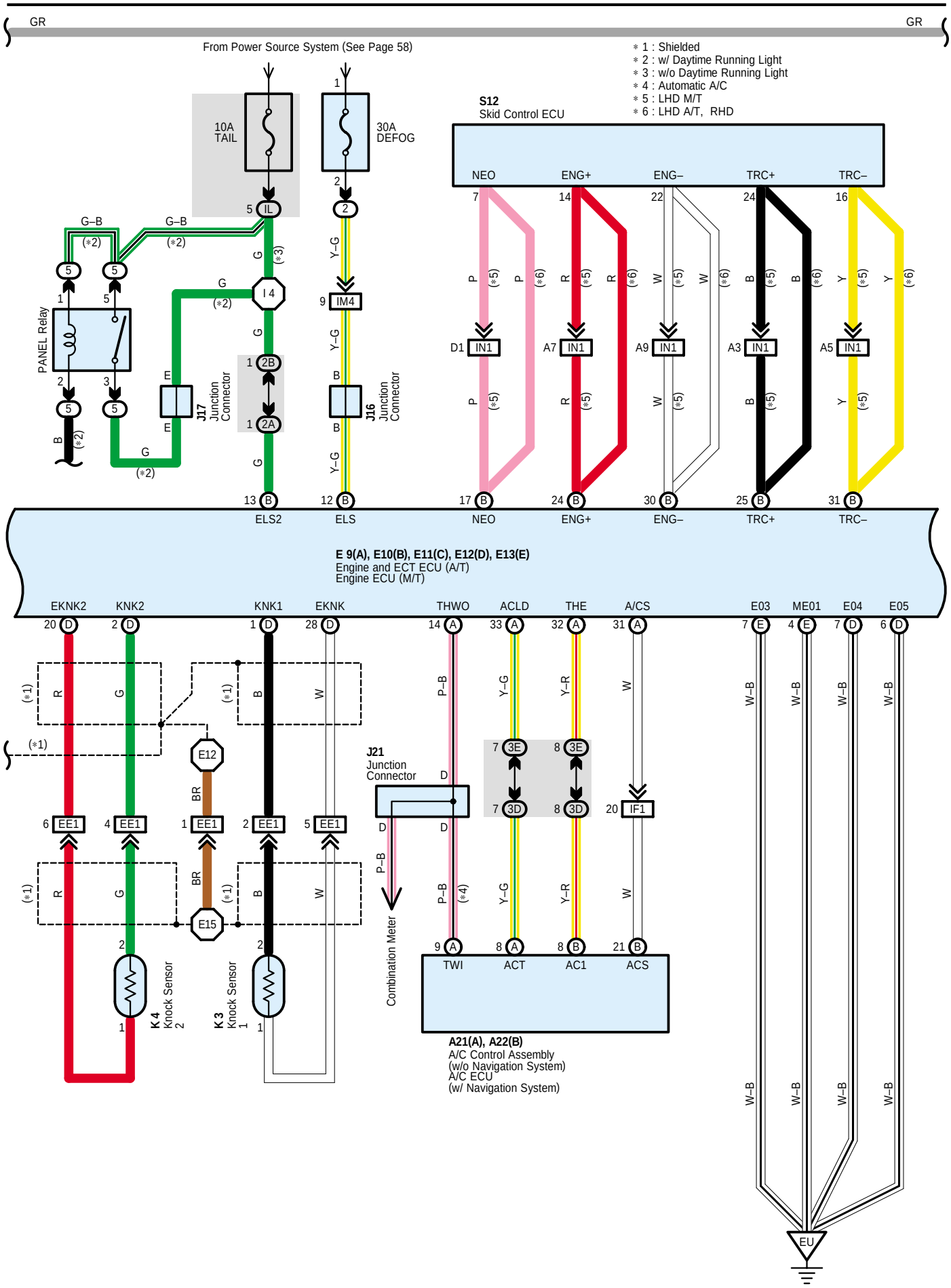
GR
GR
From Power Source System (See Page 58)
* 1 : Shielded
* 2 : w/ Daytime Running Light
* 3 : w/o Daytime Running Light
* 4 : Automatic A/C
* 5 : LHD M/T
* 6 : LHD A/T, RHD
10A TAIL
30A DEFOG
S12
Skid Control ECU
NEO
ENG+
ENG–
TRC+
TRC–
PANEL Relay
J17 Junction Connector
J16 Junction Connector
ELS2
ELS
E 9(A), E10(B), E11(C), E12(D), E13(E)
Engine and ECT ECU (A/T)
Engine ECU (M/T)
EKNK2
KNK2
KNK1
EKNK
THWO
ACLD
THE
A/CS
E03
ME01
E04
E05
J21
Junction Connector
Combination Meter
K 4
Knock Sensor 2
K 3
Knock Sensor 1
TWI
ACT
AC1
ACS
A21(A), A22(B)
A/C Control Assembly
(w/o Navigation System)
A/C ECU
(w/ Navigation System)
EU

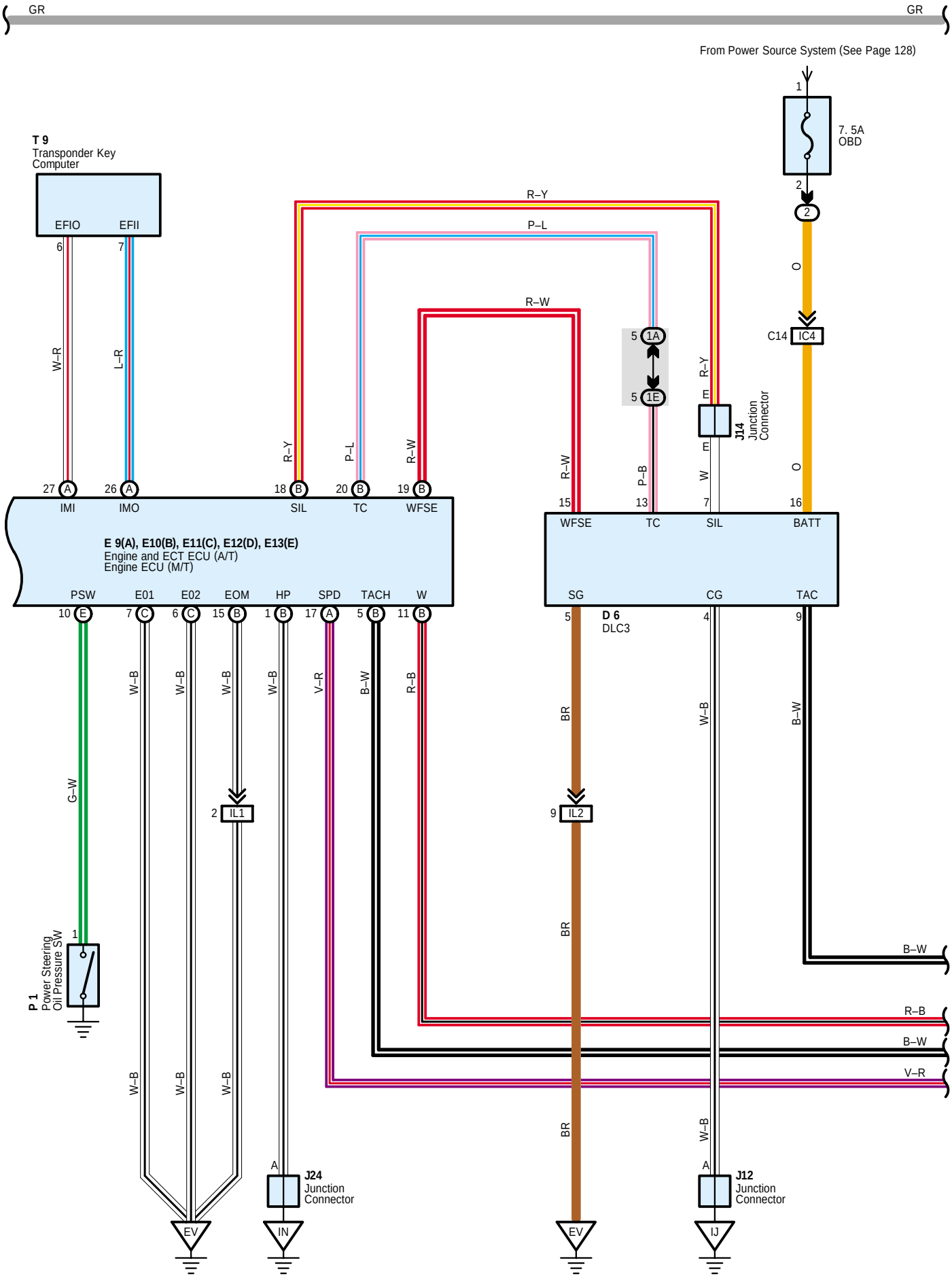
GR
GR
From Power Source System (See Page 128)
1
7. 5A
OBD
2
2
O
C14
IC4
T 9
Transponder Key
Computer
EFIO
EFII
6
7
W–R
L–R
R–Y
P–L
R–W
5
1A
5
1E
R–Y
E
J14
Junction
Connector
E
W
O
R–Y
P–L
R–W
R–W
P–B
27
A
26
A
18
B
20
B
19
B
15
13
7
16
IMI
IMO
SIL
TC
WFSE
WFSE
TC
SIL
BATT
E 9(A), E10(B), E11(C), E12(D), E13(E)
Engine and ECT ECU (A/T)
Engine ECU (M/T)
PSW
E01
E02
EOM
HP
SPD
TACH
W
SG
CG
TAC
10
E
7
C
6
C
15
B
1
B
17
A
5
B
11
B
5
D 6
DLC3
4
9
W–B
W–B
W–B
W–B
V–R
B–W
R–B
BR
W–B
B–W
G–W
2
IL1
9
IL2
BR
1
P 1
Power Steering
Oil Pressure SW
B–W
R–B
B–W
V–R
W–B
W–B
W–B
BR
W–B
A
J24
Junction
Connector
A
J12
Junction
Connector
EV
IN
EV
IJ

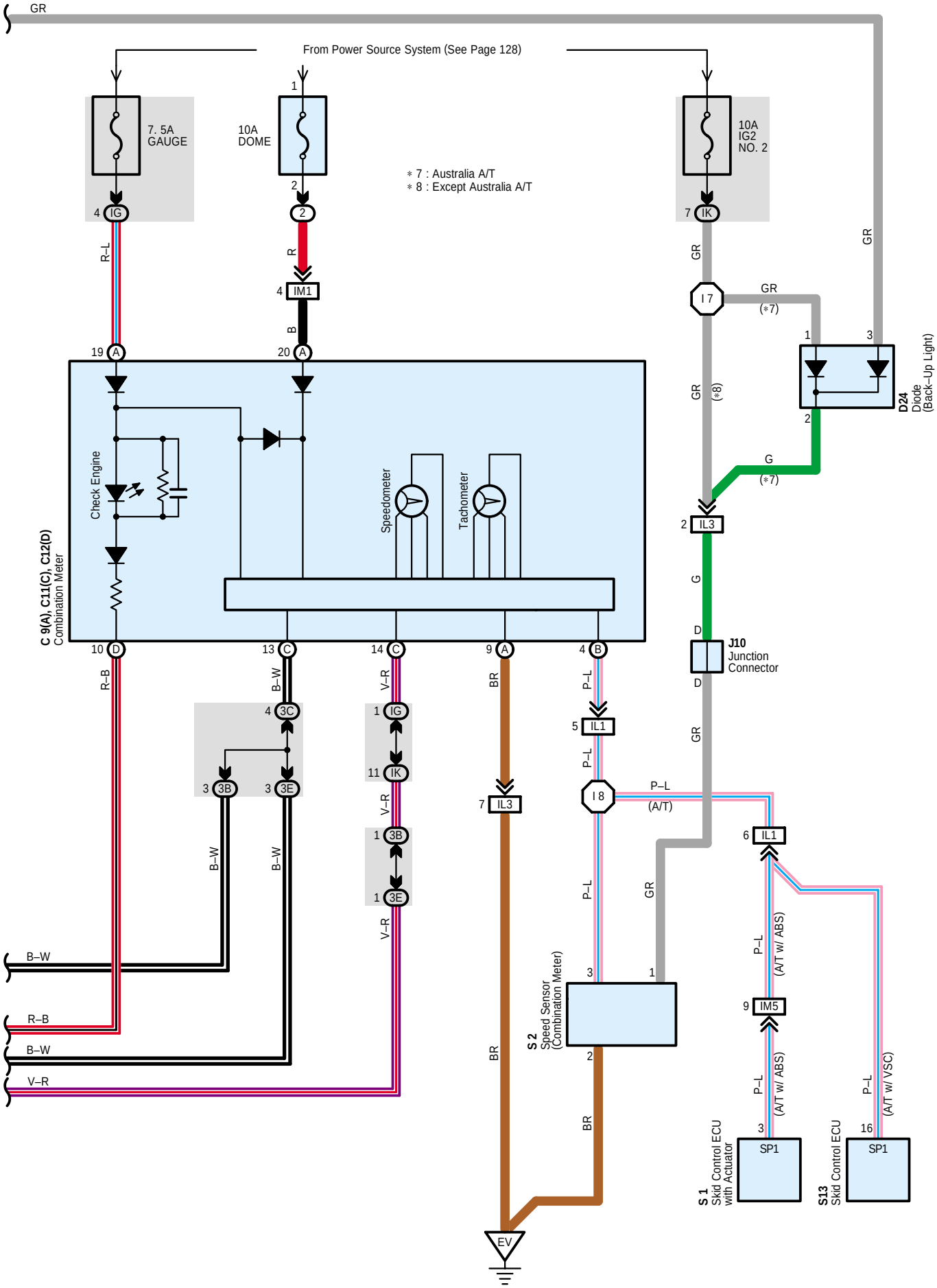
GR
From Power Source System (See Page 128)
7. 5A
GAUGE
10A
DOME
10A
IG2
NO. 2
* 7 : Australia A/T
* 8 : Except Australia A/T
4 IG
1
2
7 IK
R–L
R
B
4 IM1
19 A
20 A
GR
I 7
GR
(*7)
GR
(*8)
1
3
2
D24
Diode
(Back–Up Light)
G
(*7)
2 IL3
G
D
J10
Junction
Connector
D
GR
Check Engine
Speedometer
Tachometer
C 9(A), C11(C), C12(D)
Combination Meter
10 D
13 C
14 C
9 A
4 B
R–B
B–W
V–R
BR
P–L
4 3C
1 IG
11 IK
5 IL1
P–L
3 3B
3 3E
V–R
7 IL3
I 8
P–L
(A/T)
1 3B
1 3E
6 IL1
B–W
B–W
P–L
GR
P–L
(A/T w/ ABS)
B–W
R–B
B–W
V–R
3
1
9 IM5
S 2
Speed Sensor
(Combination Meter)
2
BR
BR
P–L
(A/T w/ ABS)
P–L
(A/T w/ VSC)
3
16
SP1
SP1
S 1
Skid Control ECU
with Actuator
S13
Skid Control ECU
EV

○ : **Parts Location**

Code		See Page
A3		38 (*1)
		58 (*10)
A14		38 (*1)
		58 (*10)
A21	A	48 (LHD)
		68 (RHD)
A22	B	48 (LHD)
		68 (RHD)
A28		48 (LHD)
		68 (RHD)
A36		48 (LHD)
		68 (RHD)
A46		38 (*1)
		58 (*10)
A47		38 (*1)
		58 (*10)
C3		38 (*1)
		58 (*10)
C9	A	49 (LHD)
		69 (RHD)
C11	C	49 (LHD)
		69 (RHD)
C12	D	49 (LHD)
		69 (RHD)
C23		38 (*1)
		58 (*10)
C24		38 (*1)
		58 (*10)
D6		49 (LHD)
		69 (RHD)
D24		69 (RHD)
E9	A	49 (LHD)
		69 (RHD)
E10	B	49 (LHD)
		69 (RHD)
E11	C	49 (LHD)
		69 (RHD)
E12	D	49 (LHD)
		69 (RHD)
E13	E	49 (LHD)
		69 (RHD)
F20	A	54 (*7)
		74 (*16)
F21	B	52 (*6)
		72 (*15)
F25		38 (*1)
		58 (*10)
H20		39 (*1)
		59 (*10)

Code	See Page
H21	39 (*1)
	59 (*10)
I1	39 (*1)
	59 (*10)
I2	39 (*1)
	59 (*10)
I3	39 (*1)
	59 (*10)
I4	39 (*1)
	59 (*10)
I6	39 (*1)
	59 (*10)
I7	39 (*1)
	59 (*10)
I8	39 (*1)
	59 (*10)
I9	39 (*1)
	59 (*10)
I14	50 (LHD)
	70 (RHD)
I16	39 (*1)
	59 (*10)
I17	39 (*1)
	59 (*10)
I18	39 (*1)
	59 (*10)
I19	39 (*1)
	59 (*10)
J1	39 (*1)
	59 (*10)
J2	39 (*1)
	59 (*10)
J5	39 (*1)
	59 (*10)
J7	50 (LHD)
	70 (RHD)
J9	50 (LHD)
	70 (RHD)
J10	50 (LHD)
	70 (RHD)
J11	50 (LHD)
	70 (RHD)
J12	50 (LHD)
	70 (RHD)
J14	50 (LHD)
	70 (RHD)
J16	50 (LHD)
	70 (RHD)
J17	50 (LHD)

Code	See Page
J17	70 (RHD)
J20	50 (LHD)
	70 (RHD)
J21	50 (LHD)
	70 (RHD)
J22	50 (LHD)
	70 (RHD)
J24	50 (LHD)
	70 (RHD)
J28	52 (*6)
	54 (*7)
	72 (*15)
	74 (*16)
J31	52 (*6)
	54 (*7)
	72 (*15)
	74 (*16)
K3	39 (*1)
	59 (*10)
K4	39 (*1)
	59 (*10)
N1	39 (*1)
	59 (*10)
P1	39 (*1)
	59 (*10)
S1	39 (*1)
	59 (*10)
S2	39 (*1)
	59 (*10)
S12	51 (LHD)
	71 (RHD)
S13	51 (LHD)
	71 (RHD)
S18	51 (LHD)
	71 (RHD)
T9	51 (LHD)
	71 (RHD)
T14	39 (*1)
	59 (*10)
V10	39 (*1)
	59 (*10)
V17	39 (*1)
	59 (*10)
V18	39 (*1)
	59 (*10)
V19	39 (*1)
	59 (*10)
W3	39 (*1)
	59 (*10)

* 1 : LHD 1GR-FE * 2 : LHD 3RZ-FE * 3 : LHD 1KD-FTV * 4 : LHD 1KZ-TE * 5 : LHD 5L-E * 6 : LHD 5-Door * 7 : LHD 3-Door
* 8 : LHD 8Way Power Seat * 9 : LHD Except 8Way Power Seat * 10 : RHD 1GR-FE * 11 : RHD 3RZ-FE * 12 : RHD 1KD-FTV
* 13 : RHD 1KZ-TE * 14 : RHD 5L-E * 15 : RHD 5-Door * 16 : RHD 3-Door * 17 : RHD 8Way Power Seat
* 18 : RHD Except 8Way Power Seat

: **Relay Blocks**

Code	See Page	Relay Blocks (Relay Block Location)
2	23	Engine Room R/B (Engine Compartment Left)
5	25 (LHD)	Passenger Side R/B (Right Kick Panel)
	25 (RHD)	Passenger Side R/B (Left Kick Panel)

: **Junction Block and Wire Harness Connector**

Code	See Page	Junction Block and Wire Harness (Connector Location)
ID	26 (LHD)	Engine Room Main Wire and Driver Side J/B (Lower Finish Panel)
	28 (RHD)	
IE	26 (LHD)	
	28 (RHD)	
IG	27 (LHD)	Instrument Panel Wire and Driver Side J/B (Lower Finish Panel)
	29 (RHD)	
IJ	27 (LHD)	
	29 (RHD)	
IK	27 (LHD)	
	29 (RHD)	
IL	27 (LHD)	
	29 (RHD)	
1A	32 (LHD)	Instrument Panel Wire and J/B No.1 (Instrument Panel Reinforcement Left)
	32 (RHD)	Instrument Panel Wire and J/B No.1 (Instrument Panel Reinforcement Right)
1E	32 (LHD)	Instrument Panel Wire and J/B No.1 (Instrument Panel Reinforcement Left)
	32 (RHD)	Instrument Panel Wire and J/B No.1 (Instrument Panel Reinforcement Right)
2A	34	Instrument Panel Wire and J/B No.2 (Instrument Panel Reinforcement Center)
2B		
3B	36 (LHD)	Instrument Panel Wire and J/B No.3 (Instrument Panel Reinforcement Right)
	36 (RHD)	Instrument Panel Wire and J/B No.3 (Instrument Panel Reinforcement Left)
3C	36 (LHD)	Instrument Panel Wire and J/B No.3 (Instrument Panel Reinforcement Right)
	36 (RHD)	Instrument Panel Wire and J/B No.3 (Instrument Panel Reinforcement Left)
3D	36 (LHD)	Instrument Panel Wire and J/B No.3 (Instrument Panel Reinforcement Right)
	36 (RHD)	Instrument Panel Wire and J/B No.3 (Instrument Panel Reinforcement Left)
3E	36 (LHD)	Instrument Panel Wire and J/B No.3 (Instrument Panel Reinforcement Right)
	36 (RHD)	Instrument Panel Wire and J/B No.3 (Instrument Panel Reinforcement Left)

: Connector Joining Wire Harness and Wire Harness

Code	See Page	Joining Wire Harness and Wire Harness (Connector Location)
EE1	78 (*1)	Engine Wire and Sensor Wire (Behind the Cylinder Head RH)
	102 (*10)	
IB1	88 (LHD)	Floor No.2 Wire and Engine Room Main Wire (Left Kick Panel)
	112 (RHD)	
IC3	88 (LHD)	Instrument Panel Wire and Engine Room Main Wire (Left Kick Panel)
	112 (RHD)	
IC4	88 (LHD)	
	112 (RHD)	
IF1	90 (LHD)	Instrument Panel Wire and Instrument Panel Wire (Near the J/B No.1)
	114 (RHD)	
IL1	92 (LHD)	Engine Wire and Instrument Panel Wire (Right Side of the Blower Unit)
	116 (RHD)	Engine Wire and Instrument Panel Wire (Left Side of the Blower Unit)
IL2	92 (LHD)	Engine Wire and Instrument Panel Wire (Right Side of the Blower Unit)
	116 (RHD)	Engine Wire and Instrument Panel Wire (Left Side of the Blower Unit)
IL3	92 (LHD)	Engine Wire and Instrument Panel Wire (Right Side of the Blower Unit)
	116 (RHD)	Engine Wire and Instrument Panel Wire (Left Side of the Blower Unit)
IM1	92 (LHD)	Instrument Panel Wire and Engine Room Main Wire (Right Kick Panel)
	116 (RHD)	
IM4	92 (LHD)	
	116 (RHD)	
IM5	92 (LHD)	
	116 (RHD)	
IN1	94 (LHD)	Instrument Panel Wire and Floor Wire (Right Kick Panel)

: Ground Points

Code	See Page	Ground Points Location
EB	78 (*1)	Front Left Fender
	102 (*10)	
EU	78 (*1)	Rear Side of Right Bank Cylinder Block
	102 (*10)	
EV	78 (*1)	Rear Side of Left Bank Cylinder Block
	102 (*10)	
EW	78 (*1)	Near the Washer Tank
	102 (*10)	
IJ	88 (LHD)	Left Kick Panel
	112 (RHD)	Right Kick Panel
IN	88 (LHD)	Right Kick Panel
	112 (RHD)	Left Kick Panel
BR	96 (*6)	Left Quarter Panel Inner
	100 (*7)	
	120 (*15)	
	124 (*16)	

* 1 : LHD 1GR-FE * 2 : LHD 3RZ-FE * 3 : LHD 1KD-FTV * 4 : LHD 1KZ-TE * 5 : LHD 5L-E * 6 : LHD 5-Door * 7 : LHD 3-Door
* 8 : LHD 8Way Power Seat * 9 : LHD Except 8Way Power Seat * 10 : RHD 1GR-FE * 11 : RHD 3RZ-FE * 12 : RHD 1KD-FTV
* 13 : RHD 1KZ-TE * 14 : RHD 5L-E * 15 : RHD 5-Door * 16 : RHD 3-Door * 17 : RHD 8Way Power Seat
* 18 : RHD Except 8Way Power Seat

: **Splice Points**

Code	See Page	Wire Harness with Splice Points	Code	See Page	Wire Harness with Splice Points
E11	78 (*1)	Engine Wire	I2	90 (LHD)	Engine Room Main Wire
	102 (*10)			114 (RHD)	Instrument Panel Wire
E12	78 (*1)		I4	90 (LHD)	Instrument Panel Wire
	102 (*10)			114 (RHD)	
E13	78 (*1)		I7	90 (LHD)	
	102 (*10)			114 (RHD)	
E15	78 (*1)	Sensor Wire	I8	90 (LHD)	Engine Wire
	102 (*10)			114 (RHD)	

* 1 : LHD 1GR-FE * 2 : LHD 3RZ-FE * 3 : LHD 1KD-FTV * 4 : LHD 1KZ-TE * 5 : LHD 5L-E * 6 : LHD 5-Door * 7 : LHD 3-Door
* 8 : LHD 8Way Power Seat * 9 : LHD Except 8Way Power Seat * 10 : RHD 1GR-FE * 11 : RHD 3RZ-FE * 12 : RHD 1KD-FTV
* 13 : RHD 1KZ-TE * 14 : RHD 5L-E * 15 : RHD 5-Door * 16 : RHD 3-Door * 17 : RHD 8Way Power Seat
* 18 : RHD Except 8Way Power Seat

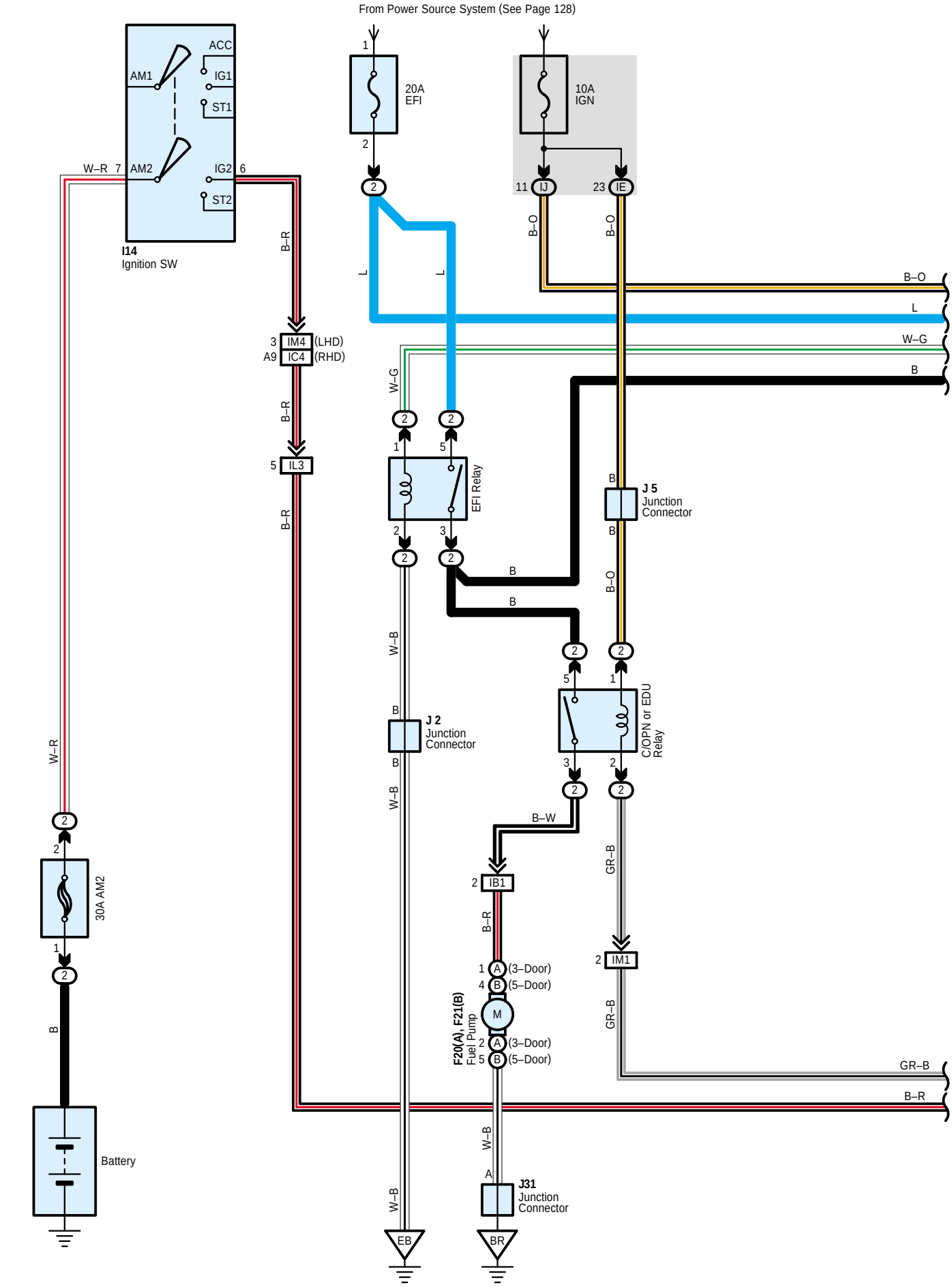
From Power Source System (See Page 128)
ACC
AM1
IG1
ST1
AM2
IG2
ST2
W–R 7
6
I14
Ignition SW
20A
EFI
10A
IGN
11 IJ
23 IE
B–O
L
W–G
B
B–R
3 IM4 (LHD)
A9 IC4 (RHD)
5 IL3
EFI Relay
J 5
Junction
Connector
J 2
Junction
Connector
C/OPN or EDU
Relay
B–W
IB1
GR–B
IM1
(3–Door)
(5–Door)
F20(A), F21(B)
Fuel Pump
M
W–B
J31
Junction
Connector
EB
BR
30A AM2
Battery

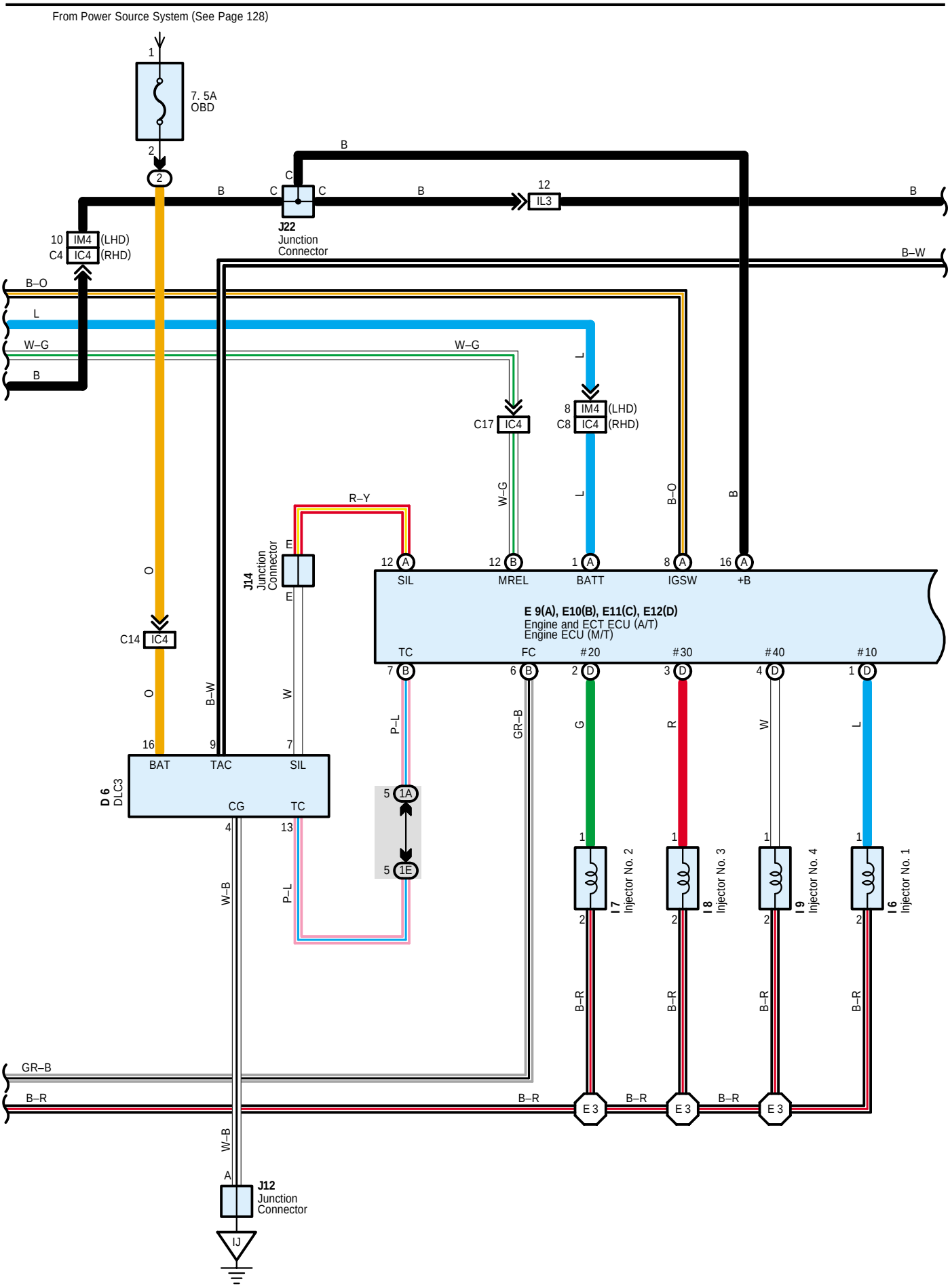
From Power Source System (See Page 128)
7. 5A
OBD
J22
Junction
Connector
IL3
IM4 (LHD)
IC4 (RHD)
IC4
J14
Junction
Connector
E 9(A), E10(B), E11(C), E12(D)
Engine and ECT ECU (A/T)
Engine ECU (M/T)
SIL
MREL
BATT
IGSW
+B
TC
FC
#20
#30
#40
#10
D 6
DLC3
BAT
TAC
CG
I 7
Injector No. 2
I 8
Injector No. 3
I 9
Injector No. 4
I 6
Injector No. 1
E 3
J12
Junction
Connector
IJ

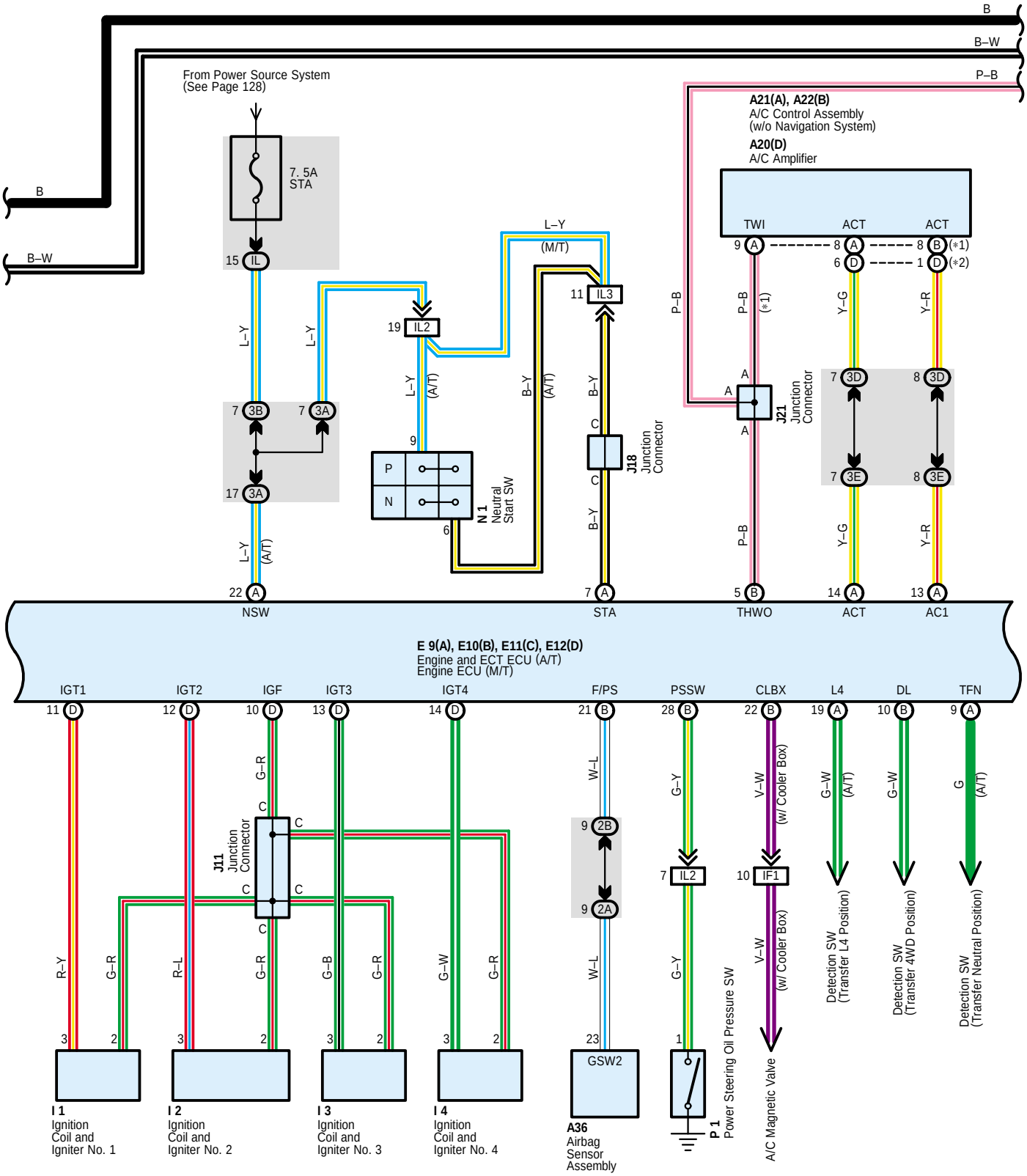

∗ 1 : Automatic A/C
∗ 2 : Manual A/C

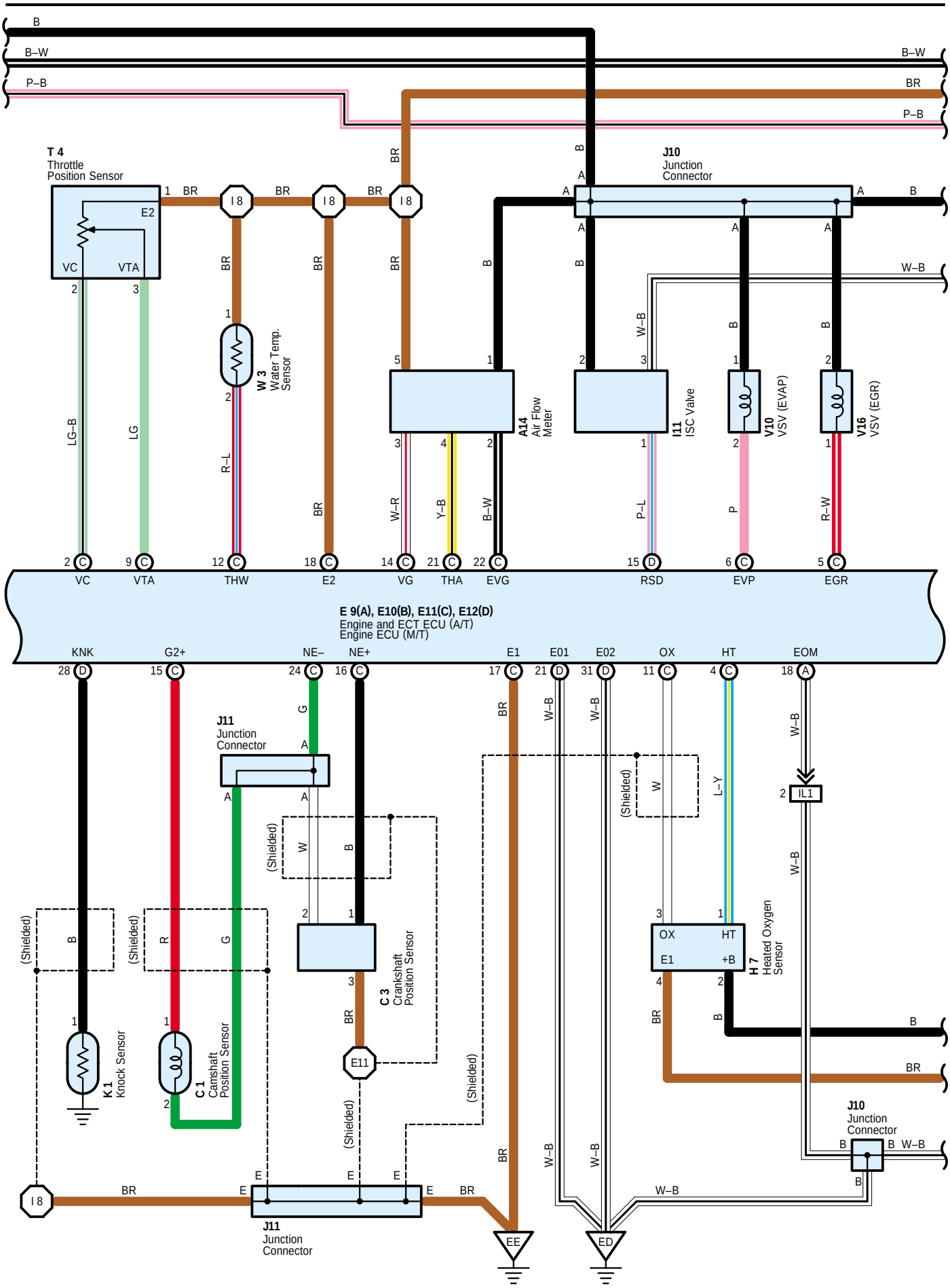
T 4
Throttle
Position Sensor
E2
VC
VTA
J10
Junction
Connector
W 3
Water Temp.
Sensor
A14
Air Flow
Meter
I11
ISC Valve
V10
VSV (EVAP)
V16
VSV (EGR)
VC
VTA
THW
E2
VG
THA
EVG
RSD
EVP
EGR
E 9(A), E10(B), E11(C), E12(D)
Engine and ECT ECU (A/T)
Engine ECU (M/T)
KNK
G2+
NE–
NE+
E1
E01
E02
OX
HT
EOM
J11
Junction
Connector
(Shielded)
K 1
Knock Sensor
C 1
Camshaft
Position Sensor
C 3
Crankshaft
Position Sensor
E11
H 7
Heated Oxygen
Sensor
OX
E1
HT
+B
IL1
J10
Junction
Connector
J11
Junction
Connector
EE
ED

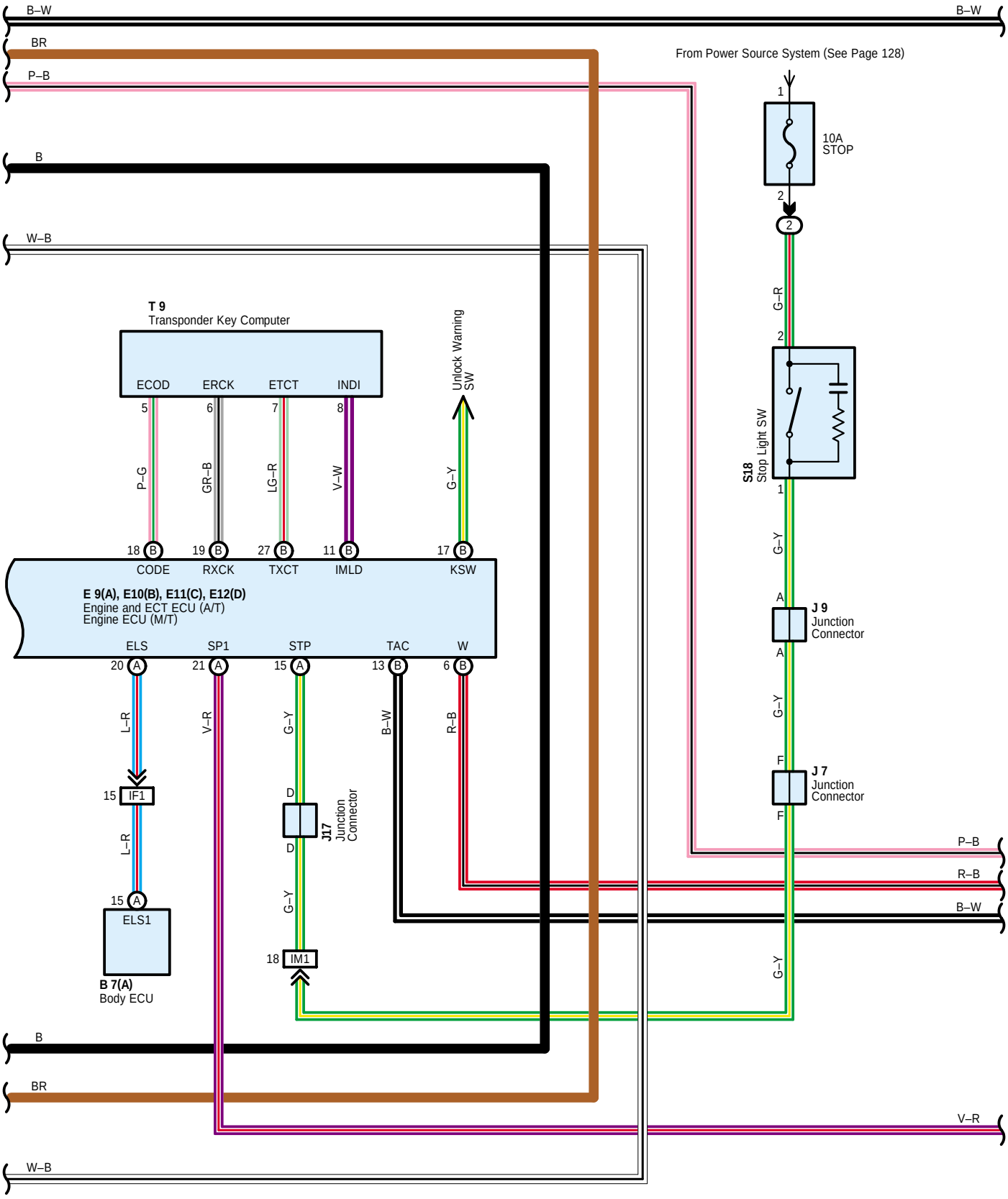
B–W
B–W
BR
P–B
B
W–B
From Power Source System (See Page 128)
1
10A
STOP
2
2
G–R
2
S18
Stop Light SW
1
G–Y
A
J 9
Junction
Connector
A
G–Y
F
J 7
Junction
Connector
F
T 9
Transponder Key Computer
ECOD
ERCK
ETCT
INDI
5
6
7
8
P–G
GR–B
LG–R
V–W
Unlock Warning
SW
G–Y
18 B
19 B
27 B
11 B
17 B
CODE
RXCK
TXCT
IMLD
KSW
E 9(A), E10(B), E11(C), E12(D)
Engine and ECT ECU (A/T)
Engine ECU (M/T)
ELS
SP1
STP
TAC
W
20 A
21 A
15 A
13 B
6 B
L–R
V–R
G–Y
B–W
R–B
15
IF1
L–R
15 A
ELS1
B 7(A)
Body ECU
D
D
J17
Junction
Connector
G–Y
18
IM1
P–B
R–B
B–W
G–Y
B
BR
V–R
W–B

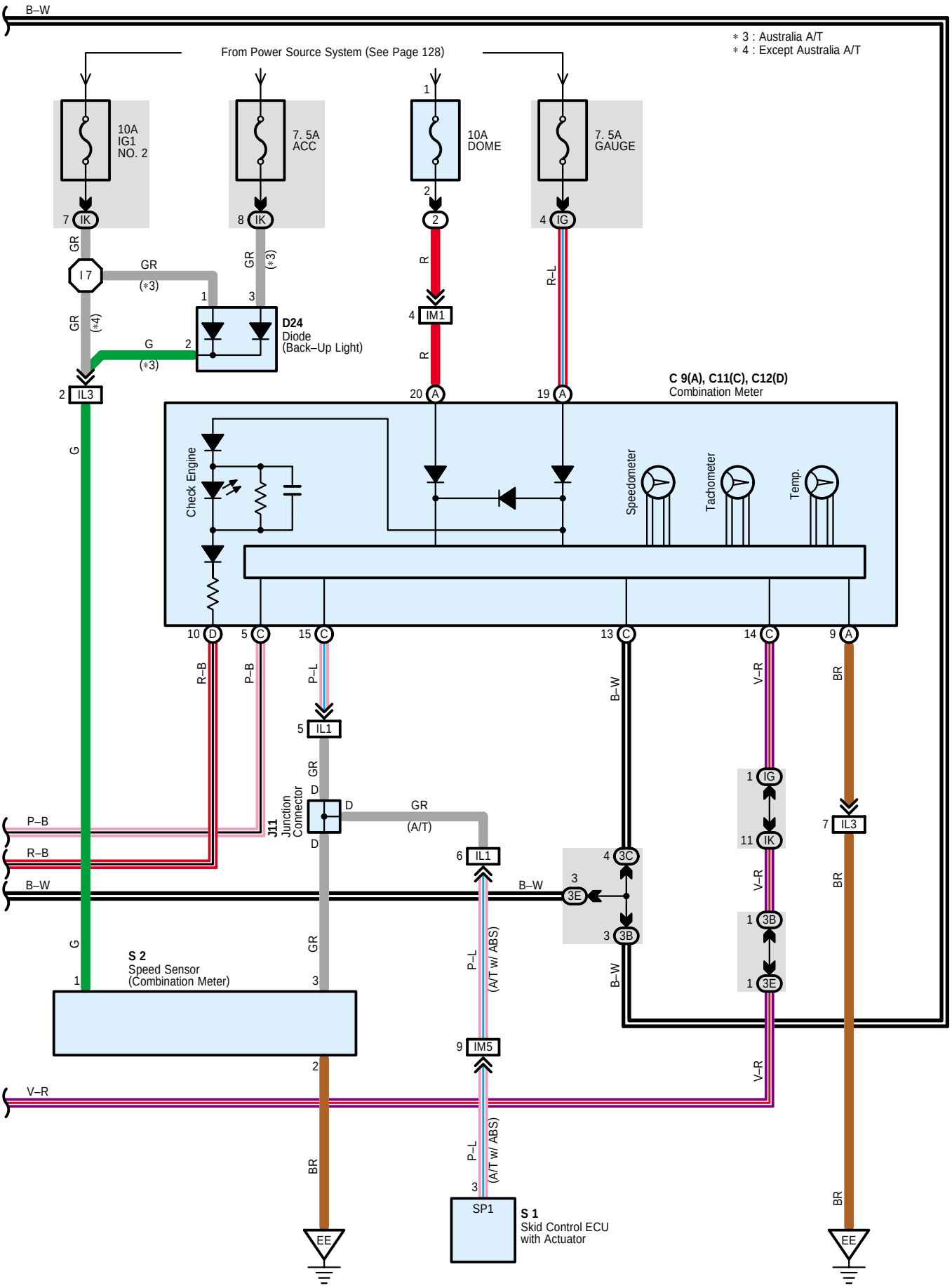
B–W
* 3 : Australia A/T
* 4 : Except Australia A/T
From Power Source System (See Page 128)
10A
IG1
NO. 2
7. 5A
ACC
10A
DOME
7. 5A
GAUGE
7 IK
8 IK
2
4 IG
GR
I 7
GR
(*3)
GR
(*3)
GR
(*4)
G
(*3)
D24
Diode
(Back–Up Light)
R
R–L
4 IM1
2 IL3
20 A
19 A
C 9(A), C11(C), C12(D)
Combination Meter
Check Engine
Speedometer
Tachometer
Temp.
10 D
5 C
15 C
13 C
14 C
9 A
R–B
P–B
P–L
B–W
V–R
BR
5 IL1
GR
J11
Junction
Connector
D
GR
(A/T)
6 IL1
1 IG
11 IK
7 IL3
4 3C
3 3E
3 3B
1 3B
1 3E
P–B
R–B
B–W
G
S 2
Speed Sensor
(Combination Meter)
1
3
P–L
(A/T w/ ABS)
9 IM5
2
V–R
BR
3
SP1
S 1
Skid Control ECU
with Actuator
EE
EE

System Outline

The engine control system utilizes a microcomputer and maintains overall control of the engine, transmission etc. An outline of the engine control is given here.

1. Input Signals

(1) Engine coolant temp. signal circuit
The water temp. sensor detects the engine coolant temp. and has a built–in thermistor with a resistance which varies according to the engine coolant temp. The engine coolant temp. is input into TERMINAL THW of the engine and ECT ECU (A/T), engine ECU (M/T) as a control signal.

(2) Intake air temp. signal circuit
The intake air temp. sensor is installed in the air flow meter and detects the intake air temp., which is input as a control signal to TERMINAL THA of the engine and ECT ECU (A/T), engine ECU (M/T).

(3) RPM signal circuit
The camshaft position is detected by the camshaft position sensor and is input into TERMINAL G2+ of the engine and ECT ECU (A/T), engine ECU (M/T) as a control signal. Also, the engine RPM is detected by the crankshaft position sensor and the signal is input into TERMINAL NE+ of the engine and ECT ECU (A/T), engine ECU (M/T).

(4) Throttle position sensor signal circuit
The throttle position sensor detects the throttle valve opening angle as a control signal, which is input into TERMINAL VTA of the engine and ECT ECU (A/T), engine ECU (M/T).

(5) Vehicle speed circuit
The speed sensor detects the vehicle speed, and the signal is input into TERMINAL SP1 of the engine and ECT ECU (A/T), engine ECU (M/T) via the combination meter.

(6) Battery signal circuit
Voltage is constantly applied to TERMINAL BATT of the engine and ECT ECU (A/T), engine ECU (M/T). When the ignition SW is turned on, the voltage for engine and ECT ECU (A/T), engine ECU (M/T) start up power supply is applied through the EFI relay, to TERMINAL +B of the engine and ECT ECU (A/T), engine ECU (M/T). The current from the IGN fuse flows to TERMINAL IGSW of the engine and ECT ECU (A/T), engine ECU (M/T).

(7) Intake air volume signal circuit
The intake air volume is detected by the air flow meter, and is input as a control signal to TERMINAL VG of the engine and ECT ECU (A/T), engine ECU (M/T).

(8) Stop light SW signal circuit
The stop light SW is used to detect whether the vehicle is braking or not, and the signal is input into TERMINAL STP of the engine and ECT ECU (A/T), engine ECU (M/T) as a control signal.

(9) Starter signal circuit
To confirm whether the engine is cranking, the voltage applied to the starter motor when the engine is cranking is detected, and is input into TERMINAL STA of the engine and ECT ECU (A/T), engine ECU (M/T) as a control signal.

(10) Engine knock signal circuit
Engine knocking is detected by the knock sensor, and is input into TERMINAL KNK of the engine and ECT ECU (A/T), engine ECU (M/T) as a control signal.

(11) A/C SW signal system
The operating voltage of the A/C control assembly (Automatic A/C), A/C amplifier (Manual A/C) is detected and input in the form of a control signal to TERMINAL AC1 of the engine and ECT ECU (A/T), engine ECU (M/T).

2. Control System

∗ EFI system

The EFI system monitors the engine condition through the signals input from each sensors to the engine and ECT ECU (A/T), engine ECU (M/T). The control signal is sent to the engine and ECT ECU (A/T), engine ECU (M/T) TERMINALS #10, #20, #30 and #40 to operate the injector (Fuel injection). The EFI system controls the fuel injection by the engine and ECT ECU (A/T), engine ECU (M/T) in response to the driving conditions.

∗ ESA system

The ESA system monitors the engine condition through the signals input from each sensors to the engine and ECT ECU (A/T), engine ECU (M/T). The best ignition timing is decided according to this data and the data memorized in the engine and ECT ECU (A/T), engine ECU (M/T). The control signal is output to TERMINALS IGT1, IGT2, IGT3 and IGT4, and these signals control the igniter to provide the best ignition timing.

3. Diagnosis System

When there is a malfunction in the engine and ECT ECU (A/T), engine ECU (M/T) signal system, the malfunctioning system is recorded in the memory. The malfunctioning system can be found by reading the code displayed on the check engine warning light.

4. Fail-Safe System

When a malfunction has occurred in any system, there is a possibility of causing engine trouble due to continued control based on that system. In that case, the fail-safe system either controls the system using the data (Standard values) recorded in the engine and ECT ECU (A/T), engine ECU (M/T) memory, or else stops the engine.

Service Hints

EFI Relay

5-3 : Closed with the ignition SW at ON position

W3 Water Temp. Sensor

1-2 : Approx. 15.0 kΩ (-20°C, -4°F)
: Approx. 2.45 kΩ (20°C, 68°F)
: Approx. 0.32 kΩ (80°C, 176°F)
: Approx. 0.14 kΩ (110°C, 230°F)

E9 (A), E10 (B), E11 (C), E12 (D) Engine and ECT ECU (A/T), Engine ECU (M/T)

BATT-E1 : Always 9.0-14.0 volts
IGSW-E1 : 9.0-14.0 volts with the ignition SW at ON position
+B-E1 : 9.0-14.0 volts with the ignition SW at ON position
VC-E1 : 4.5-5.5 volts with the ignition SW at ON position
VTA-E1 : 0.4-1.0 volts with the ignition SW on and throttle valve fully closed
: 3.2-4.8 volts with the ignition SW on and throttle valve fully open
THA-E1 : 0.5-3.4 volts with the idling, intake air temp. 0°C (32°F) -80°C (176°F)
THW-E1 : 0.2-1.0 volts with the idling, engine coolant temp. 60°C (140°F) -120°C (248°F)
STA-E1 : 6.0 volts or more with the engine cranking
W-E1 : 9.0-14.0 volts with the idling and check engine warning light off
SP1-E1 : Pulse generation with the vehicle moving
STP-E1 : 7.5-14.0 volts with the brake pedal depressed

○ : **Parts Location**

Code		See Page	Code	See Page	Code	See Page
A14		40 (*2)	H7	41 (*2)	J14	70 (RHD)
		60 (*11)		61 (*11)	J17	50 (LHD)
A20	D	48 (LHD)	I1	41 (*2)		70 (RHD)
		68 (RHD)		61 (*11)	J18	50 (LHD)
A21	A	48 (LHD)	I2	41 (*2)		70 (RHD)
		68 (RHD)		61 (*11)	J21	50 (LHD)
A22	B	48 (LHD)	I3	41 (*2)		70 (RHD)
		68 (RHD)		61 (*11)	J22	50 (LHD)
A36		48 (LHD)	I4	41 (*2)		70 (RHD)
		68 (RHD)		61 (*11)	J31	52 (*6)
B7	A	48 (LHD)	I6	41 (*2)		54 (*7)
		68 (RHD)		61 (*11)		72 (*15)
C1		40 (*2)	I7	41 (*2)		74 (*16)
		60 (*11)		61 (*11)	K1	41 (*2)
C3		40 (*2)	I8	41 (*2)		61 (*11)
		60 (*11)		61 (*11)	N1	41 (*2)
C9	A	49 (LHD)	I9	41 (*2)		61 (*11)
		69 (RHD)		61 (*11)	P1	41 (*2)
C11	C	49 (LHD)	I11	41 (*2)		61 (*11)
		69 (RHD)		61 (*11)	S1	41 (*2)
C12	D	49 (LHD)	I14	50 (LHD)		61 (*11)
		69 (RHD)		70 (RHD)	S2	41 (*2)
D6		49 (LHD)	J2	41 (*2)		61 (*11)
		69 (RHD)		61 (*11)	S18	51 (LHD)
D24		69 (RHD)	J5	41 (*2)		71 (RHD)
E9	A	49 (LHD)		61 (*11)	T4	41 (*2)
		69 (RHD)	J7	50 (LHD)		61 (*11)
E10	B	49 (LHD)		70 (RHD)	T9	51 (LHD)
		69 (RHD)	J9	50 (LHD)		71 (RHD)
E11	C	49 (LHD)		70 (RHD)	V10	41 (*2)
		69 (RHD)	J10	50 (LHD)		61 (*11)
E12	D	49 (LHD)		70 (RHD)	V16	41 (*2)
		69 (RHD)	J11	50 (LHD)		61 (*11)
F20	A	54 (*7)		70 (RHD)	W3	41 (*2)
		74 (*16)	J12	50 (LHD)		61 (*11)
F21	B	52 (*6)		70 (RHD)		
		72 (*15)	J14	50 (LHD)		

▭ : **Relay Blocks**

Code	See Page	Relay Blocks (Relay Block Location)
2	23	Engine Room R/B (Engine Compartment Left)

* 1 : LHD 1GR-FE * 2 : LHD 3RZ-FE * 3 : LHD 1KD-FTV * 4 : LHD 1KZ-TE * 5 : LHD 5L-E * 6 : LHD 5-Door * 7 : LHD 3-Door
* 8 : LHD 8Way Power Seat * 9 : LHD Except 8Way Power Seat * 10 : RHD 1GR-FE * 11 : RHD 3RZ-FE * 12 : RHD 1KD-FTV
* 13 : RHD 1KZ-TE * 14 : RHD 5L-E * 15 : RHD 5-Door * 16 : RHD 3-Door * 17 : RHD 8Way Power Seat
* 18 : RHD Except 8Way Power Seat

: **Junction Block and Wire Harness Connector**

Code	See Page	Junction Block and Wire Harness (Connector Location)
IE	26 (LHD)	Engine Room Main Wire and Driver Side J/B (Lower Finish Panel)
	28 (RHD)	
IG	27 (LHD)	Instrument Panel Wire and Driver Side J/B (Lower Finish Panel)
	29 (RHD)	
IJ	27 (LHD)	
	29 (RHD)	
IK	27 (LHD)	
	29 (RHD)	
IL	27 (LHD)	
	29 (RHD)	
1A	32 (LHD)	Instrument Panel Wire and J/B No.1 (Instrument Panel Reinforcement Left)
	32 (RHD)	Instrument Panel Wire and J/B No.1 (Instrument Panel Reinforcement Right)
1E	32 (LHD)	Instrument Panel Wire and J/B No.1 (Instrument Panel Reinforcement Left)
	32 (RHD)	Instrument Panel Wire and J/B No.1 (Instrument Panel Reinforcement Right)
2A	34	Instrument Panel Wire and J/B No.2 (Instrument Panel Reinforcement Center)
2B		
3A	36 (LHD)	Instrument Panel Wire and J/B No.3 (Instrument Panel Reinforcement Right)
	36 (RHD)	Instrument Panel Wire and J/B No.3 (Instrument Panel Reinforcement Left)
3B	36 (LHD)	Instrument Panel Wire and J/B No.3 (Instrument Panel Reinforcement Right)
	36 (RHD)	Instrument Panel Wire and J/B No.3 (Instrument Panel Reinforcement Left)
3C	36 (LHD)	Instrument Panel Wire and J/B No.3 (Instrument Panel Reinforcement Right)
	36 (RHD)	Instrument Panel Wire and J/B No.3 (Instrument Panel Reinforcement Left)
3D	36 (LHD)	Instrument Panel Wire and J/B No.3 (Instrument Panel Reinforcement Right)
	36 (RHD)	Instrument Panel Wire and J/B No.3 (Instrument Panel Reinforcement Left)
3E	36 (LHD)	Instrument Panel Wire and J/B No.3 (Instrument Panel Reinforcement Right)
	36 (RHD)	Instrument Panel Wire and J/B No.3 (Instrument Panel Reinforcement Left)

: **Connector Joining Wire Harness and Wire Harness**

Code	See Page	Joining Wire Harness and Wire Harness (Connector Location)
IB1	88 (LHD)	Floor No.2 Wire and Engine Room Main Wire (Left Kick Panel)
	112 (RHD)	
IC4	88 (LHD)	Instrument Panel Wire and Engine Room Main Wire (Left Kick Panel)
	112 (RHD)	
IF1	90 (LHD)	Instrument Panel Wire and Instrument Panel Wire (Near the J/B No.1)
	114 (RHD)	
IL1	92 (LHD)	Engine Wire and Instrument Panel Wire (Right Side of the Blower Unit)
	116 (RHD)	Engine Wire and Instrument Panel Wire (Left Side of the Blower Unit)
IL2	92 (LHD)	Engine Wire and Instrument Panel Wire (Right Side of the Blower Unit)
	116 (RHD)	Engine Wire and Instrument Panel Wire (Left Side of the Blower Unit)
IL3	92 (LHD)	Engine Wire and Instrument Panel Wire (Right Side of the Blower Unit)
	116 (RHD)	Engine Wire and Instrument Panel Wire (Left Side of the Blower Unit)
IM1	92 (LHD)	Instrument Panel Wire and Engine Room Main Wire (Right Kick Panel)
	116 (RHD)	
IM4	92 (LHD)	
IM5	92 (LHD)	
	116 (RHD)	

▽ : **Ground Points**

Code	See Page	Ground Points Location
EB	80 (*2)	Front Left Fender
	104 (*11)	
ED	80 (*2)	Ignition Coil Bracket
	104 (*11)	
EE	80 (*2)	Intake Manifold
	104 (*11)	
IJ	88 (LHD)	Left Kick Panel
	112 (RHD)	Right Kick Panel
BR	96 (*6)	Left Quarter Panel Inner
	100 (*7)	
	120 (*15)	
	124 (*16)	

◯ : **Splice Points**

Code	See Page	Wire Harness with Splice Points	Code	See Page	Wire Harness with Splice Points
E3	80 (*2)	Engine Wire	I7	90 (LHD)	Instrument Panel Wire
	104 (*11)			114 (RHD)	
E11	80 (*2)		I8	90 (LHD)	Engine Wire
	104 (*11)			114 (RHD)	

* 1 : LHD 1GR–FE * 2 : LHD 3RZ–FE * 3 : LHD 1KD–FTV * 4 : LHD 1KZ–TE * 5 : LHD 5L–E * 6 : LHD 5–Door * 7 : LHD 3–Door
* 8 : LHD 8Way Power Seat * 9 : LHD Except 8Way Power Seat * 10 : RHD 1GR–FE * 11 : RHD 3RZ–FE * 12 : RHD 1KD–FTV
* 13 : RHD 1KZ–TE * 14 : RHD 5L–E * 15 : RHD 5–Door * 16 : RHD 3–Door * 17 : RHD 8Way Power Seat
* 18 : RHD Except 8Way Power Seat

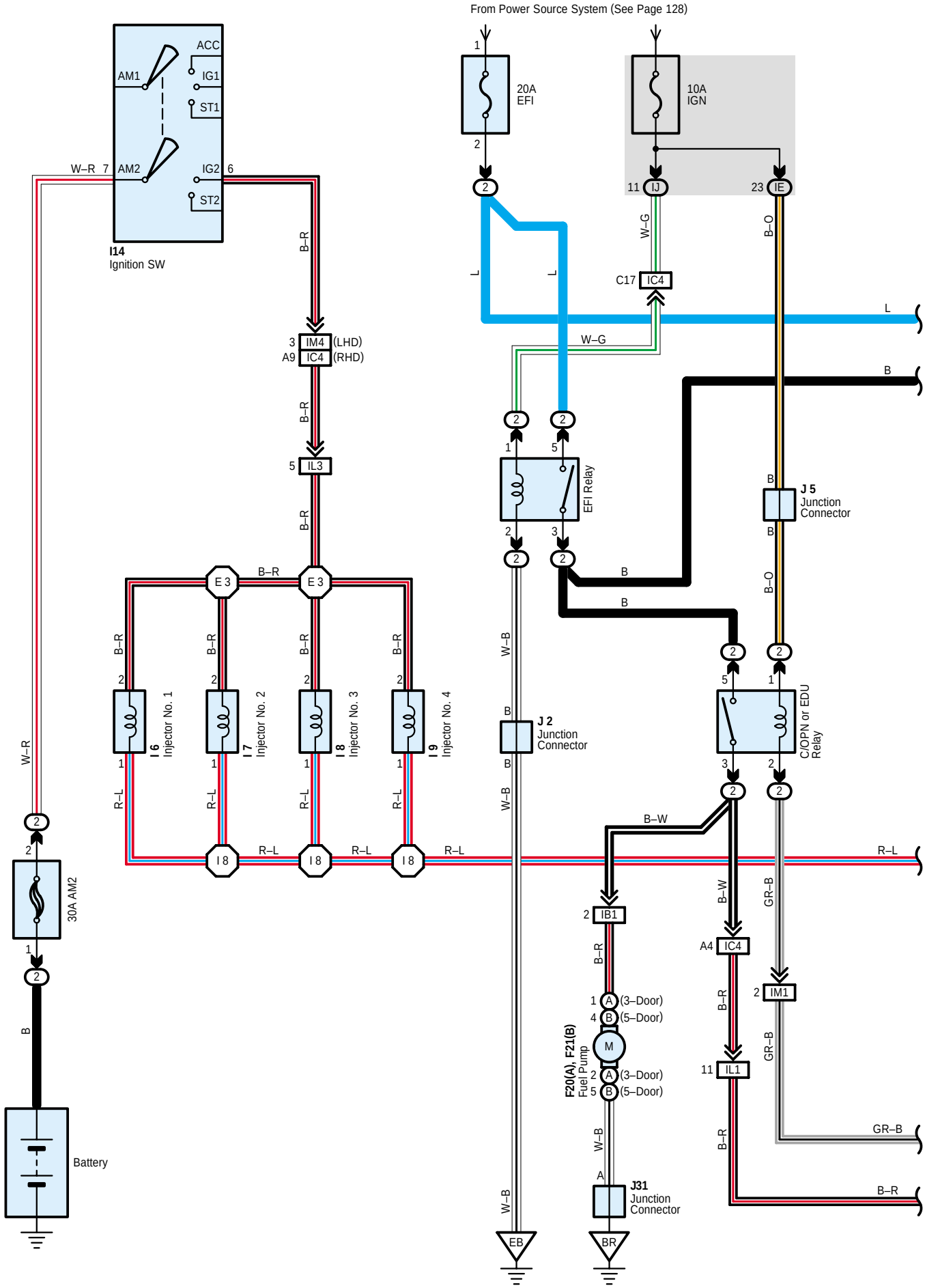
From Power Source System (See Page 128)
ACC
AM1
IG1
ST1
AM2
IG2
ST2
W–R 7
6
I14
Ignition SW
B–R
3 IM4 (LHD)
A9 IC4 (RHD)
5 IL3
E 3
I 6 Injector No. 1
I 7 Injector No. 2
I 8 Injector No. 3
I 9 Injector No. 4
R–L
I 8
30A AM2
B
Battery
20A EFI
10A IGN
11 IJ
23 IE
W–G
B–O
C17 IC4
L
B
EFI Relay
J 5 Junction Connector
J 2 Junction Connector
W–B
C/OPN or EDU Relay
B–W
2 IB1
A4 IC4
2 IM1
GR–B
F20(A), F21(B) Fuel Pump
1 A (3–Door)
4 B (5–Door)
2 A (3–Door)
5 B (5–Door)
M
11 IL1
J31 Junction Connector
EB
BR

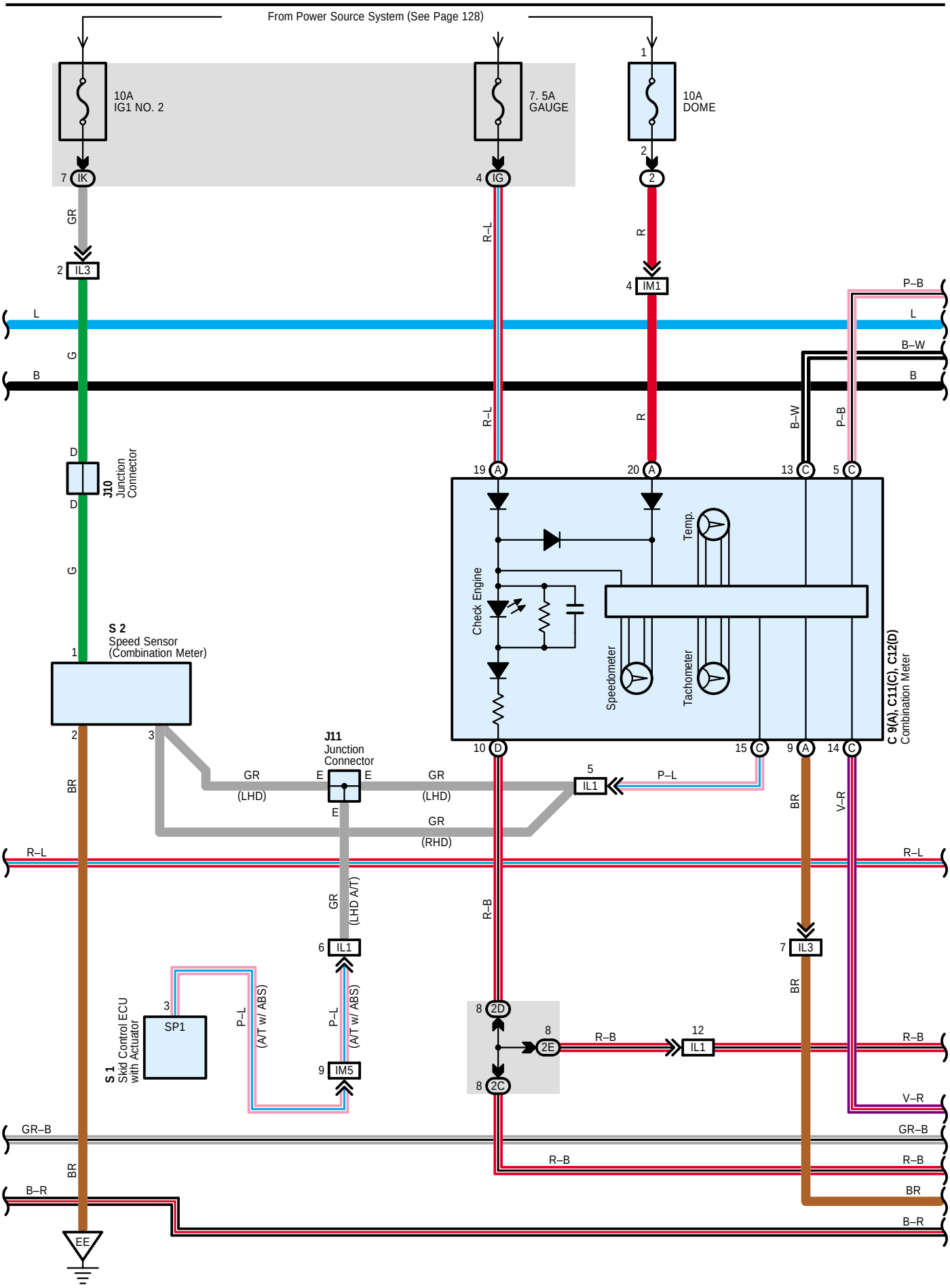
From Power Source System (See Page 128)
10A
IG1 NO. 2
7. 5A
GAUGE
10A
DOME
7 IK
4 IG
1
2
2
2 IL3
4 IM1
GR
R–L
R
L
G
B
P–B
B–W
D
J10
Junction
Connector
19 A
20 A
13 C
5 C
Temp.
Check Engine
Speedometer
Tachometer
C 9(A), C11(C), C12(D)
Combination Meter
S 2
Speed Sensor
(Combination Meter)
1
2
3
J11
Junction
Connector
E
GR
(LHD)
GR
(RHD)
10 D
15 C
9 A
14 C
5
IL1
P–L
BR
V–R
R–L
R–B
6 IL1
7 IL3
GR
(LHD A/T)
P–L
(A/T w/ ABS)
3
SP1
S 1
Skid Control ECU
with Actuator
9 IM5
8 2D
8 2E
8 2C
12
IL1
R–B
V–R
GR–B
BR
B–R
EE

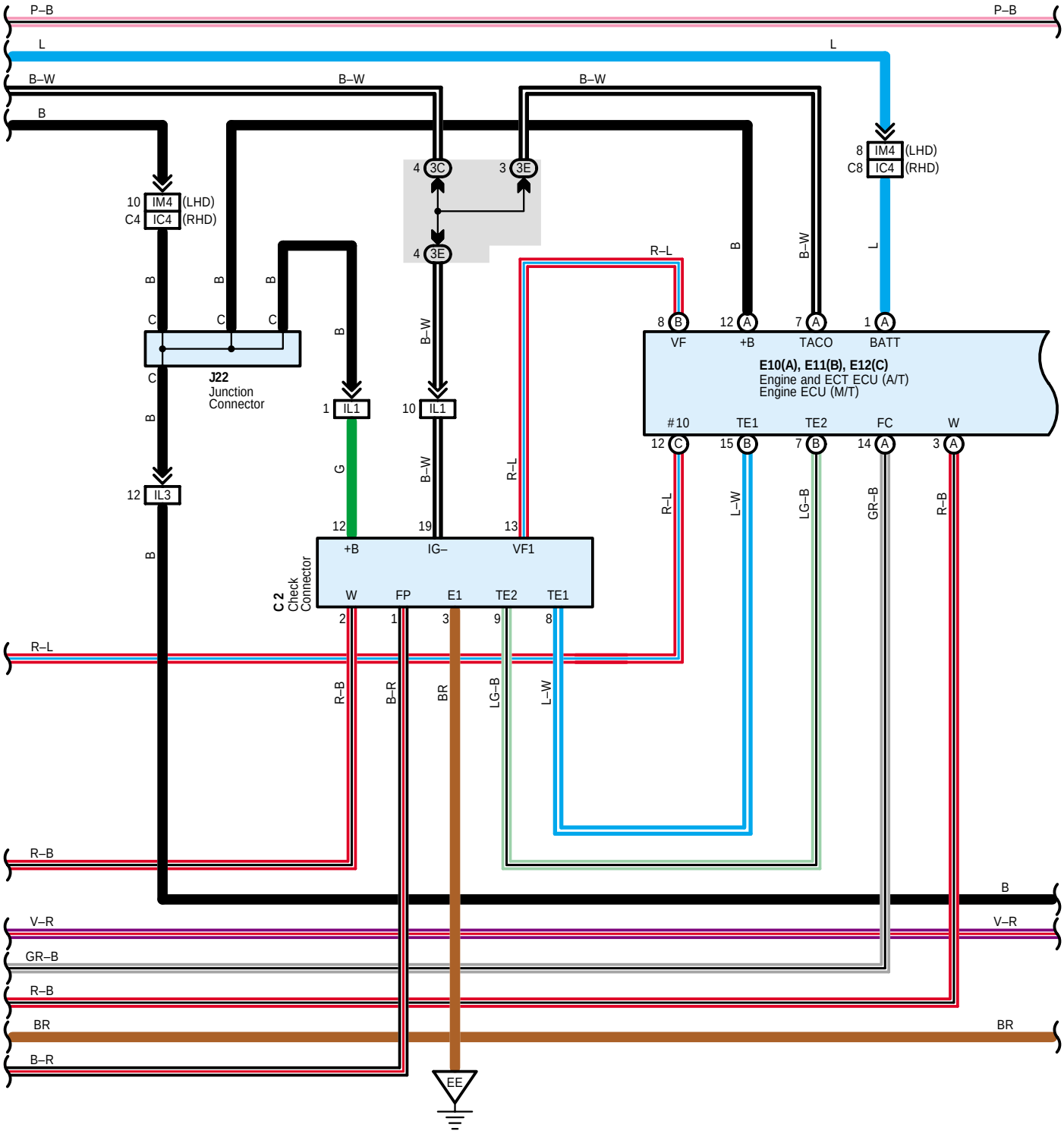
P–B
P–B
L
L
B–W
B–W
B–W
B
10 IM4 (LHD)
C4 IC4 (RHD)
8 IM4 (LHD)
C8 IC4 (RHD)
4 3C
3 3E
4 3E
R–L
B
B–W
L
B
B
B
C
C
C
C
J22
Junction
Connector
B
B–W
8 B
12 A
7 A
1 A
VF
+B
TACO
BATT
E10(A), E11(B), E12(C)
Engine and ECT ECU (A/T)
Engine ECU (M/T)
1 IL1
10 IL1
#10
TE1
TE2
FC
W
12 C
15 B
7 B
14 A
3 A
B
12 IL3
G
B–W
R–L
R–L
L–W
LG–B
GR–B
R–B
12
19
13
+B
IG–
VF1
C 2
Check
Connector
W
FP
E1
TE2
TE1
2
1
3
9
8
R–L
R–B
B–R
BR
LG–B
L–W
R–B
B
V–R
V–R
GR–B
R–B
BR
BR
B–R
EE

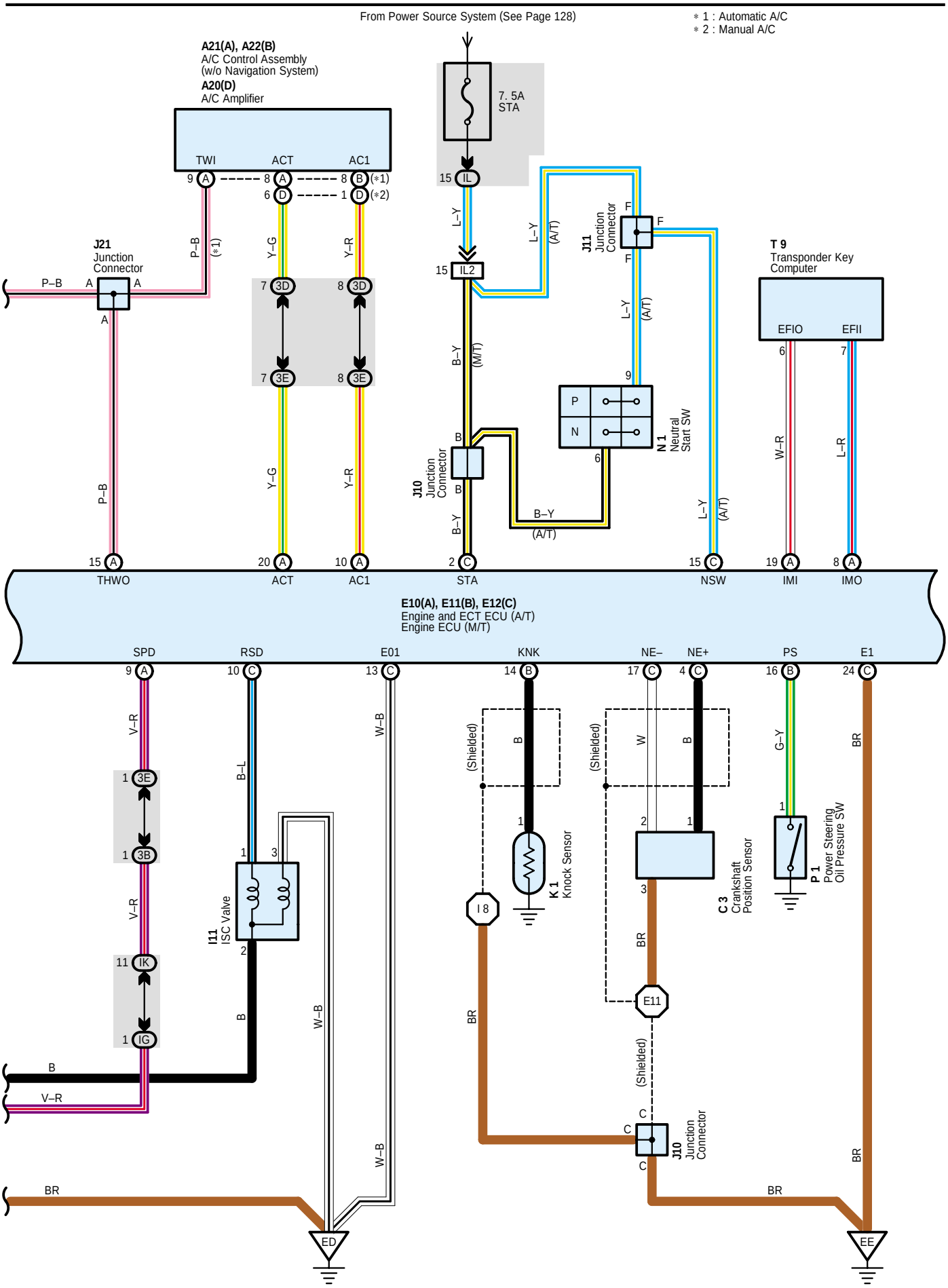
From Power Source System (See Page 128)
* 1 : Automatic A/C
* 2 : Manual A/C
A21(A), A22(B)
A/C Control Assembly
(w/o Navigation System)
A20(D)
A/C Amplifier
TWI
ACT
AC1
7. 5A
STA
J21
Junction
Connector
J11
Junction
Connector
T 9
Transponder Key
Computer
EFIO
EFII
J10
Junction
Connector
N 1
Neutral
Start SW
THWO
ACT
AC1
STA
NSW
IMI
IMO
E10(A), E11(B), E12(C)
Engine and ECT ECU (A/T)
Engine ECU (M/T)
SPD
RSD
E01
KNK
NE–
NE+
PS
E1
I11
ISC Valve
K 1
Knock Sensor
C 3
Crankshaft
Position Sensor
P 1
Power Steering
Oil Pressure SW
(Shielded)
ED
EE

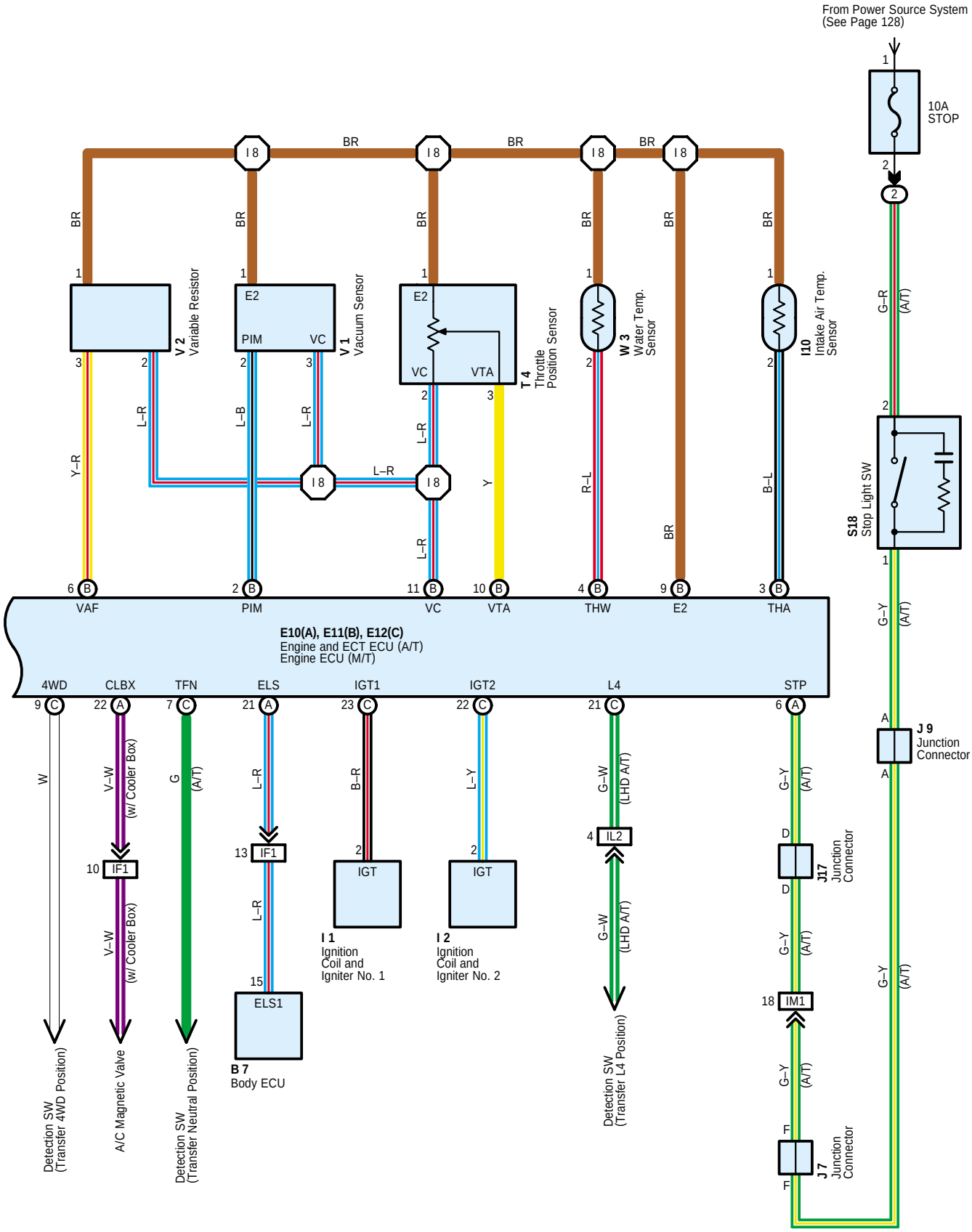
From Power Source System
(See Page 128)
10A
STOP
BR
I 8
V 2
Variable Resistor
V 1
Vacuum Sensor
T 4
Throttle
Position Sensor
W 3
Water Temp.
Sensor
I10
Intake Air Temp.
Sensor
S18
Stop Light SW
E2
PIM
VC
VTA
Y–R
L–R
L–B
Y
R–L
B–L
G–R
(A/T)
G–Y
VAF
THW
THA
E10(A), E11(B), E12(C)
Engine and ECT ECU (A/T)
Engine ECU (M/T)
4WD
CLBX
TFN
ELS
IGT1
IGT2
L4
STP
W
V–W
(w/ Cooler Box)
G
B–R
L–Y
G–W
(LHD A/T)
IF1
IGT
IL2
ELS1
IM1
I 1
Ignition
Coil and
Igniter No. 1
I 2
Ignition
Coil and
Igniter No. 2
B 7
Body ECU
J 9
Junction
Connector
J17
Junction
Connector
J 7
Junction
Connector
Detection SW
(Transfer 4WD Position)
A/C Magnetic Valve
Detection SW
(Transfer Neutral Position)
Detection SW
(Transfer L4 Position)

System Outline

The engine control system utilizes a microcomputer and maintains overall control of the engine, transmission etc. An outline of the engine control is given here.

1. Input Signals

(1) Engine coolant temp. signal circuit

The water temp. sensor detects the engine coolant temp. and has a built-in thermistor with a resistance which varies according to the engine coolant temp. The engine coolant temp. is input into TERMINAL THW of the engine and ECT ECU (A/T), engine ECU (M/T) as a control signal.

(2) Intake air temp. signal circuit

The intake air temp. sensor is detects the intake air temp., which is input as a control signal to TERMINAL THA of the engine and ECT ECU (A/T), engine ECU (M/T).

(3) RPM signal circuit

The engine RPM is detected by the crankshaft position sensor and the signal is input into TERMINAL NE+ of the engine and ECT ECU (A/T), engine ECU (M/T).

(4) Throttle position sensor signal circuit

The throttle position sensor detects the throttle valve opening angle as a control signal, which is input into TERMINAL VTA of the engine and ECT ECU (A/T), engine ECU (M/T).

(5) Vehicle speed circuit

The speed sensor detects the vehicle speed, and the signal is input into TERMINAL SPD of the engine and ECT ECU (A/T), engine ECU (M/T) via the combination meter.

(6) Battery signal circuit

Voltage is constantly applied to TERMINAL BATT of the engine and ECT ECU (A/T), engine ECU (M/T). When the ignition SW is turned on, the voltage for engine and ECT ECU (A/T), engine ECU (M/T) start up power supply is applied through the EFI relay, to TERMINAL +B of the engine and ECT ECU (A/T), engine ECU (M/T).

(7) Stop light SW signal circuit

The stop light SW is used to detect whether the vehicle is braking or not, and the signal is input into TERMINAL STP of the engine and ECT ECU (A/T), engine ECU (M/T) as a control signal.

(8) Starter signal circuit

To confirm whether the engine is cranking, the voltage applied to the starter motor when the engine is cranking is detected, and is input into TERMINAL STA of the engine and ECT ECU (A/T), engine ECU (M/T) as a control signal.

(9) Engine knock signal circuit

Engine knocking is detected by the knock sensor, and is input into TERMINAL KNK of the engine and ECT ECU (A/T), engine ECU (M/T) as a control signal.

(10) A/C SW signal system

The operating voltage of the A/C control assembly (Automatic A/C), A/C amplifier (Manual A/C) is detected and input in the form of a control signal to TERMINAL AC1 of the engine and ECT ECU (A/T), engine ECU (M/T).

2. Control System

∗ EFI system

The EFI system monitors the engine condition through the signals input from each sensors to the engine and ECT ECU (A/T), engine ECU (M/T). The control signal is sent to the engine and ECT ECU (A/T), engine ECU (M/T) TERMINAL #10 to operate the injector (Fuel injection). The EFI system controls the fuel injection by the engine and ECT ECU (A/T), engine ECU (M/T) in response to the driving conditions.

∗ ESA system

The ESA system monitors the engine condition through the signals input from each sensors to the engine and ECT ECU (A/T), engine ECU (M/T). The best ignition timing is decided according to this data and the data memorized in the engine and ECT ECU (A/T), engine ECU (M/T). The control signal is output to TERMINALS IGT1, IGT2, and these signals control the igniter to provide the best ignition timing.

3. Diagnosis System

When there is a malfunction in the engine and ECT ECU (A/T), engine ECU (M/T) signal system, the malfunctioning system is recorded in the memory. The malfunctioning system can be found by reading the code displayed on the check engine warning light.

4. Fail-Safe System

When a malfunction has occurred in any system, there is a possibility of causing engine trouble due to continued control based on that system. In that case, the fail-safe system either controls the system using the data (Standard values) recorded in the engine and ECT ECU (A/T), engine ECU (M/T) memory, or else stops the engine.

Service Hints

EFI Relay

5–3 : Closed with the ignition SW at ON position

W3 Water Temp. Sensor

1–2 : Approx. 15.0 kΩ (–20˚C, –4˚F)
: Approx. 2.45 kΩ (20˚C, 68˚F)
: Approx. 0.32 kΩ (80˚C, 176˚F)
: Approx. 0.14 kΩ (110˚C, 230˚F)

E10 (A), E11 (B), E12 (C) Engine and ECT ECU (A/T), Engine ECU (M/T)

BATT–E1 : Always 9.0–14.0 volts
+B–E1 : 9.0–14.0 volts with the ignition SW at ON position
VC–E1 : 4.5–5.5 volts with the ignition SW at ON position
VTA–E1 : 0.4–1.0 volts with the ignition SW on and throttle valve fully closed
: 3.2–4.8 volts with the ignition SW on and throttle valve fully open
THA–E1 : 0.5–3.4 volts with the idling, intake air temp. 0˚C (32˚F) –80˚C (176˚F)
THW–E1 : 0.2–1.0 volts with the idling, engine coolant temp. 60˚C (140˚F) –120˚C (248˚F)
STA–E1 : 6.0 volts or more with the engine cranking
W–E1 : 9.0–14.0 volts with the idling and check engine warning light off
SPD–E1 : Pulse generation with the vehicle moving
STP–E1 : 7.5–14.0 volts with the brake pedal depressed

: Parts Location

Code		See Page	Code	See Page	Code	See Page
A20	D	48 (LHD)	I2	41 (*2)	J21	50 (LHD)
		68 (RHD)		61 (*11)		70 (RHD)
A21	A	48 (LHD)	I6	41 (*2)	J22	50 (LHD)
		68 (RHD)		61 (*11)		70 (RHD)
A22	B	48 (LHD)	I7	41 (*2)	J31	52 (*6)
		68 (RHD)		61 (*11)		54 (*7)
B7		48 (LHD)	I8	41 (*2)		72 (*15)
		68 (RHD)		61 (*11)		74 (*16)
C2		40 (*2)	I9	41 (*2)	K1	41 (*2)
		60 (*11)		61 (*11)		61 (*11)
C3		40 (*2)	I10	41 (*2)	N1	41 (*2)
		60 (*11)		61 (*11)		61 (*11)
C9	A	49 (LHD)	I11	41 (*2)	P1	41 (*2)
		69 (RHD)		61 (*11)		61 (*11)
C11	C	49 (LHD)	I14	50 (LHD)	S1	41 (*2)
		69 (RHD)		70 (RHD)		61 (*11)
C12	D	49 (LHD)	J2	41 (*2)	S2	41 (*2)
		69 (RHD)		61 (*11)		61 (*11)
E10	A	49 (LHD)	J5	41 (*2)	S18	51 (LHD)
		69 (RHD)		61 (*11)		71 (RHD)
E11	B	49 (LHD)	J7	50 (LHD)	T4	41 (*2)
		69 (RHD)		70 (RHD)		61 (*11)
E12	C	49 (LHD)	J9	50 (LHD)	T9	51 (LHD)
		69 (RHD)		70 (RHD)		71 (RHD)
F20	A	54 (*7)	J10	50 (LHD)	V1	41 (*2)
		74 (*16)		70 (RHD)		61 (*11)
F21	B	52 (*6)	J11	50 (LHD)	V2	41 (*2)
		72 (*15)		70 (RHD)		61 (*11)
I1		41 (*2)	J17	50 (LHD)	W3	41 (*2)
		61 (*11)		70 (RHD)		61 (*11)

: Relay Blocks

Code	See Page	Relay Blocks (Relay Block Location)
2	23	Engine Room R/B (Engine Compartment Left)

* 1 : LHD 1GR-FE * 2 : LHD 3RZ-FE * 3 : LHD 1KD-FTV * 4 : LHD 1KZ-TE * 5 : LHD 5L-E * 6 : LHD 5-Door * 7 : LHD 3-Door
* 8 : LHD 8Way Power Seat * 9 : LHD Except 8Way Power Seat * 10 : RHD 1GR-FE * 11 : RHD 3RZ-FE * 12 : RHD 1KD-FTV
* 13 : RHD 1KZ-TE * 14 : RHD 5L-E * 15 : RHD 5-Door * 16 : RHD 3-Door * 17 : RHD 8Way Power Seat
* 18 : RHD Except 8Way Power Seat

: **Junction Block and Wire Harness Connector**

Code	See Page	Junction Block and Wire Harness (Connector Location)
IE	26 (LHD)	Engine Room Main Wire and Driver Side J/B (Lower Finish Panel)
	28 (RHD)	
IG	27 (LHD)	Instrument Panel Wire and Driver Side J/B (Lower Finish Panel)
	29 (RHD)	
IJ	27 (LHD)	
	29 (RHD)	
IK	27 (LHD)	
	29 (RHD)	
IL	27 (LHD)	
	29 (RHD)	
2C	34	Instrument Panel Wire and J/B No.2 (Instrument Panel Reinforcement Center)
2D		
2E		
3B	36 (LHD)	Instrument Panel Wire and J/B No.3 (Instrument Panel Reinforcement Right)
	36 (RHD)	Instrument Panel Wire and J/B No.3 (Instrument Panel Reinforcement Left)
3C	36 (LHD)	Instrument Panel Wire and J/B No.3 (Instrument Panel Reinforcement Right)
	36 (RHD)	Instrument Panel Wire and J/B No.3 (Instrument Panel Reinforcement Left)
3D	36 (LHD)	Instrument Panel Wire and J/B No.3 (Instrument Panel Reinforcement Right)
	36 (RHD)	Instrument Panel Wire and J/B No.3 (Instrument Panel Reinforcement Left)
3E	36 (LHD)	Instrument Panel Wire and J/B No.3 (Instrument Panel Reinforcement Right)
	36 (RHD)	Instrument Panel Wire and J/B No.3 (Instrument Panel Reinforcement Left)

: **Connector Joining Wire Harness and Wire Harness**

Code	See Page	Joining Wire Harness and Wire Harness (Connector Location)
IB1	88 (LHD)	Floor No.2 Wire and Engine Room Main Wire (Left Kick Panel)
	112 (RHD)	
IC4	88 (LHD)	Instrument Panel Wire and Engine Room Main Wire (Left Kick Panel)
	112 (RHD)	
IF1	90 (LHD)	Instrument Panel Wire and Instrument Panel Wire (Near the J/B No.1)
	114 (RHD)	
IL1	92 (LHD)	Engine Wire and Instrument Panel Wire (Right Side of the Blower Unit)
	116 (RHD)	Engine Wire and Instrument Panel Wire (Left Side of the Blower Unit)
IL2	92 (LHD)	Engine Wire and Instrument Panel Wire (Right Side of the Blower Unit)
	116 (RHD)	Engine Wire and Instrument Panel Wire (Left Side of the Blower Unit)
IL3	92 (LHD)	Engine Wire and Instrument Panel Wire (Right Side of the Blower Unit)
	116 (RHD)	Engine Wire and Instrument Panel Wire (Left Side of the Blower Unit)
IM1	92 (LHD)	Instrument Panel Wire and Engine Room Main Wire (Right Kick Panel)
	116 (RHD)	
IM4	92 (LHD)	
IM5	92 (LHD)	
	116 (RHD)	

▽ : **Ground Points**

Code	See Page	Ground Points Location
EB	80 (*2)	Front Left Fender
	104 (*11)	
ED	80 (*2)	Ignition Coil Bracket
	104 (*11)	
EE	80 (*2)	Intake Manifold
	104 (*11)	
BR	96 (*6)	Left Quarter Panel Inner
	100 (*7)	
	120 (*15)	
	124 (*16)	

⬡ : **Splice Points**

Code	See Page	Wire Harness with Splice Points	Code	See Page	Wire Harness with Splice Points
E3	80 (*2)	Engine Wire	E11	104 (*11)	Engine Wire
	104 (*11)		I8	90 (LHD)	
E11	80 (*2)			114 (RHD)	

* 1 : LHD 1GR-FE * 2 : LHD 3RZ-FE * 3 : LHD 1KD-FTV * 4 : LHD 1KZ-TE * 5 : LHD 5L-E * 6 : LHD 5-Door * 7 : LHD 3-Door
* 8 : LHD 8Way Power Seat * 9 : LHD Except 8Way Power Seat * 10 : RHD 1GR-FE * 11 : RHD 3RZ-FE * 12 : RHD 1KD-FTV
* 13 : RHD 1KZ-TE * 14 : RHD 5L-E * 15 : RHD 5-Door * 16 : RHD 3-Door * 17 : RHD 8Way Power Seat
* 18 : RHD Except 8Way Power Seat

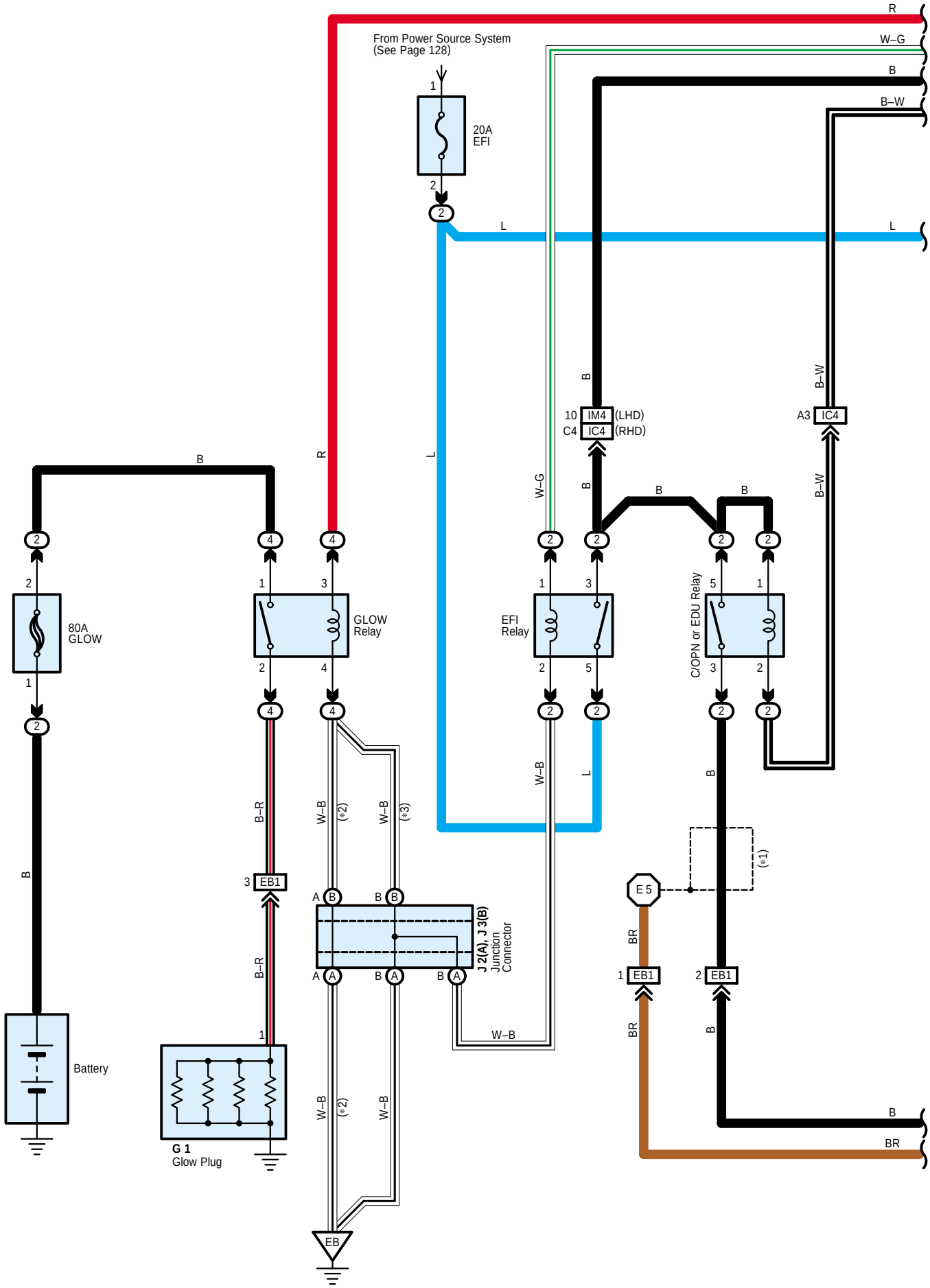
From Power Source System
(See Page 128)
20A
EFI
80A
GLOW
GLOW
Relay
EFI
Relay
C/OPN or EDU Relay
10 IM4 (LHD)
C4 IC4 (RHD)
A3 IC4
3 EB1
1 EB1
2 EB1
E 5
J 2(A), J 3(B)
Junction
Connector
Battery
G 1
Glow Plug
EB
(*1)
(*2)
(*3)
R
W–G
B
B–W
L
B–R
W–B
BR

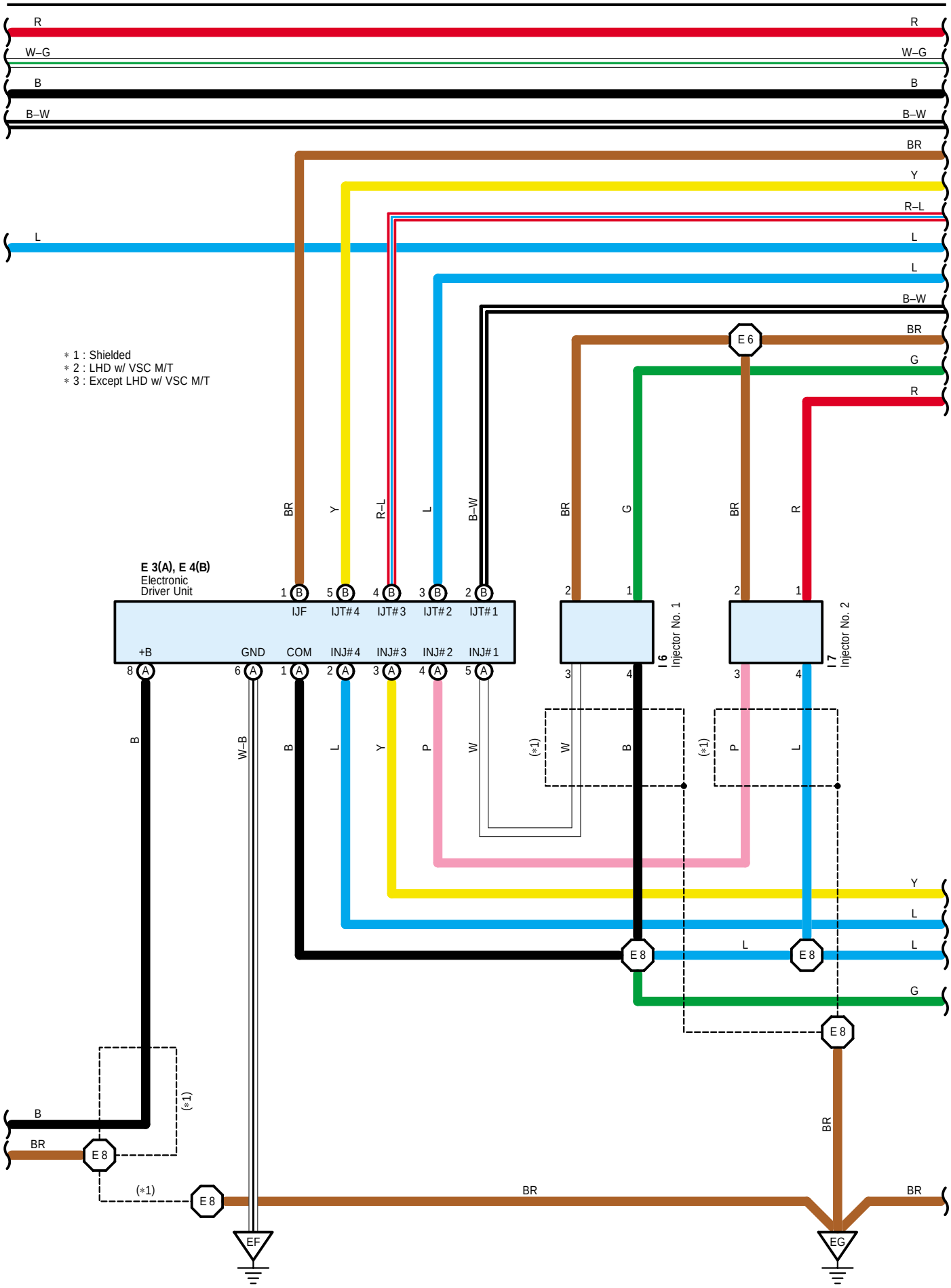
R
W–G
B
B–W
BR
Y
R–L
L
G
* 1 : Shielded
* 2 : LHD w/ VSC M/T
* 3 : Except LHD w/ VSC M/T
E 3(A), E 4(B)
Electronic
Driver Unit
IJF
IJT#4
IJT#3
IJT#2
IJT#1
+B
GND
COM
INJ#4
INJ#3
INJ#2
INJ#1
I 6
Injector No. 1
I 7
Injector No. 2
E 6
E 8
EF
EG
(*1)
W–B
P
W

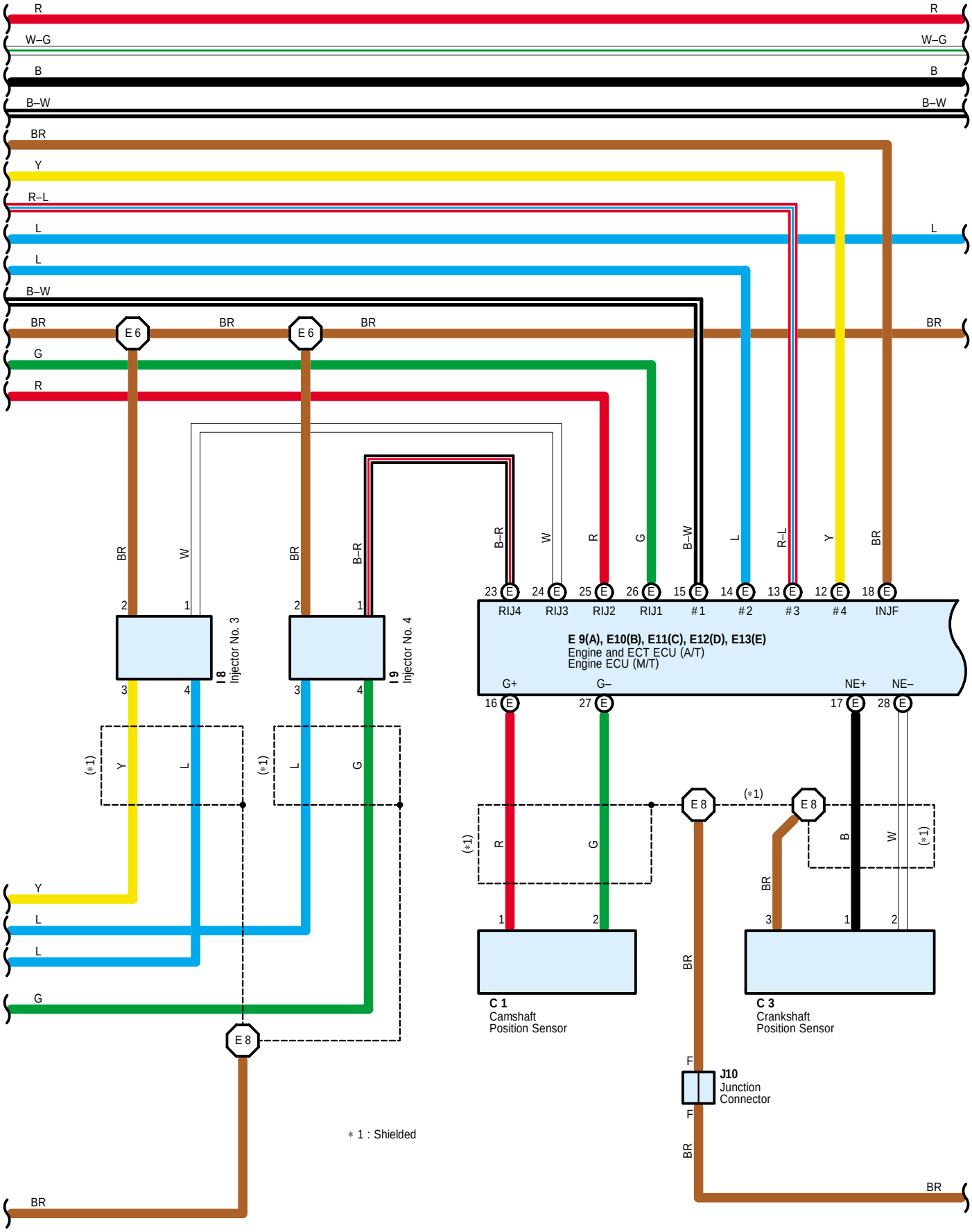
R
W–G
B
B–W
BR
Y
R–L
L
G
E 6
E 8
I 8
Injector No. 3
I 9
Injector No. 4
B–R
W
23 RIJ4
24 RIJ3
25 RIJ2
26 RIJ1
15 #1
14 #2
13 #3
12 #4
18 INJF
E 9(A), E10(B), E11(C), E12(D), E13(E)
Engine and ECT ECU (A/T)
Engine ECU (M/T)
G+
G–
NE+
NE–
16
27
17
28
(*1)
C 1
Camshaft
Position Sensor
C 3
Crankshaft
Position Sensor
J10
Junction
Connector
F
* 1 : Shielded

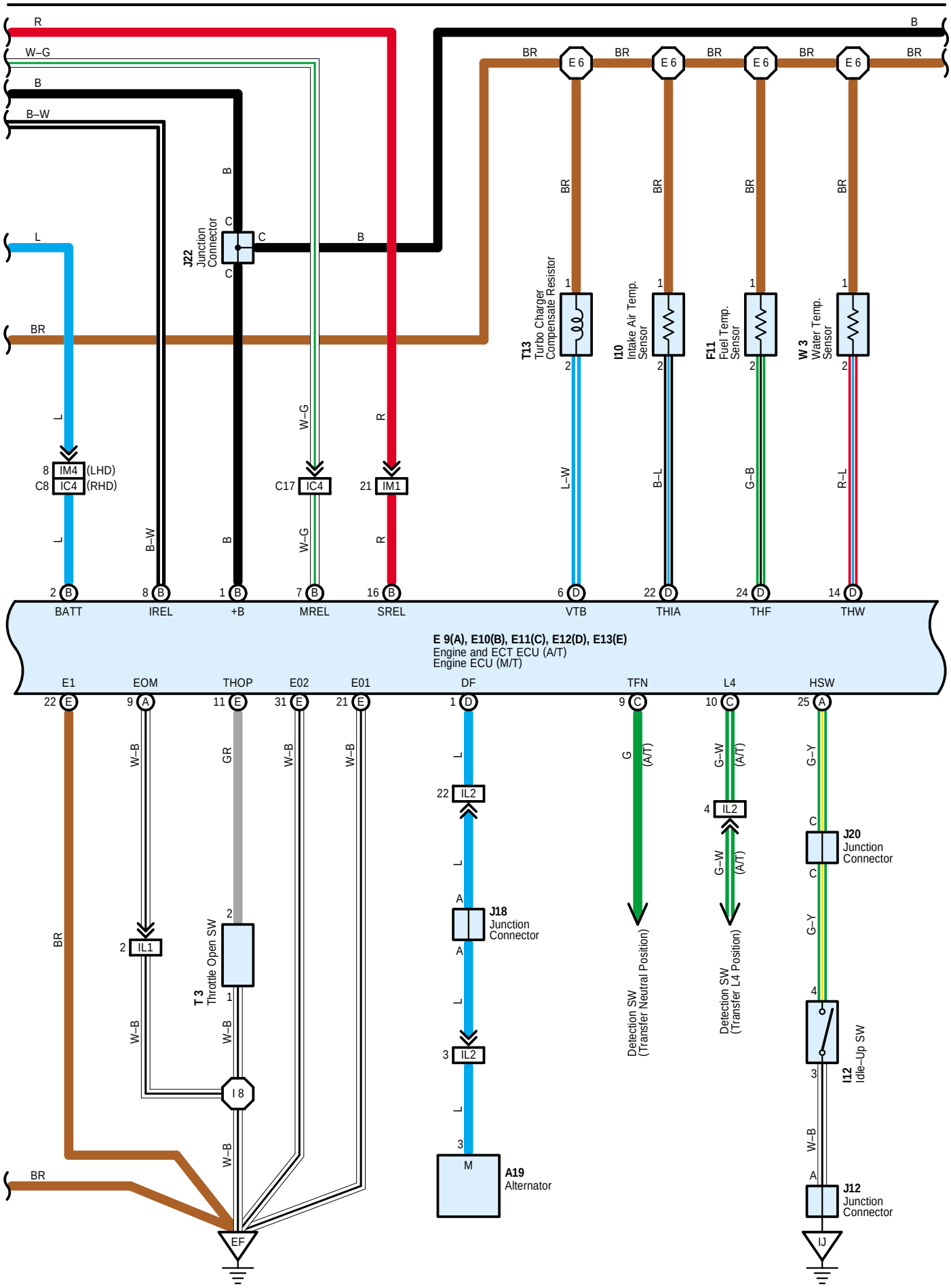
R
W–G
B
B–W
L
BR
J22
Junction
Connector
C
B
E 6
T13
Turbo Charger
Compensate Resistor
I10
Intake Air Temp.
Sensor
F11
Fuel Temp.
Sensor
W 3
Water Temp.
Sensor
L–W
B–L
G–B
R–L
8 IM4 (LHD)
C8 IC4 (RHD)
C17 IC4
21 IM1
2 B BATT
8 B IREL
1 B +B
7 B MREL
16 B SREL
6 D VTB
22 D THIA
24 D THF
14 D THW
E 9(A), E10(B), E11(C), E12(D), E13(E)
Engine and ECT ECU (A/T)
Engine ECU (M/T)
E1
EOM
THOP
E02
E01
DF
TFN
L4
HSW
22 E
9 A
11 E
31 E
21 E
1 D
9 C
10 C
25 A
2 IL1
T 3
Throttle Open SW
I 8
22 IL2
J18
Junction
Connector
3 IL2
M
A19
Alternator
Detection SW
(Transfer Neutral Position)
Detection SW
(Transfer L4 Position)
4 IL2
J20
Junction
Connector
I12
Idle–Up SW
J12
Junction
Connector
EF
IJ

Engine Control (1KD-FTV)

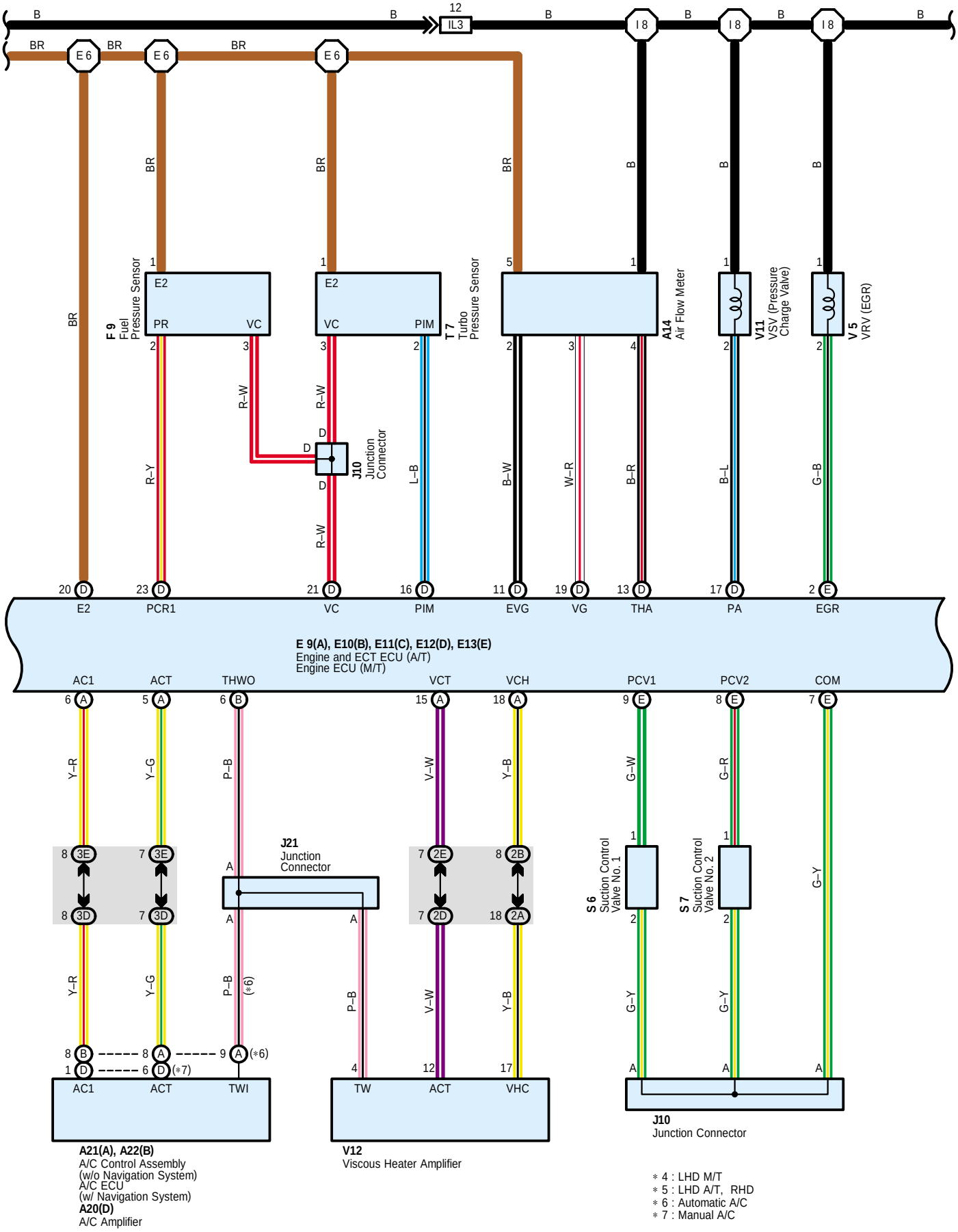

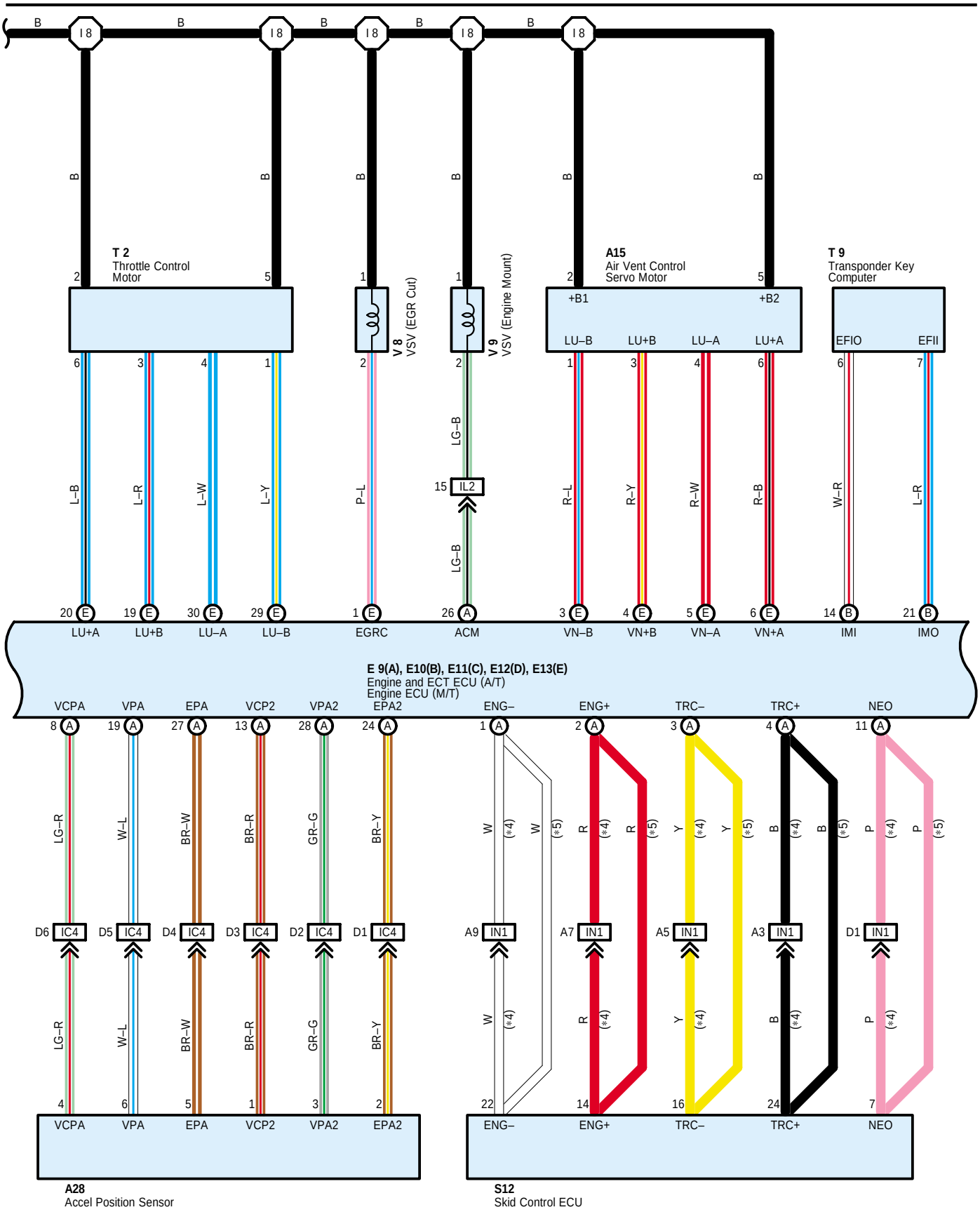
T 2
Throttle Control Motor
V 8
VSV (EGR Cut)
V 9
VSV (Engine Mount)
A15
Air Vent Control Servo Motor
T 9
Transponder Key Computer
+B1
+B2
LU–B
LU+B
LU–A
LU+A
EFIO
EFII
IL2
LU+A
LU+B
LU–A
LU–B
EGRC
ACM
VN–B
VN+B
VN–A
VN+A
IMI
IMO
E 9(A), E10(B), E11(C), E12(D), E13(E)
Engine and ECT ECU (A/T)
Engine ECU (M/T)
VCPA
VPA
EPA
VCP2
VPA2
EPA2
ENG–
ENG+
TRC–
TRC+
NEO
IC4
IN1
A28
Accel Position Sensor
S12
Skid Control ECU

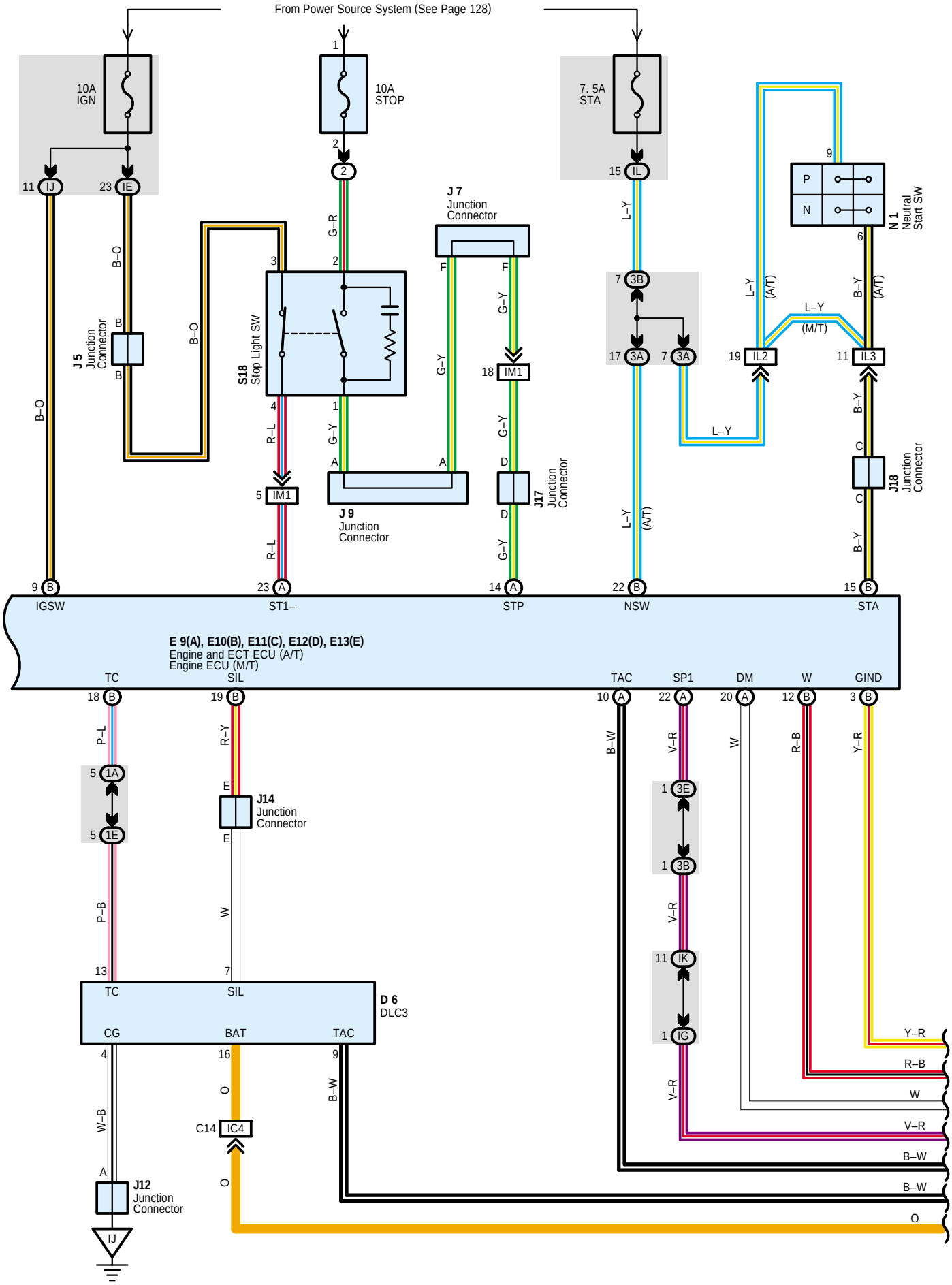
From Power Source System (See Page 128)
10A IGN
10A STOP
7. 5A STA
J 7 Junction Connector
J 5 Junction Connector
S18 Stop Light SW
J 9 Junction Connector
J17 Junction Connector
J18 Junction Connector
N 1 Neutral Start SW
IGSW
ST1–
STP
NSW
STA
E 9(A), E10(B), E11(C), E12(D), E13(E)
Engine and ECT ECU (A/T)
Engine ECU (M/T)
TC
SIL
TAC
SP1
DM
W
GIND
J14 Junction Connector
D 6 DLC3
CG
BAT
C14 IC4
J12 Junction Connector

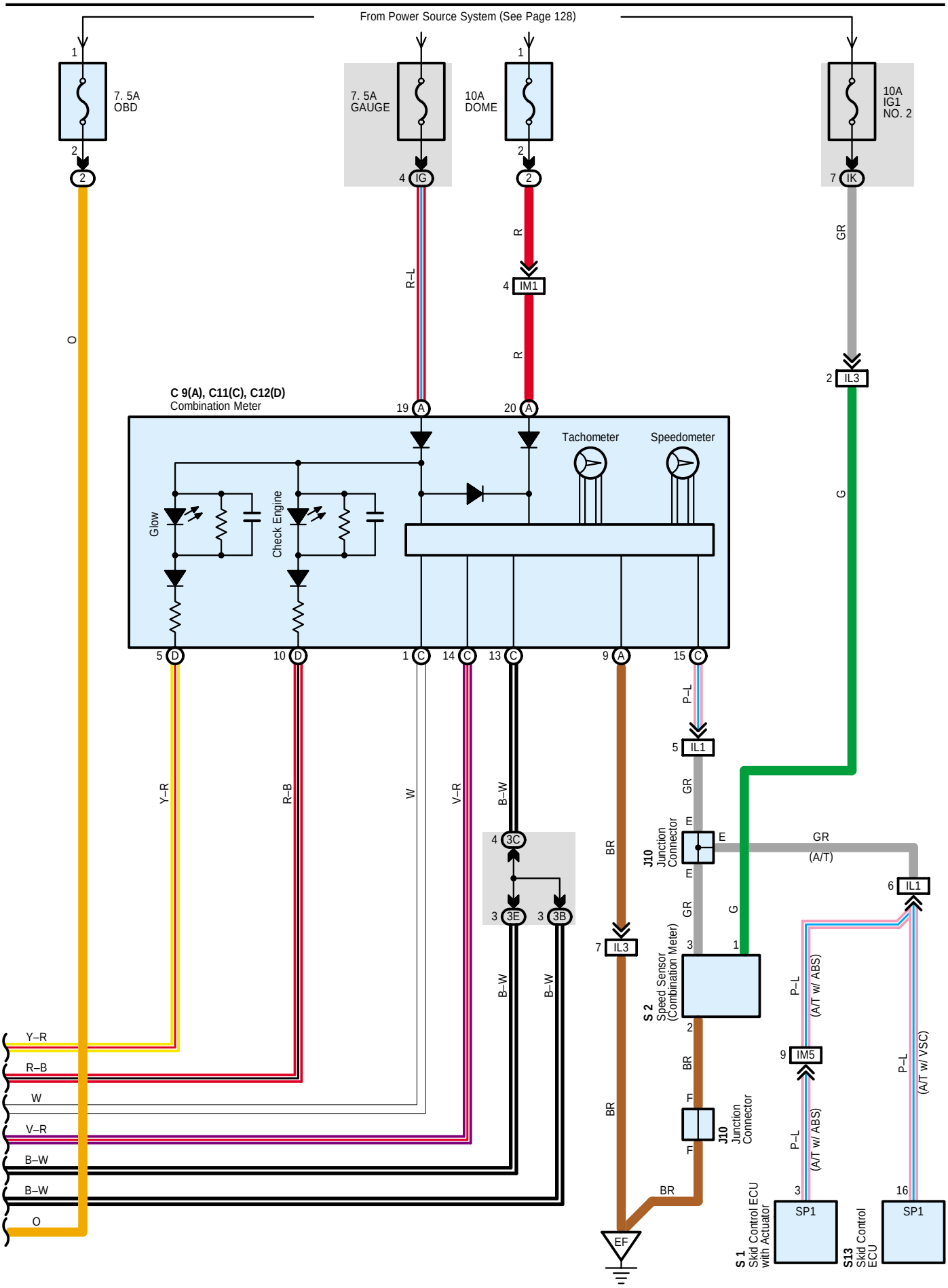
From Power Source System (See Page 128)
7. 5A
OBD
7. 5A
GAUGE
10A
DOME
10A
IG1
NO. 2
C 9(A), C11(C), C12(D)
Combination Meter
Tachometer
Speedometer
Glow
Check Engine
IM1
IL3
IL1
IM5
J10
Junction
Connector
S 2
Speed Sensor
(Combination Meter)
S 1
Skid Control ECU
with Actuator
S13
Skid Control
ECU
SP1
EF
(A/T)
(A/T w/ ABS)
(A/T w/ VSC)

System Outline

The engine control system utilizes a microcomputer and maintains overall control of the engine, transmission etc. An outline of the engine control is given here.

1. Input Signals

(1) Engine coolant temp. signal circuit
The water temp. sensor detects the engine coolant temp. and has a built–in thermistor with a resistance which varies according to the engine coolant temp. The engine coolant temp. is input into TERMINAL THW of the engine and ECT ECU (A/T), engine ECU (M/T) as a control signal.

(2) Intake air temp. signal circuit
The intake air temp. sensor is installed in the air flow meter and detects the intake air temp., which is input as a control signal to TERMINAL THA of the engine and ECT ECU (A/T), engine ECU (M/T).

(3) RPM signal circuit
The camshaft position is detected by the camshaft position sensor and is input into TERMINAL G+ of the engine and ECT ECU (A/T), engine ECU (M/T) as a control signal. Also, the engine RPM is detected by the crankshaft position sensor and the signal is input into TERMINAL NE+ of the engine and ECT ECU (A/T), engine ECU (M/T).

(4) Throttle signal circuit
The accerelator pedal position sensor detects the accerelator pedal opening angle as a control signal, which is input into TERMINALS VPA1 and VPA2 of the engine and ECT ECU (A/T), engine ECU (M/T).

(5) Vehicle speed circuit
The speed sensor detects the vehicle speed, and the signal is input into TERMINAL SP1 of the engine and ECT ECU (A/T), engine ECU (M/T) via the combination meter.

(6) Battery signal circuit
Voltage is constantly applied to TERMINAL BATT of the engine and ECT ECU (A/T), engine ECU (M/T). When the ignition SW is turned on, the voltage for engine and ECT ECU (A/T), engine ECU (M/T) start up power supply is applied through the EFI relay, to TERMINAL +B of the engine and ECT ECU (A/T), engine ECU (M/T). The current from the IGN fuse flows to TERMINAL IGSW of the engine and ECT ECU (A/T), engine ECU (M/T).

(7) Intake air volume signal circuit
The intake air volume is detected by the air flow meter, and is input as a control signal to TERMINAL VG of the engine and ECT ECU (A/T), engine ECU (M/T).

(8) Stop light SW signal circuit
The stop light SW is used to detect whether the vehicle is braking or not, and the signal is input into TERMINAL STP of the engine and ECT ECU (A/T), engine ECU (M/T) as a control signal.

(9) Starter signal circuit
To confirm whether the engine is cranking, the voltage applied to the starter motor when the engine is cranking is detected, and is input into TERMINAL STA of the engine and ECT ECU (A/T), engine ECU (M/T) as a control signal.

(10) A/C SW signal system
The operating voltage of the A/C control assembly (Automatic A/C), A/C amplifier (Manual A/C) is detected and input in the form of a control signal to TERMINAL AC1 of the engine and ECT ECU (A/T), engine ECU (M/T).

(11) Intake air vacuum pressure signal circuit
Intake air vacuum pressure is detect by the turbo pressure sensor and is input as a control signal to TERMINAL PIM of the engine and ECT ECU (A/T), engine ECU (M/T).

2. Control System

∗ GLOW relay control system

When the engine starts, the GLOW relay is controlled in response to engine coolant temp. At that time, the engine and ECT ECU (A/T), engine ECU (M/T) receives the signals (input signals (1, 3, 9)), and the current is output to the TERMINALS SREL and GIND.

As a result, the engine and ECT ECU (A/T), engine ECU (M/T) controls the GLOW relay and makes the glow indicator light come on.

∗ EGR control system

The EGR control system detects the signals from each sensors (Input signals (1, 3, 4, 11)), then the current is output to the TERMINAL EGR to control the VRV (EGR).

∗ A/C cut control system

When the vehicle suddenly accelerates from low engine speed, this system cuts off air conditioner operation for a fixed period of time in response to the vehicle speed, throttle valve opening angle and intake manifold pressure in order to maintain acceleration performance.

The engine and ECT ECU (A/T), engine ECU (M/T) receives input signals (3, 4, 5, 10, and 11), and outputs signals to TERMINAL ACT.

3. Diagnosis System

When the diagnosis system, when there is a malfunctioning in the engine and ECT ECU (A/T), engine ECU (M/T) signal system, the malfunction system is recorded in the memory. The malfunctioning system can be found by reading the display (Code) of the check engine warning light.

4. Fail-Safe System

When a malfunction occurs in any system, if there is a possibility of engine trouble being caused by continued control based on the signals from that system, the fail-safe system either controls the system by using data (Standard values) recorded in the engine and ECT ECU (A/T), engine ECU (M/T) memory or else stops the engine.

Service Hints

EFI Relay

5-3 : Closed with the ignition SW at ON position

W3 Water Temp. Sensor

1-2 : Approx. 15.0 kΩ (-20°C, -4°F)
: Approx. 2.45 kΩ (20°C, 68°F)
: Approx. 0.32 kΩ (80°C, 176°F)
: Approx. 0.14 kΩ (110°C, 230°F)

E9 (A), E10 (B), E11 (C), E12 (D), E13 (E) Engine and ECT ECU (A/T), Engine ECU (M/T)

BATT-E1 : Always 9.0-14.0 volts
IGSW-E1 : 9.0-14.0 volts with the ignition SW at ON position
+B-E1 : 9.0-14.0 volts with the ignition SW at ON position
VC-E1 : 4.5-5.5 volts with the ignition SW at ON position
VPA-E1 : 0.3-0.9 volts with the ignition SW on and throttle valve fully closed
: 3.2-4.8 volts with the ignition SW on and throttle valve fully open
VPA2-E1 : 1.8-2.7 volts with the ignition SW on and throttle valve fully closed
: 4.7-5.1 volts with the ignition SW on and throttle valve fully open
THA-E1 : 0.5-3.4 volts with the idling, intake air temp. 0°C (32°F) -80°C (176°F)
THW-E1 : 0.2-1.0 volts with the idling, engine coolant temp. 60°C (140°F) -120°C (248°F)
STA-E1 : 6.0 volts or more with the engine cranking
W-E1 : 9.0-14.0 volts with the idling and check engine warning light off
SP1-E1 : Pulse generation with the vehicle moving
STP-E1 : 7.5-14.0 volts with the brake pedal depressed

○ : **Parts Location**

Code		See Page	Code		See Page	Code	See Page
A14		42 (*3)	F9		62 (*12)	J22	50 (LHD)
		62 (*12)	F11		42 (*3)		70 (RHD)
A15		42 (*3)			62 (*12)	N1	43 (*3)
		62 (*12)	G1		42 (*3)		63 (*12)
A19		42 (*3)			62 (*12)	S1	43 (*3)
		62 (*12)	I6		43 (*3)		63 (*12)
A20	D	48 (LHD)			63 (*12)	S2	43 (*3)
		68 (RHD)	I7		43 (*3)		63 (*12)
A21	A	48 (LHD)			63 (*12)	S6	43 (*3)
		68 (RHD)	I8		43 (*3)		63 (*12)
A22	B	48 (LHD)			63 (*12)	S7	43 (*3)
		68 (RHD)	I9		43 (*3)		63 (*12)
A28		48 (LHD)			63 (*12)	S12	51 (LHD)
		68 (RHD)	I10		43 (*3)		71 (RHD)
C1		42 (*3)			63 (*12)	S13	51 (LHD)
		62 (*12)	I12		50 (LHD)		71 (RHD)
C3		42 (*3)			70 (RHD)	S18	51 (LHD)
		62 (*12)	J2	A	43 (*3)		71 (RHD)
C9	A	49 (LHD)			63 (*12)	T2	43 (*3)
		69 (RHD)	J3	B	43 (*3)		63 (*12)
C11	C	49 (LHD)			63 (*12)	T3	43 (*3)
		69 (RHD)	J5		43 (*3)		63 (*12)
C12	D	49 (LHD)			63 (*12)	T7	43 (*3)
		69 (RHD)	J7		50 (LHD)		63 (*12)
D6		49 (LHD)			70 (RHD)	T9	51 (LHD)
		69 (RHD)	J9		50 (LHD)		71 (RHD)
E3	A	42 (*3)			70 (RHD)	T13	43 (*3)
		62 (*12)	J10		50 (LHD)		63 (*12)
E4	B	42 (*3)			70 (RHD)	V5	43 (*3)
		62 (*12)	J12		50 (LHD)		63 (*12)
E9	A	49 (LHD)			70 (RHD)	V8	43 (*3)
		69 (RHD)	J14		50 (LHD)		63 (*12)
E10	B	49 (LHD)			70 (RHD)	V9	43 (*3)
		69 (RHD)	J17		50 (LHD)		63 (*12)
E11	C	49 (LHD)			70 (RHD)	V11	43 (*3)
		69 (RHD)	J18		50 (LHD)		63 (*12)
E12	D	49 (LHD)			70 (RHD)	V12	51 (LHD)
		69 (RHD)	J20		50 (LHD)		71 (RHD)
E13	E	49 (LHD)			70 (RHD)	W3	43 (*3)
		69 (RHD)	J21		50 (LHD)		63 (*12)
F9		42 (*3)			70 (RHD)		

▭ : **Relay Blocks**

Code	See Page	Relay Blocks (Relay Block Location)
2	23	Engine Room R/B (Engine Compartment Left)
4	25	Engine Room R/B No.4 (Engine Compartment Left)

* 1 : LHD 1GR-FE * 2 : LHD 3RZ-FE * 3 : LHD 1KD-FTV * 4 : LHD 1KZ-TE * 5 : LHD 5L-E * 6 : LHD 5-Door * 7 : LHD 3-Door
* 8 : LHD 8Way Power Seat * 9 : LHD Except 8Way Power Seat * 10 : RHD 1GR-FE * 11 : RHD 3RZ-FE * 12 : RHD 1KD-FTV
* 13 : RHD 1KZ-TE * 14 : RHD 5L-E * 15 : RHD 5-Door * 16 : RHD 3-Door * 17 : RHD 8Way Power Seat
* 18 : RHD Except 8Way Power Seat

: **Junction Block and Wire Harness Connector**

Code	See Page	Junction Block and Wire Harness (Connector Location)
IE	26 (LHD)	Engine Room Main Wire and Driver Side J/B (Lower Finish Panel)
	28 (RHD)	
IG	27 (LHD)	Instrument Panel Wire and Driver Side J/B (Lower Finish Panel)
	29 (RHD)	
IJ	27 (LHD)	
	29 (RHD)	
IK	27 (LHD)	
	29 (RHD)	
IL	27 (LHD)	
	29 (RHD)	
1A	32 (LHD)	Instrument Panel Wire and J/B No.1 (Instrument Panel Reinforcement Left)
	32 (RHD)	Instrument Panel Wire and J/B No.1 (Instrument Panel Reinforcement Right)
1E	32 (LHD)	Instrument Panel Wire and J/B No.1 (Instrument Panel Reinforcement Left)
	32 (RHD)	Instrument Panel Wire and J/B No.1 (Instrument Panel Reinforcement Right)
2A	34	Instrument Panel Wire and J/B No.2 (Instrument Panel Reinforcement Center)
2B		
2D		
2E		
3A	36 (LHD)	Instrument Panel Wire and J/B No.3 (Instrument Panel Reinforcement Right)
	36 (RHD)	Instrument Panel Wire and J/B No.3 (Instrument Panel Reinforcement Left)
3B	36 (LHD)	Instrument Panel Wire and J/B No.3 (Instrument Panel Reinforcement Right)
	36 (RHD)	Instrument Panel Wire and J/B No.3 (Instrument Panel Reinforcement Left)
3C	36 (LHD)	Instrument Panel Wire and J/B No.3 (Instrument Panel Reinforcement Right)
	36 (RHD)	Instrument Panel Wire and J/B No.3 (Instrument Panel Reinforcement Left)
3D	36 (LHD)	Instrument Panel Wire and J/B No.3 (Instrument Panel Reinforcement Right)
	36 (RHD)	Instrument Panel Wire and J/B No.3 (Instrument Panel Reinforcement Left)
3E	36 (LHD)	Instrument Panel Wire and J/B No.3 (Instrument Panel Reinforcement Right)
	36 (RHD)	Instrument Panel Wire and J/B No.3 (Instrument Panel Reinforcement Left)

: **Connector Joining Wire Harness and Wire Harness**

Code	See Page	Joining Wire Harness and Wire Harness (Connector Location)
EB1	82 (*3)	Engine Room Main Wire and Engine Wire (Rear Side of the Engine Room R/B)
	106 (*12)	
IC4	88 (LHD)	Instrument Panel Wire and Engine Room Main Wire (Left Kick Panel)
	112 (RHD)	
IL1	92 (LHD)	Engine Wire and Instrument Panel Wire (Right Side of the Blower Unit)
	116 (RHD)	Engine Wire and Instrument Panel Wire (Left Side of the Blower Unit)
IL2	92 (LHD)	Engine Wire and Instrument Panel Wire (Right Side of the Blower Unit)
	116 (RHD)	Engine Wire and Instrument Panel Wire (Left Side of the Blower Unit)
IL3	92 (LHD)	Engine Wire and Instrument Panel Wire (Right Side of the Blower Unit)
	116 (RHD)	Engine Wire and Instrument Panel Wire (Left Side of the Blower Unit)
IM1	92 (LHD)	Instrument Panel Wire and Engine Room Main Wire (Right Kick Panel)
	116 (RHD)	
IM4	92 (LHD)	
IM5	92 (LHD)	
	116 (RHD)	
IN1	94 (LHD)	Instrument Panel Wire and Floor Wire (Right Kick Panel)

* 1 : LHD 1GR-FE * 2 : LHD 3RZ-FE * 3 : LHD 1KD-FTV * 4 : LHD 1KZ-TE * 5 : LHD 5L-E * 6 : LHD 5-Door * 7 : LHD 3-Door
* 8 : LHD 8Way Power Seat * 9 : LHD Except 8Way Power Seat * 10 : RHD 1GR-FE * 11 : RHD 3RZ-FE * 12 : RHD 1KD-FTV
* 13 : RHD 1KZ-TE * 14 : RHD 5L-E * 15 : RHD 5-Door * 16 : RHD 3-Door * 17 : RHD 8Way Power Seat
* 18 : RHD Except 8Way Power Seat

▽ : **Ground Points**

Code	See Page	Ground Points Location
EB	82 (*3)	Front Left Fender
	106 (*12)	
EF	82 (*3)	Rear Part of Cylinder Block
	106 (*12)	
EG	82 (*3)	Near the Engine Room R/B
	106 (*12)	
IJ	88 (LHD)	Left Kick Panel
	112 (RHD)	Right Kick Panel

◯ : **Splice Points**

Code	See Page	Wire Harness with Splice Points	Code	See Page	Wire Harness with Splice Points
E5	82 (*3)	Engine Room Main Wire	E8	82 (*3)	Engine Wire
	106 (*12)			106 (*12)	
E6	82 (*3)	Engine Wire	I8	90 (LHD)	
	106 (*12)			114 (RHD)	

* 1 : LHD 1GR-FE * 2 : LHD 3RZ-FE * 3 : LHD 1KD-FTV * 4 : LHD 1KZ-TE * 5 : LHD 5L-E * 6 : LHD 5-Door * 7 : LHD 3-Door
* 8 : LHD 8Way Power Seat * 9 : LHD Except 8Way Power Seat * 10 : RHD 1GR-FE * 11 : RHD 3RZ-FE * 12 : RHD 1KD-FTV
* 13 : RHD 1KZ-TE * 14 : RHD 5L-E * 15 : RHD 5-Door * 16 : RHD 3-Door * 17 : RHD 8Way Power Seat
* 18 : RHD Except 8Way Power Seat

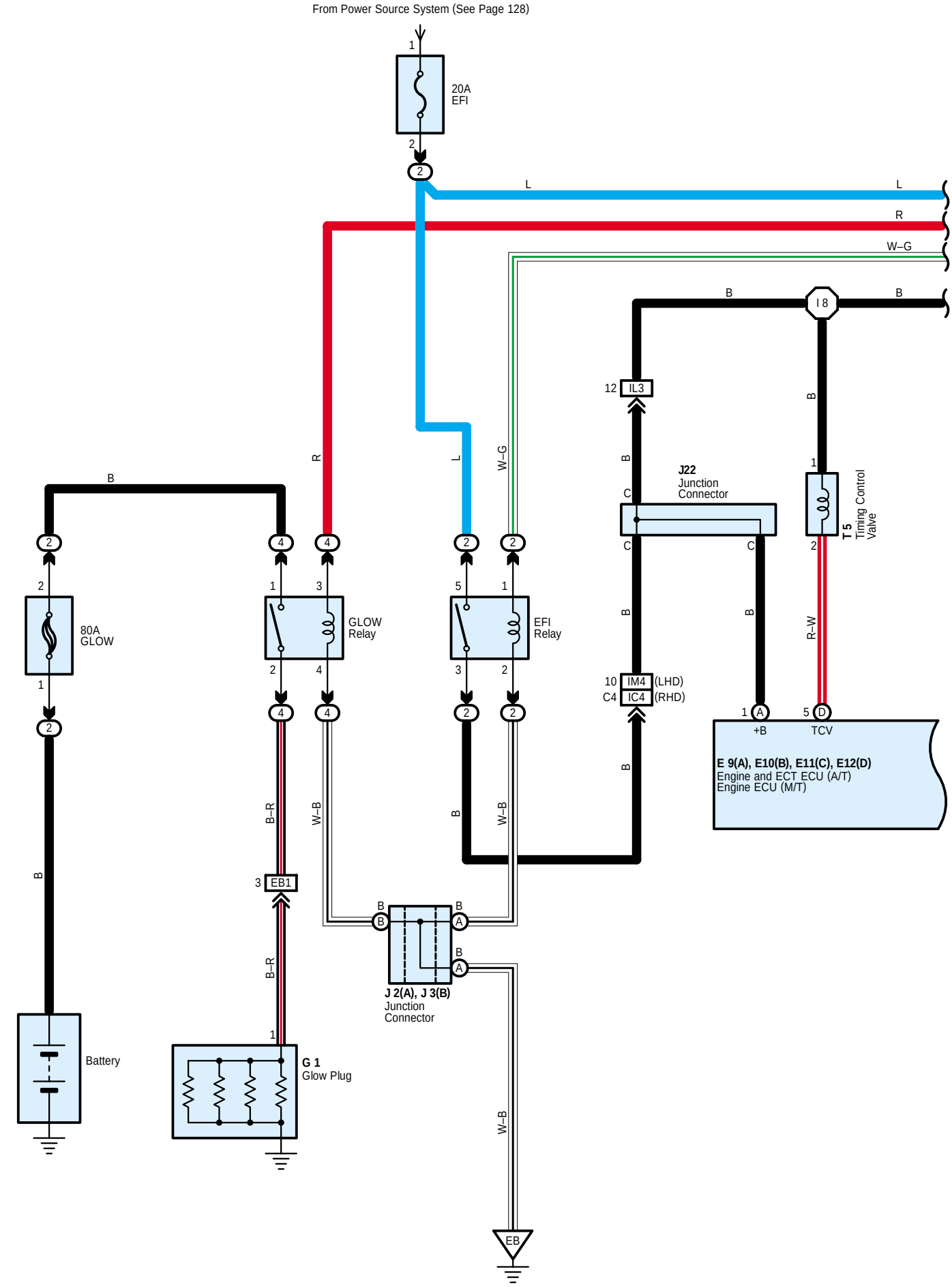
From Power Source System (See Page 128)
20A
EFI
L
R
W–G
B
I 8
12 IL3
J22
Junction
Connector
T 5
Timing Control
Valve
80A
GLOW
GLOW
Relay
EFI
Relay
10 IM4 (LHD)
C4 IC4 (RHD)
+B
TCV
E 9(A), E10(B), E11(C), E12(D)
Engine and ECT ECU (A/T)
Engine ECU (M/T)
B–R
W–B
R–W
3 EB1
J 2(A), J 3(B)
Junction
Connector
Battery
G 1
Glow Plug
EB

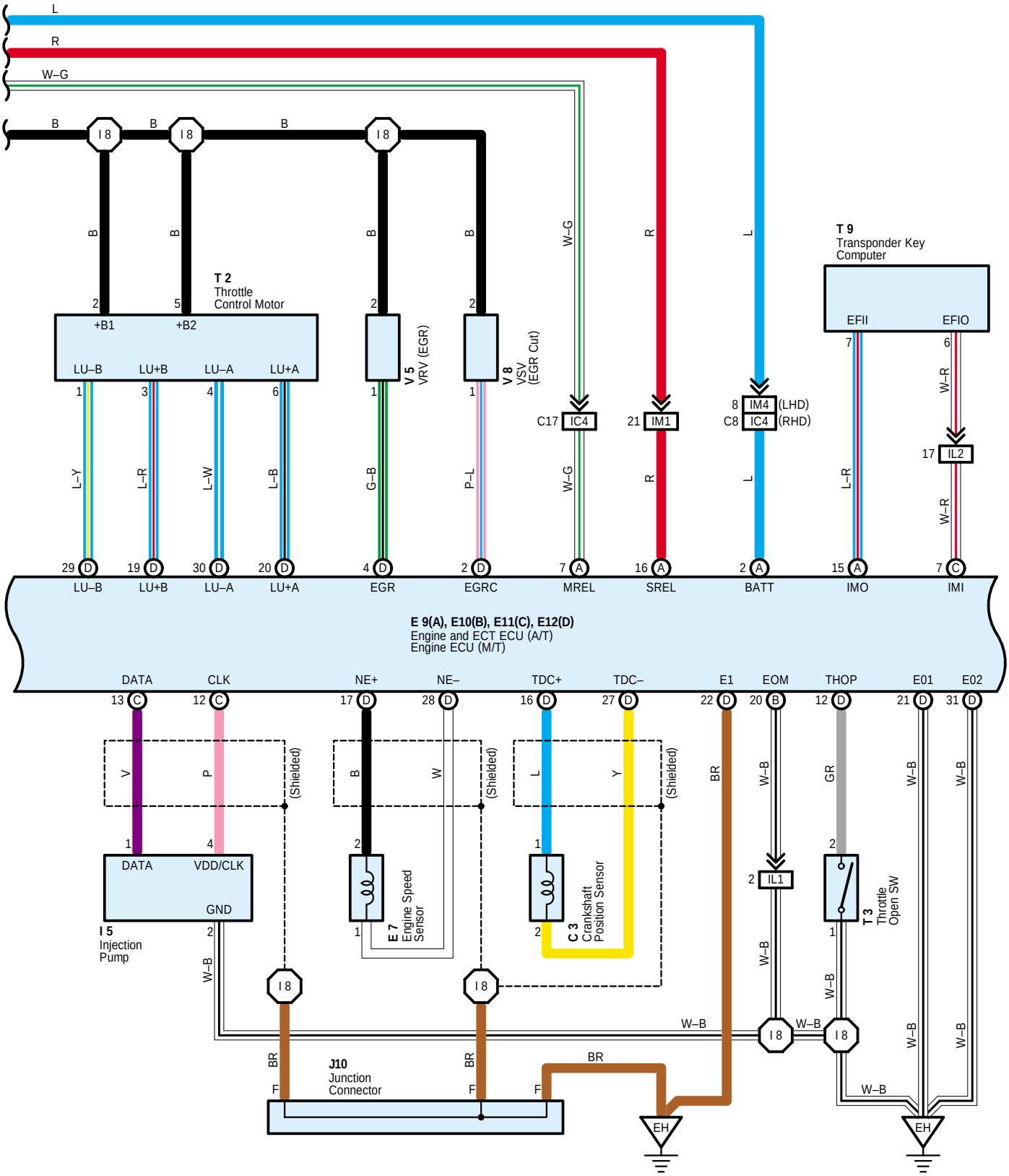
T 2
Throttle
Control Motor
+B1
+B2
LU–B
LU+B
LU–A
LU+A
V 5
VRV (EGR)
V 8
VSV
(EGR Cut)
C17 IC4
21 IM1
8 IM4 (LHD)
C8 IC4 (RHD)
T 9
Transponder Key
Computer
EFII
EFIO
17 IL2
E 9(A), E10(B), E11(C), E12(D)
Engine and ECT ECU (A/T)
Engine ECU (M/T)
DATA
CLK
NE+
NE–
TDC+
TDC–
E1
EOM
THOP
E01
E02
EGR
EGRC
MREL
SREL
BATT
IMO
IMI
(Shielded)
I 5
Injection
Pump
VDD/CLK
GND
E 7
Engine Speed
Sensor
C 3
Crankshaft
Position Sensor
IL1
T 3
Throttle
Open SW
J10
Junction
Connector
EH

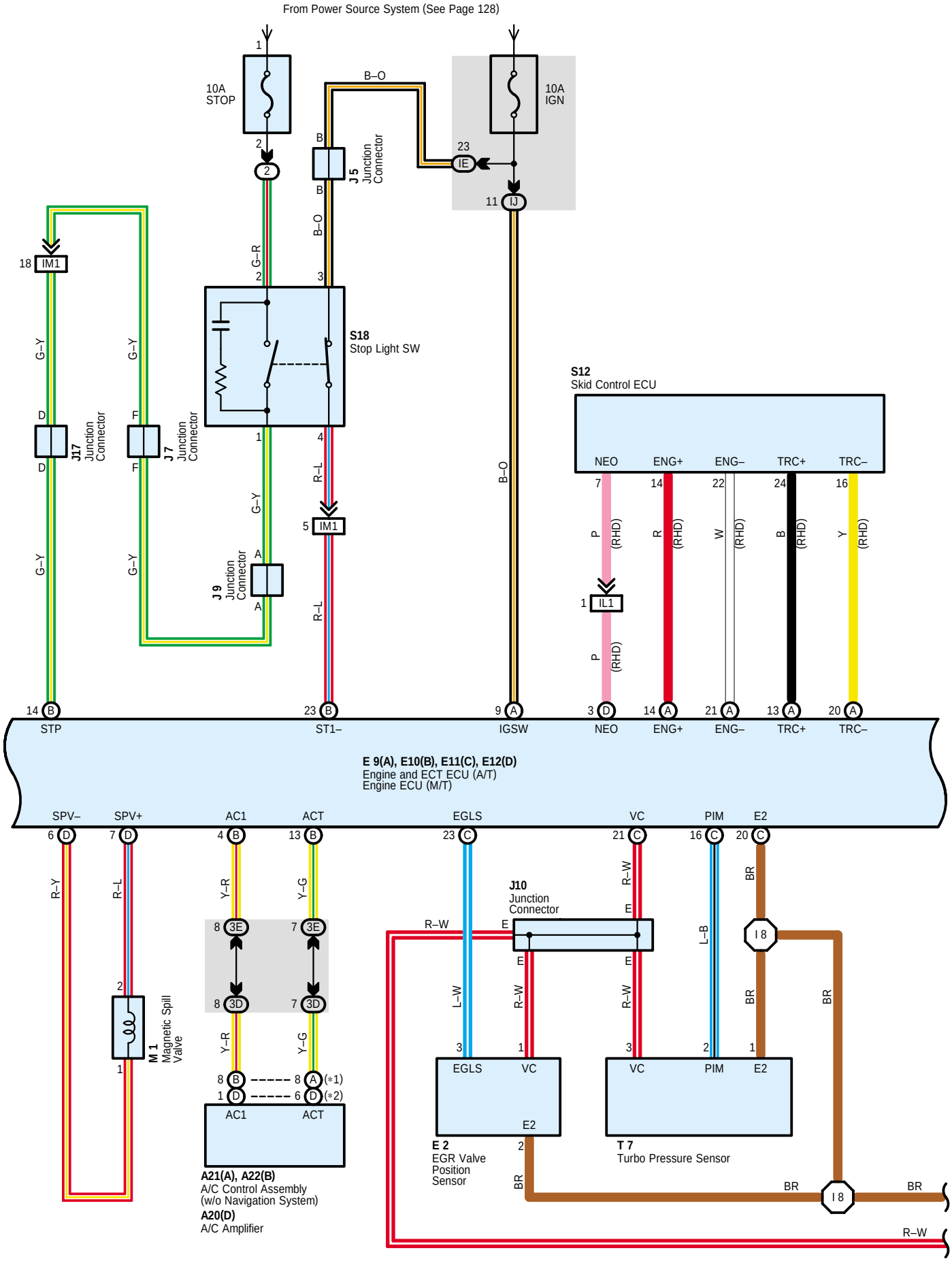
From Power Source System (See Page 128)
10A STOP
10A IGN
B–O
J 5 Junction Connector
IE
IJ
IM1
G–Y
G–R
S18 Stop Light SW
J17 Junction Connector
J 7 Junction Connector
J 9 Junction Connector
R–L
S12 Skid Control ECU
NEO
ENG+
ENG–
TRC+
TRC–
P (RHD)
R (RHD)
W (RHD)
B (RHD)
Y (RHD)
IL1
STP
ST1–
IGSW
E 9(A), E10(B), E11(C), E12(D)
Engine and ECT ECU (A/T)
Engine ECU (M/T)
SPV–
SPV+
AC1
ACT
EGLS
VC
PIM
E2
R–Y
Y–R
Y–G
3E
3D
M 1 Magnetic Spill Valve
A21(A), A22(B)
A/C Control Assembly
(w/o Navigation System)
A20(D)
A/C Amplifier
J10 Junction Connector
R–W
L–W
L–B
BR
I 8
E 2 EGR Valve Position Sensor
T 7 Turbo Pressure Sensor

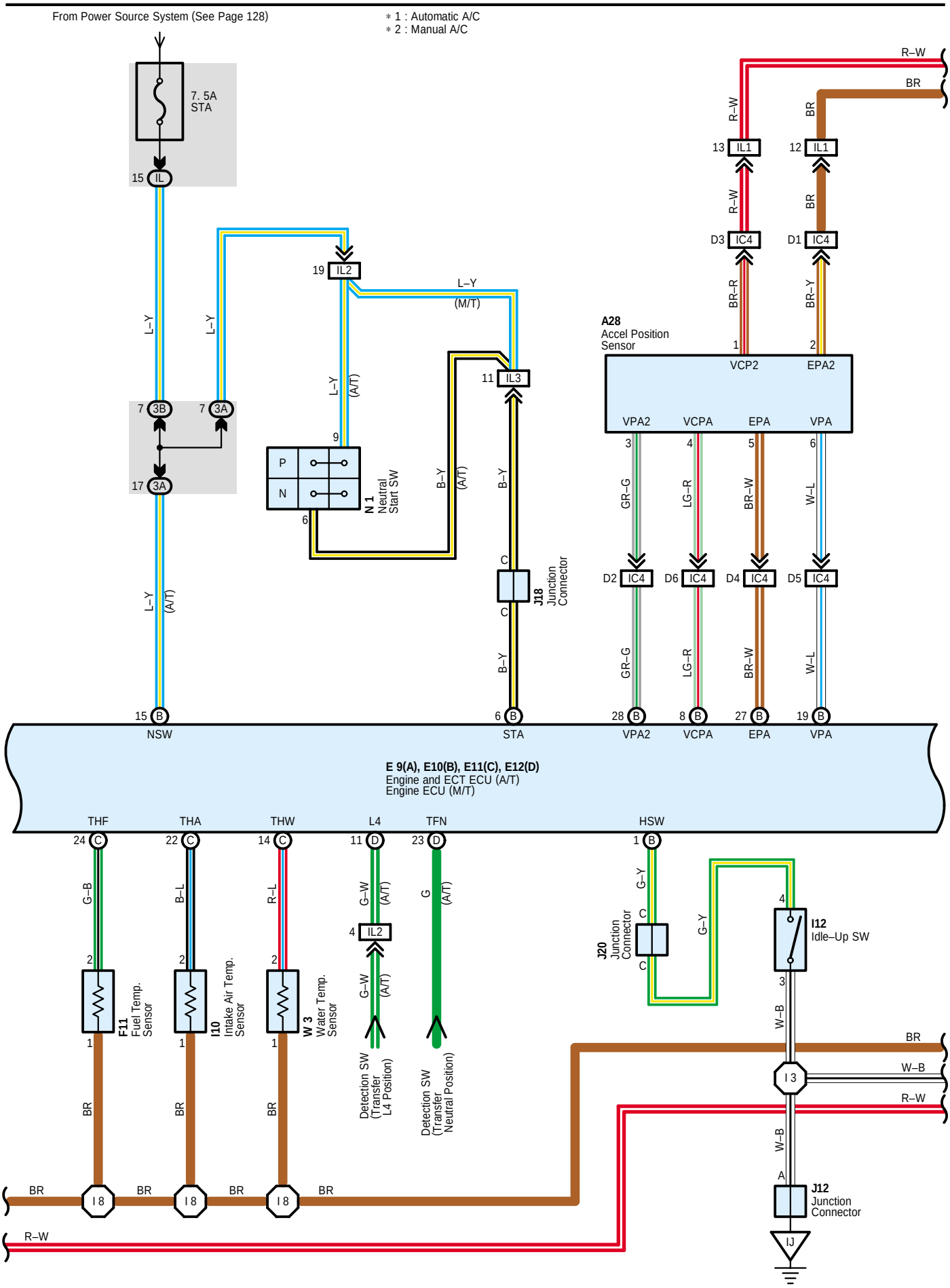
From Power Source System (See Page 128)
* 1 : Automatic A/C
* 2 : Manual A/C
7. 5A
STA
15 IL
L–Y
L–Y
7 3B
7 3A
17 3A
L–Y
(A/T)
15 B
NSW
19 IL2
L–Y
(M/T)
L–Y
(A/T)
9
P
N
6
N 1
Neutral
Start SW
B–Y
(A/T)
11 IL3
B–Y
C
C
J18
Junction
Connector
B–Y
6 B
STA
R–W
BR
13 IL1
12 IL1
R–W
BR
D3 IC4
D1 IC4
BR–R
BR–Y
A28
Accel Position
Sensor
1
2
VCP2
EPA2
VPA2
VCPA
EPA
VPA
3
4
5
6
GR–G
LG–R
BR–W
W–L
D2 IC4
D6 IC4
D4 IC4
D5 IC4
GR–G
LG–R
BR–W
W–L
28 B
VPA2
8 B
VCPA
27 B
EPA
19 B
VPA
E 9(A), E10(B), E11(C), E12(D)
Engine and ECT ECU (A/T)
Engine ECU (M/T)
THF
THA
THW
L4
TFN
HSW
24 C
22 C
14 C
11 D
23 D
1 B
G–B
B–L
R–L
G–W
(A/T)
G
(A/T)
G–Y
4 IL2
C
C
J20
Junction
Connector
G–Y
4
I12
Idle–Up SW
2
2
2
F11
Fuel Temp.
Sensor
I10
Intake Air Temp.
Sensor
W 3
Water Temp.
Sensor
G–W
(A/T)
Detection SW
(Transfer
L4 Position)
Detection SW
(Transfer
Neutral Position)
3
W–B
1
1
1
BR
BR
BR
BR
W–B
R–W
I 3
W–B
A
J12
Junction
Connector
IJ
BR
I 8
BR
I 8
BR
I 8
BR
R–W

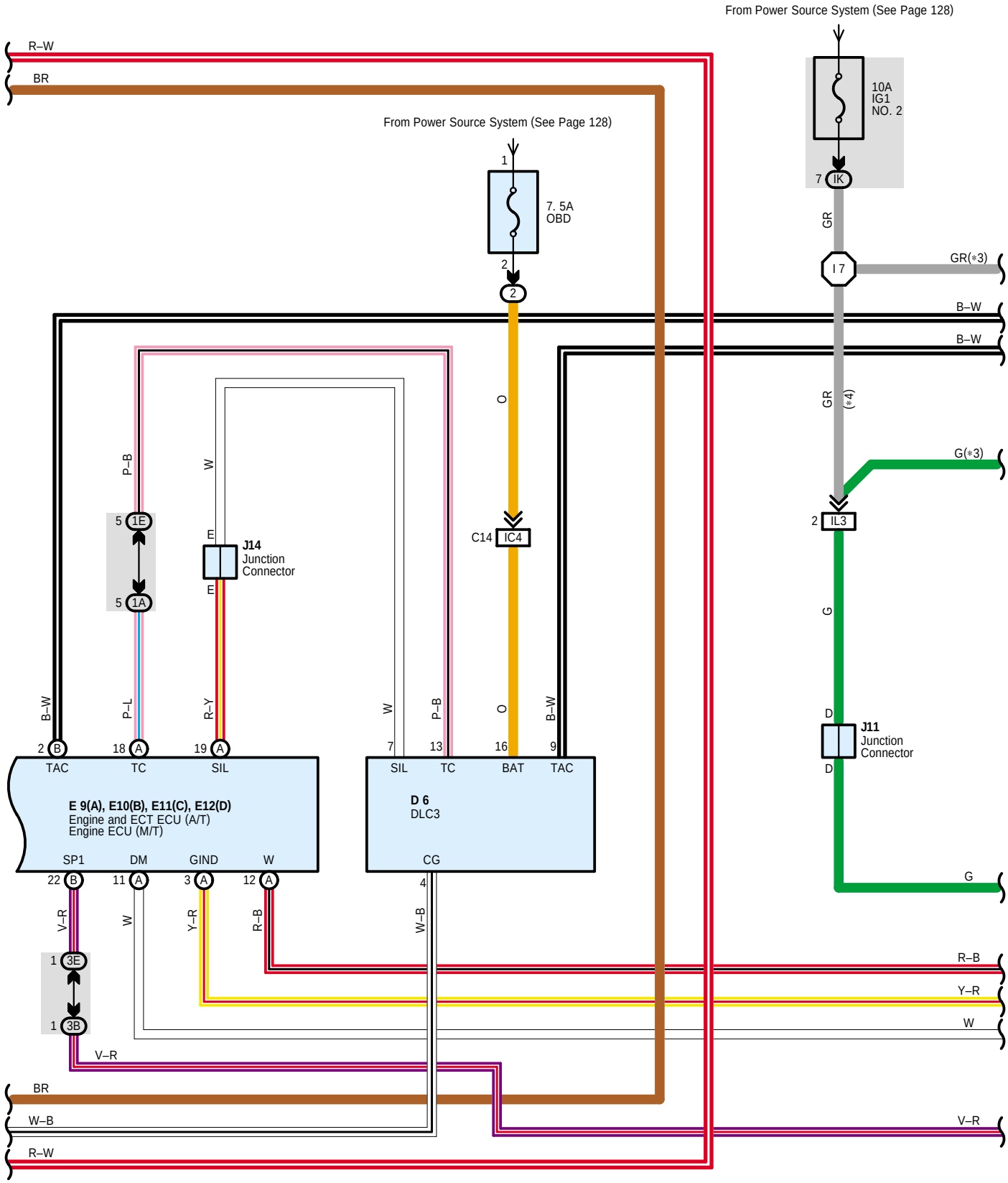
From Power Source System (See Page 128)
R–W
BR
10A
IG1
NO. 2
7 IK
GR
I 7
GR(*3)
From Power Source System (See Page 128)
1
7. 5A
OBD
2
2
B–W
B–W
O
GR
(*4)
G(*3)
P–B
W
5 1E
5 1A
E
J14
Junction
Connector
E
C14 IC4
2 IL3
G
B–W
P–L
R–Y
W
P–B
O
B–W
D
J11
Junction
Connector
D
2 B
18 A
19 A
7
13
16
9
TAC
TC
SIL
SIL
TC
BAT
TAC
E 9(A), E10(B), E11(C), E12(D)
Engine and ECT ECU (A/T)
Engine ECU (M/T)
D 6
DLC3
SP1
DM
GIND
W
CG
22 B
11 A
3 A
12 A
4
G
V–R
W
Y–R
R–B
W–B
1 3E
1 3B
R–B
Y–R
W
V–R
BR
W–B
V–R
R–W

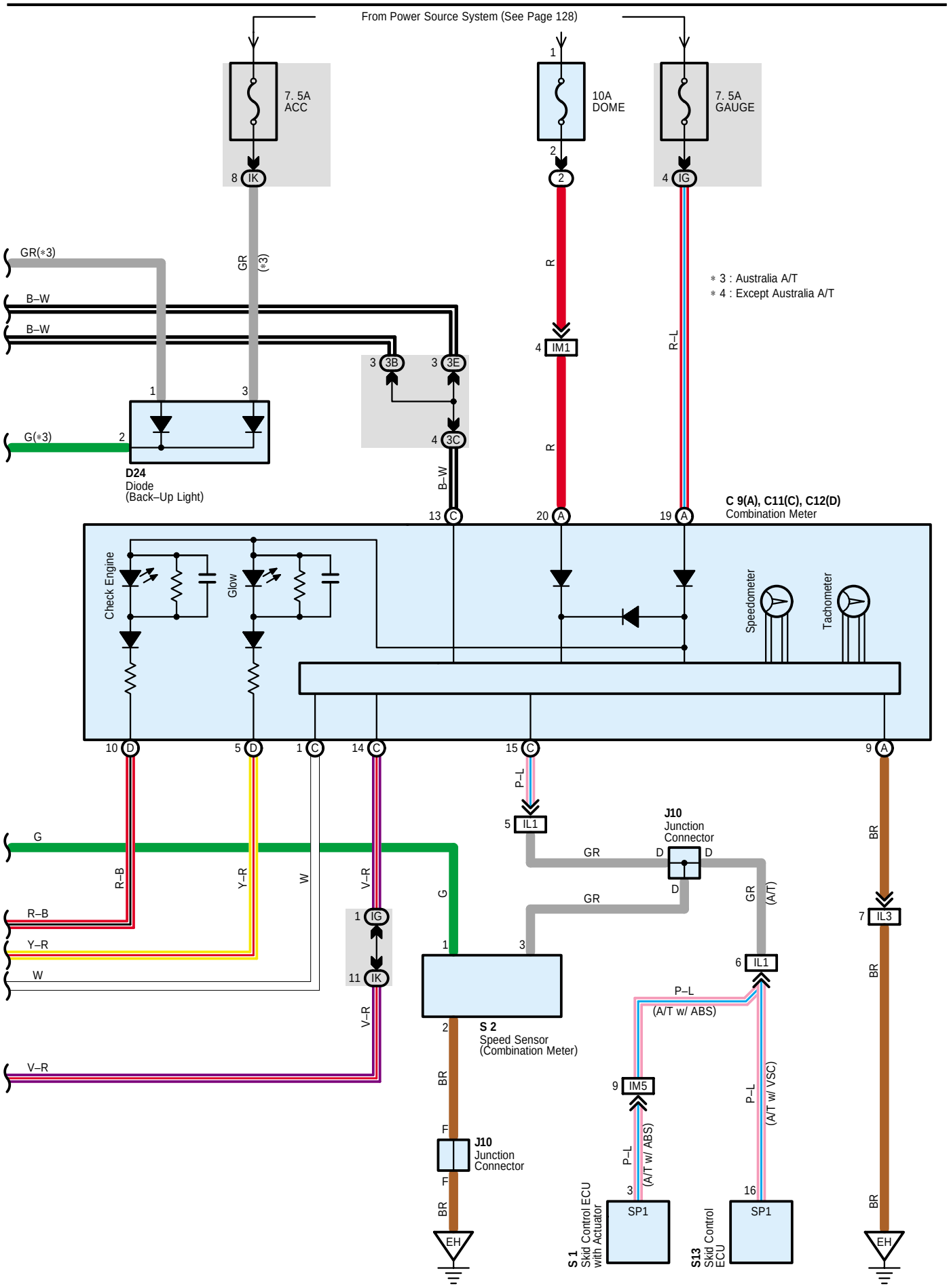
From Power Source System (See Page 128)
7. 5A
ACC
10A
DOME
7. 5A
GAUGE
8 IK
1
2
2
4 IG
GR(*3)
GR
(*3)
R
R–L
* 3 : Australia A/T
* 4 : Except Australia A/T
B–W
B–W
3 3B
3 3E
4 IM1
1
3
G(*3)
2
4 3C
D24
Diode
(Back–Up Light)
B–W
R
13 C
20 A
19 A
C 9(A), C11(C), C12(D)
Combination Meter
Check Engine
Glow
Speedometer
Tachometer
10 D
5 D
1 C
14 C
15 C
9 A
P–L
5 IL1
J10
Junction
Connector
G
GR
D
D
D
BR
R–B
Y–R
W
V–R
G
GR
GR
(A/T)
R–B
Y–R
W
1 IG
11 IK
1
3
7 IL3
6 IL1
P–L
(A/T w/ ABS)
V–R
V–R
2
S 2
Speed Sensor
(Combination Meter)
BR
9 IM5
P–L
(A/T w/ VSC)
F
J10
Junction
Connector
F
P–L
(A/T w/ ABS)
3
16
BR
SP1
SP1
S 1
Skid Control ECU
with Actuator
S13
Skid Control
ECU
BR
EH
EH

System Outline

The engine control system utilizes a microcomputer and maintains overall control of the engine, etc. An outline of the engine control is given here.

1. Input Signals

(1) Engine coolant temp. signal system
The water temp. sensor detects the engine coolant temp. and has a built–in thermistor with a resistance which varies according to the engine coolant temp. Thus the engine coolant temp. is input in the form of a control signal to TERMINAL THW of the engine and ECT ECU (A/T), engine ECU (M/T).

(2) Intake air temp. signal system
The intake air temp. sensor is detects the intake air temp., which is input as a control signal to TERMINAL THA of the engine and ECT ECU (A/T), engine ECU (M/T).

(3) RPM signal system
Crankshaft position and camshaft position are detected by the crankshaft position sensor and engine speed sensor. Crankshaft position is input as a control signal to TERMINAL TDC+ of the engine and ECT ECU (A/T), engine ECU (M/T), and RPM is input to TERMINAL NE+.

(4) Throttle signal system
The accelerator pedal position sensor detects the accelerator pedal opening angle, which is input as a control signal to TERMINALS VPA, VPA2 of the engine and ECT ECU (A/T), engine ECU (M/T).

(5) Vehicle speed signal system
The speed sensor detects the vehicle speed and input a control signal to TERMINAL SP1 of the engine and ECT ECU (A/T), engine ECU (M/T) via the combination meter.

(6) A/C SW signal system
The operating voltage of the A/C control assembly (Automatic A/C), A/C amplifier (Manual A/C) is detected and input in the form of a control signal to TERMINAL AC1 of the engine and ECT ECU (A/T), engine ECU (M/T).

(7) Battery signal system
Voltage is constantly applied to TERMINAL BATT of the engine and ECT ECU (A/T), engine ECU (M/T). When the ignition SW is turned on, the voltage for engine and ECT ECU (A/T), engine ECU (M/T) start up power supply is applied through the EFI relay, to TERMINAL +B of the engine and ECT ECU (A/T), engine ECU (M/T). The current from the IGN fuse flows to TERMINAL IGSW of the engine and ECT ECU (A/T), engine ECU (M/T).

(8) STA signal system
To confirm that the engine is cranking, the voltage applied to the starter motor during cranking is detected and is input as a control signal to TERMINAL STA of the engine and ECT ECU (A/T), engine ECU (M/T).

(9) Fuel temp. signal system
The fuel temp. sensor is detects the fuel temp., which is input as a control signal to TERMINAL THF of the engine and ECT ECU (A/T), engine ECU (M/T).

(10) Intake air vacuum pressure signal system
Intake air vacuum pressure is detected by the turbo pressure sensor and is input as a control signal to TERMINAL PIM of the engine and ECT ECU (A/T), engine ECU (M/T).

2. Control System

* Fuel injection volume control system
  The fuel injection volume control system monitors the engine conditions through the signals (Input signals (1, 2, 3, 4, 5, 9, 10)) input from each sensors to the engine and ECT ECU (A/T), engine ECU (M/T). Engine and ECT ECU (A/T), engine ECU (M/T) has basic data and the program (Memorized in the engine and ECT ECU (A/T), engine ECU (M/T)) and decides the most appropriate fuel injection volume, and outputs the current to the TERMINAL SPV+ of the engine and ECT ECU (A/T), engine ECU (M/T), causing the spill control valve to operate it.
* Fuel injection timing control system
  The fuel injection timing control system monitors the engine conditions through the signals (Input signals (1, 3, 4, 5, 10)) input from each sensors to the engine and ECT ECU (A/T), engine ECU (M/T). Engine and ECT ECU (A/T), engine ECU (M/T) has basic data and the program (Memorized in the engine and ECT ECU (A/T), engine ECU (M/T)) and decides the most appropriate fuel injection timing, and outputs the current to the TERMINAL TCV of the engine and ECT ECU (A/T), engine ECU (M/T), causing the timing control valve to operate it.
* GLOW relay control system
  When the engine starts, the GLOW relay is controlled in response to engine coolant temp. At that time, the engine and ECT ECU (A/T), engine ECU (M/T) receives the signals (Input signals (1, 3, 8)), and the current is output to the TERMINALS SREL and GIND.
  As a result, the engine and ECT ECU (A/T), engine ECU (M/T) controls the GLOW relay and makes the glow indicator light come on.
* EGR control system
  The EGR control system detects the signals from each sensors (Input signals (1, 3, 4, 10)), then the current is output to the TERMINAL EGR to control the VRV (EGR).
* A/C cut control system
  When the vehicle suddenly accelerates from low engine speed, this system cuts off air conditioner operation for a fixed period of time in response to the vehicle speed, throttle valve opening angle and intake manifold pressure in order to maintain acceleration performance.
  The engine and ECT ECU (A/T), engine ECU (M/T) receives input signals (3, 4, 5, 6 and 10), and outputs signals to TERMINAL ACT.

3. Diagnosis System

With the diagnosis system, when there is a malfunctioning in the engine and ECT ECU (A/T), engine ECU (M/T) signal system, the malfunction system is recorded in the memory. The malfunctioning system can be found by reading the display (Code) of the check engine warning light.

4. Fail-Safe System

When a malfunction occurs in any system, if there is a possibility of engine trouble being caused by continued control based on the signals from that system, the fail-safe system either controls the system by using data (Standard values) recorded in the engine and ECT ECU (A/T), engine ECU (M/T) memory or else stops the engine.

Service Hints

EFI Relay

5–3 : Closed with the ignition SW at ON position

W3 Water Temp. Sensor

1–2 : Approx. 15.0 kΩ (–20˚C, –4˚F)
: Approx. 2.45 kΩ (20˚C, 68˚F)
: Approx. 0.32 kΩ (80˚C, 176˚F)
: Approx. 0.14 kΩ (110˚C, 230˚F)

E9 (A), E10 (B), E11 (C), E12 (D) Engine and ECT ECU (A/T), Engine ECU (M/T)

BATT–E1 : Always 9.0–14.0 volts
IGSW–E1 : 9.0–14.0 volts with the ignition SW at ON position
+B–E1 : 9.0–14.0 volts with the ignition SW at ON position
VC–E1 : 4.5–5.5 volts with the ignition SW at ON position
VPA–E1 : 0.3–0.9 volts with the ignition SW on and throttle valve fully closed
: 3.2–4.8 volts with the ignition SW on and throttle valve fully open
VPA2–E1 : 1.8–2.7 volts with the ignition SW on and throttle valve fully closed
: 4.7–5.1 volts with the ignition SW on and throttle valve fully open
THA–E1 : 0.5–3.4 volts with the idling, intake air temp. 0˚C (32˚F) –80˚C (176˚F)
THW–E1 : 0.2–1.0 volts with the idling, engine coolant temp. 60˚C (140˚F) –120˚C (248˚F)
STA–E1 : 6.0 volts or more with the engine cranking
W–E1 : 9.0–14.0 volts with the idling and check engine warning light off
SP1–E1 : Pulse generation with the vehicle moving
STP–E1 : 7.5–14.0 volts with the brake pedal depressed

◯ : Parts Location

Code		See Page	Code		See Page	Code	See Page
A20	D	48 (LHD)	G1		44 (*4)	J22	70 (RHD)
		68 (RHD)			64 (*13)	M1	45 (*4)
A21	A	48 (LHD)	I5		45 (*4)		65 (*13)
		68 (RHD)			65 (*13)	N1	45 (*4)
A22	B	48 (LHD)	I10		45 (*4)		65 (*13)
		68 (RHD)			65 (*13)	S1	45 (*4)
A28		48 (LHD)	I12		50 (LHD)		65 (*13)
		68 (RHD)			70 (RHD)	S2	45 (*4)
C3		44 (*4)	J2	A	45 (*4)		65 (*13)
		64 (*13)			65 (*13)	S12	51 (LHD)
C9	A	49 (LHD)	J3	B	45 (*4)		71 (RHD)
		69 (RHD)			65 (*13)	S13	51 (LHD)
C11	C	49 (LHD)	J5		45 (*4)		71 (RHD)
		69 (RHD)			65 (*13)	S18	51 (LHD)
C12	D	49 (LHD)	J7		50 (LHD)		71 (RHD)
		69 (RHD)			70 (RHD)	T2	45 (*4)
D6		49 (LHD)	J9		50 (LHD)		65 (*13)
		69 (RHD)			70 (RHD)	T3	45 (*4)
D24		69 (RHD)	J10		50 (LHD)		65 (*13)
E2		44 (*4)			70 (RHD)	T5	45 (*4)
		64 (*13)	J11		50 (LHD)		65 (*13)
E7		44 (*4)			70 (RHD)	T7	45 (*4)
		64 (*13)	J12		50 (LHD)		65 (*13)
E9	A	49 (LHD)			70 (RHD)	T9	51 (LHD)
		69 (RHD)	J14		50 (LHD)		71 (RHD)
E10	B	49 (LHD)			70 (RHD)	V5	45 (*4)
		69 (RHD)	J17		50 (LHD)		65 (*13)
E11	C	49 (LHD)			70 (RHD)	V8	45 (*4)
		69 (RHD)	J18		50 (LHD)		65 (*13)
E12	D	49 (LHD)			70 (RHD)	W3	45 (*4)
		69 (RHD)	J20		50 (LHD)		65 (*13)
F11		44 (*4)			70 (RHD)		
		64 (*13)	J22		50 (LHD)		

▭ : Relay Blocks

Code	See Page	Relay Blocks (Relay Block Location)
2	23	Engine Room R/B (Engine Compartment Left)
4	25	Engine Room R/B No.4 (Engine Compartment Left)

* 1 : LHD 1GR-FE * 2 : LHD 3RZ-FE * 3 : LHD 1KD-FTV * 4 : LHD 1KZ-TE * 5 : LHD 5L-E * 6 : LHD 5-Door * 7 : LHD 3-Door
* 8 : LHD 8Way Power Seat * 9 : LHD Except 8Way Power Seat * 10 : RHD 1GR-FE * 11 : RHD 3RZ-FE * 12 : RHD 1KD-FTV
* 13 : RHD 1KZ-TE * 14 : RHD 5L-E * 15 : RHD 5-Door * 16 : RHD 3-Door * 17 : RHD 8Way Power Seat
* 18 : RHD Except 8Way Power Seat

: **Junction Block and Wire Harness Connector**

Code	See Page	Junction Block and Wire Harness (Connector Location)
IE	26 (LHD)	Engine Room Main Wire and Driver Side J/B (Lower Finish Panel)
	28 (RHD)	
IG	27 (LHD)	Instrument Panel Wire and Driver Side J/B (Lower Finish Panel)
	29 (RHD)	
IJ	27 (LHD)	
	29 (RHD)	
IK	27 (LHD)	
	29 (RHD)	
IL	27 (LHD)	
	29 (RHD)	
1A	32 (LHD)	Instrument Panel Wire and J/B No.1 (Instrument Panel Reinforcement Left)
	32 (RHD)	Instrument Panel Wire and J/B No.1 (Instrument Panel Reinforcement Right)
1E	32 (LHD)	Instrument Panel Wire and J/B No.1 (Instrument Panel Reinforcement Left)
	32 (RHD)	Instrument Panel Wire and J/B No.1 (Instrument Panel Reinforcement Right)
3A	36 (LHD)	Instrument Panel Wire and J/B No.3 (Instrument Panel Reinforcement Right)
	36 (RHD)	Instrument Panel Wire and J/B No.3 (Instrument Panel Reinforcement Left)
3B	36 (LHD)	Instrument Panel Wire and J/B No.3 (Instrument Panel Reinforcement Right)
	36 (RHD)	Instrument Panel Wire and J/B No.3 (Instrument Panel Reinforcement Left)
3C	36 (LHD)	Instrument Panel Wire and J/B No.3 (Instrument Panel Reinforcement Right)
	36 (RHD)	Instrument Panel Wire and J/B No.3 (Instrument Panel Reinforcement Left)
3D	36 (LHD)	Instrument Panel Wire and J/B No.3 (Instrument Panel Reinforcement Right)
	36 (RHD)	Instrument Panel Wire and J/B No.3 (Instrument Panel Reinforcement Left)
3E	36 (LHD)	Instrument Panel Wire and J/B No.3 (Instrument Panel Reinforcement Right)
	36 (RHD)	Instrument Panel Wire and J/B No.3 (Instrument Panel Reinforcement Left)

: **Connector Joining Wire Harness and Wire Harness**

Code	See Page	Joining Wire Harness and Wire Harness (Connector Location)
EB1	84 (*4)	Engine Room Main Wire and Engine Wire (Rear Side of the Engine Room R/B)
	108 (*13)	
IC4	88 (LHD)	Instrument Panel Wire and Engine Room Main Wire (Left Kick Panel)
	112 (RHD)	
IL1	92 (LHD)	Engine Wire and Instrument Panel Wire (Right Side of the Blower Unit)
	116 (RHD)	Engine Wire and Instrument Panel Wire (Left Side of the Blower Unit)
IL2	92 (LHD)	Engine Wire and Instrument Panel Wire (Right Side of the Blower Unit)
	116 (RHD)	Engine Wire and Instrument Panel Wire (Left Side of the Blower Unit)
IL3	92 (LHD)	Engine Wire and Instrument Panel Wire (Right Side of the Blower Unit)
	116 (RHD)	Engine Wire and Instrument Panel Wire (Left Side of the Blower Unit)
IM1	92 (LHD)	Instrument Panel Wire and Engine Room Main Wire (Right Kick Panel)
	116 (RHD)	
IM4	92 (LHD)	
IM5	92 (LHD)	
	116 (RHD)	

* 1 : LHD 1GR-FE * 2 : LHD 3RZ-FE * 3 : LHD 1KD-FTV * 4 : LHD 1KZ-TE * 5 : LHD 5L-E * 6 : LHD 5-Door * 7 : LHD 3-Door
* 8 : LHD 8Way Power Seat * 9 : LHD Except 8Way Power Seat * 10 : RHD 1GR-FE * 11 : RHD 3RZ-FE * 12 : RHD 1KD-FTV
* 13 : RHD 1KZ-TE * 14 : RHD 5L-E * 15 : RHD 5-Door * 16 : RHD 3-Door * 17 : RHD 8Way Power Seat
* 18 : RHD Except 8Way Power Seat

▽ : **Ground Points**

Code	See Page	Ground Points Location
EB	84 (*4)	Front Left Fender
	108 (*13)	
EH	84 (*4)	Rear Part of Cylinder Block
	108 (*13)	
IJ	88 (LHD)	Left Kick Panel
	112 (RHD)	Right Kick Panel

⬡ : **Splice Points**

Code	See Page	Wire Harness with Splice Points	Code	See Page	Wire Harness with Splice Points
I3	90 (LHD)	Instrument Panel Wire	I7	114 (RHD)	Instrument Panel Wire
	114 (RHD)		I8	90 (LHD)	Engine Wire
I7	90 (LHD)			114 (RHD)	

* 1 : LHD 1GR-FE * 2 : LHD 3RZ-FE * 3 : LHD 1KD-FTV * 4 : LHD 1KZ-TE * 5 : LHD 5L-E * 6 : LHD 5-Door * 7 : LHD 3-Door
* 8 : LHD 8Way Power Seat * 9 : LHD Except 8Way Power Seat * 10 : RHD 1GR-FE * 11 : RHD 3RZ-FE * 12 : RHD 1KD-FTV
* 13 : RHD 1KZ-TE * 14 : RHD 5L-E * 15 : RHD 5-Door * 16 : RHD 3-Door * 17 : RHD 8Way Power Seat
* 18 : RHD Except 8Way Power Seat

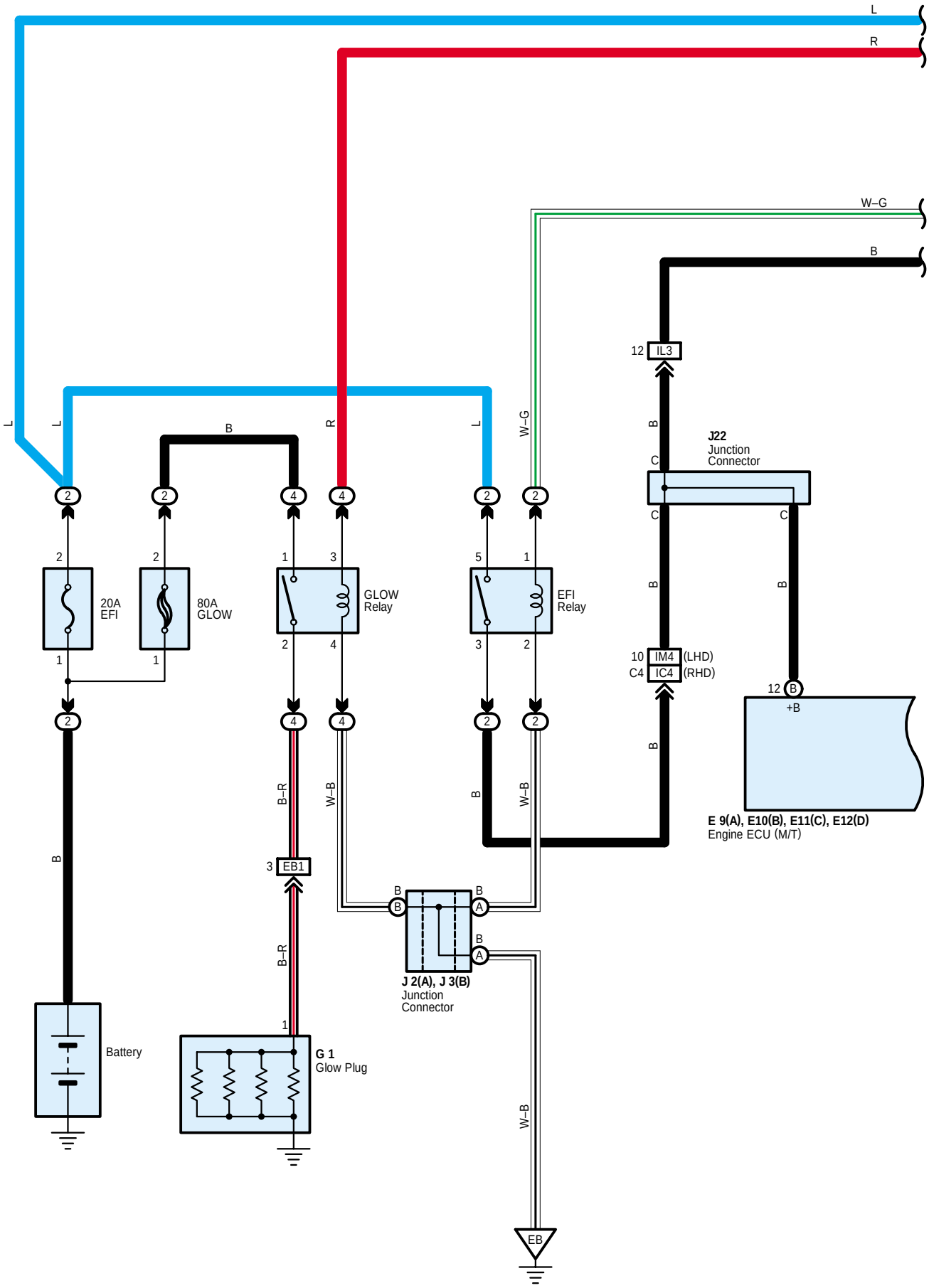
L
R
W–G
B
12 IL3
J22
Junction
Connector
20A
EFI
80A
GLOW
GLOW
Relay
EFI
Relay
10 IM4 (LHD)
C4 IC4 (RHD)
12 B
+B
E 9(A), E10(B), E11(C), E12(D)
Engine ECU (M/T)
B–R
W–B
3 EB1
J 2(A), J 3(B)
Junction
Connector
Battery
G 1
Glow Plug
EB

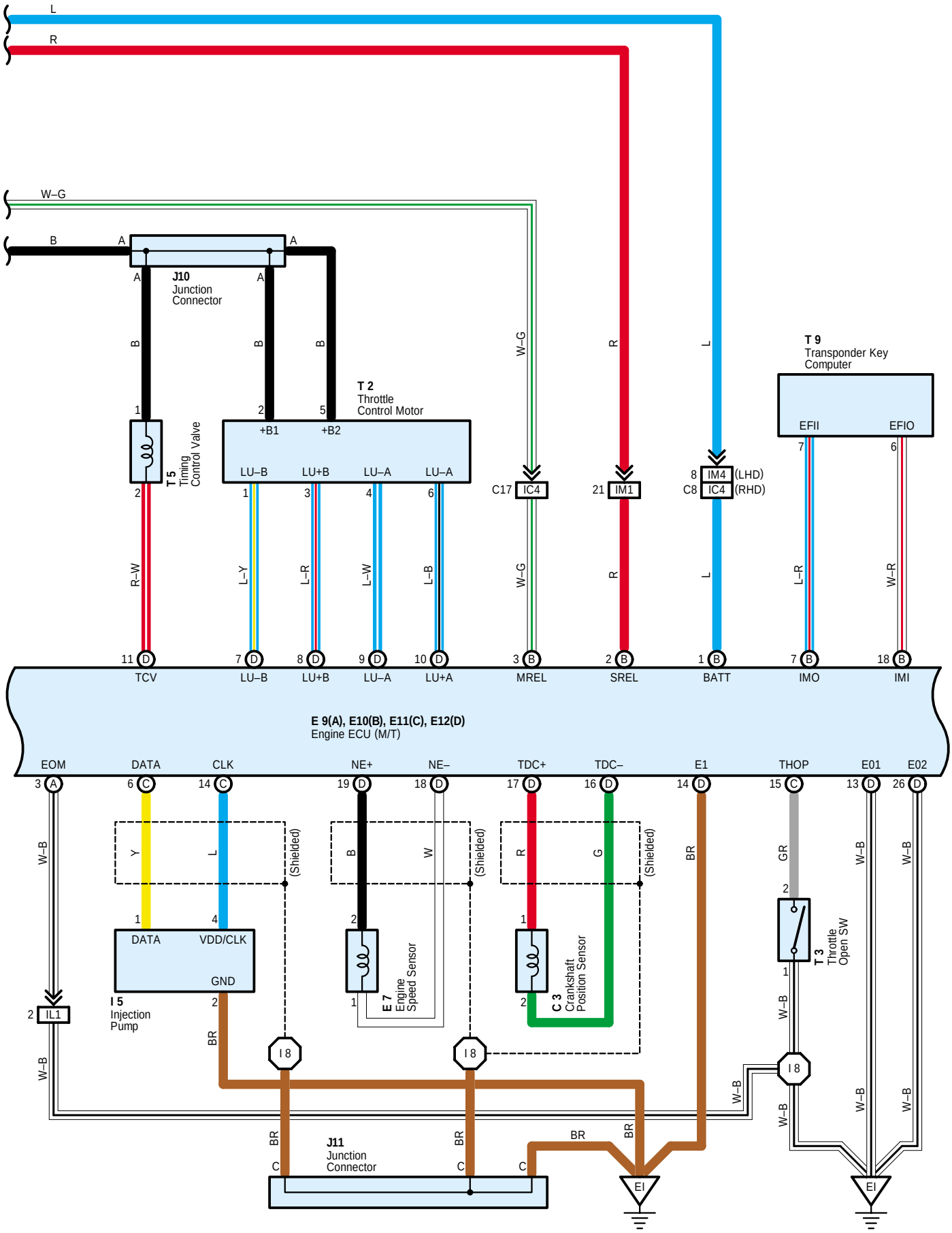
L
R
W–G
B
J10
Junction
Connector
T 5
Timing
Control Valve
T 2
Throttle
Control Motor
+B1
+B2
LU–B
LU+B
LU–A
LU–A
C17 IC4
21 IM1
8 IM4 (LHD)
C8 IC4 (RHD)
T 9
Transponder Key
Computer
EFII
EFIO
R–W
L–Y
L–R
L–W
L–B
W–G
R
L
L–R
W–R
TCV
LU–B
LU+B
LU–A
LU+A
MREL
SREL
BATT
IMO
IMI
E 9(A), E10(B), E11(C), E12(D)
Engine ECU (M/T)
EOM
DATA
CLK
NE+
NE–
TDC+
TDC–
E1
THOP
E01
E02
Y
L
(Shielded)
B
W
R
G
BR
GR
DATA
VDD/CLK
GND
I 5
Injection
Pump
IL1
E 7
Engine
Speed Sensor
C 3
Crankshaft
Position Sensor
T 3
Throttle
Open SW
I 8
W–B
J11
Junction
Connector
EI

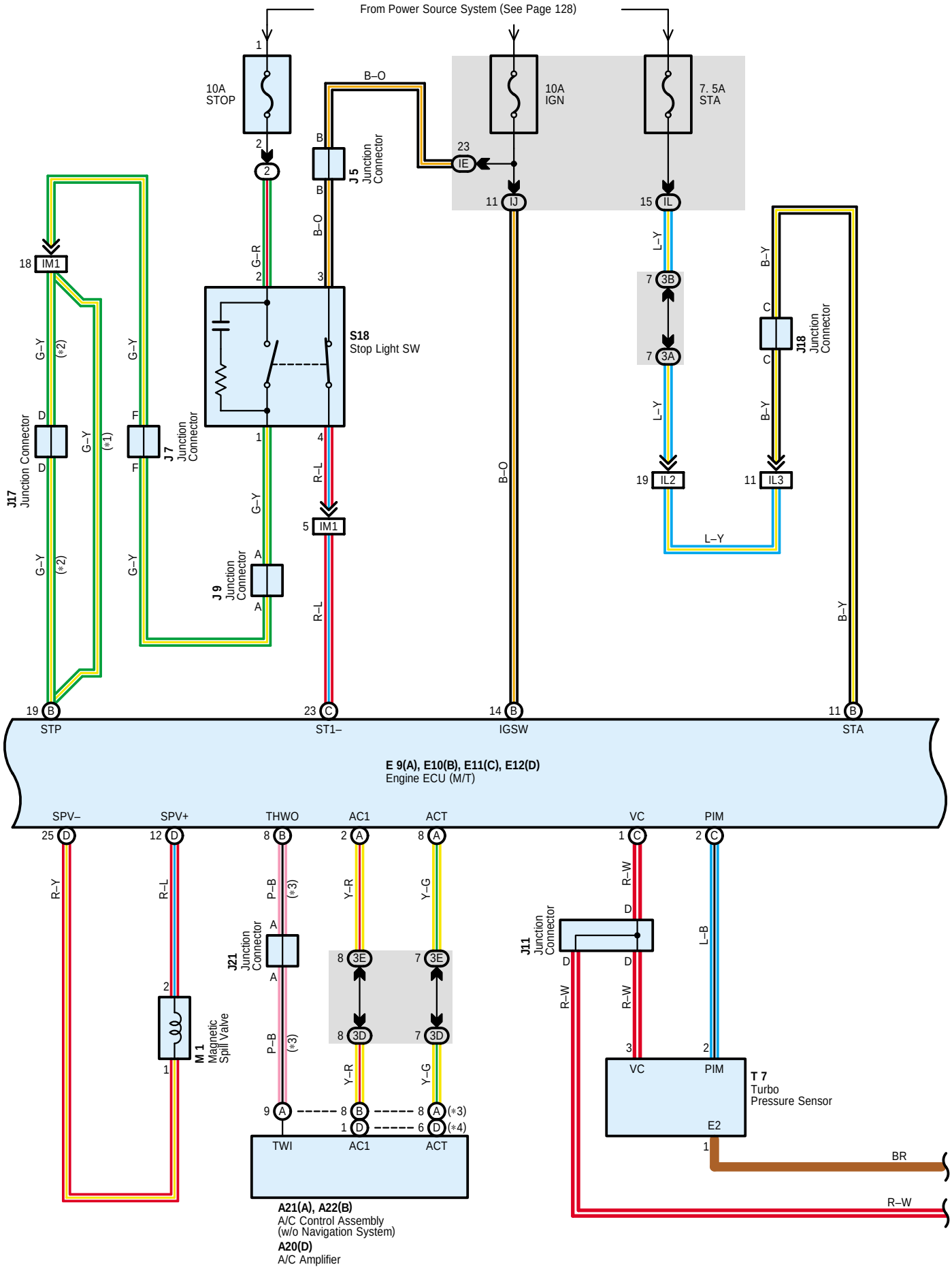
From Power Source System (See Page 128)
10A STOP
10A IGN
7. 5A STA
J 5 Junction Connector
J 7 Junction Connector
J 9 Junction Connector
J 17 Junction Connector
J 18 Junction Connector
J 21 Junction Connector
J 11 Junction Connector
S18 Stop Light SW
M 1 Magnetic Spill Valve
T 7 Turbo Pressure Sensor
E 9(A), E10(B), E11(C), E12(D)
Engine ECU (M/T)
STP
ST1–
IGSW
STA
SPV–
SPV+
THWO
AC1
ACT
VC
PIM
TWI
E2
A21(A), A22(B)
A/C Control Assembly
(w/o Navigation System)
A20(D)
A/C Amplifier
B–O
G–R
G–Y
R–L
L–Y
B–Y
R–Y
P–B
Y–R
Y–G
R–W
L–B
BR

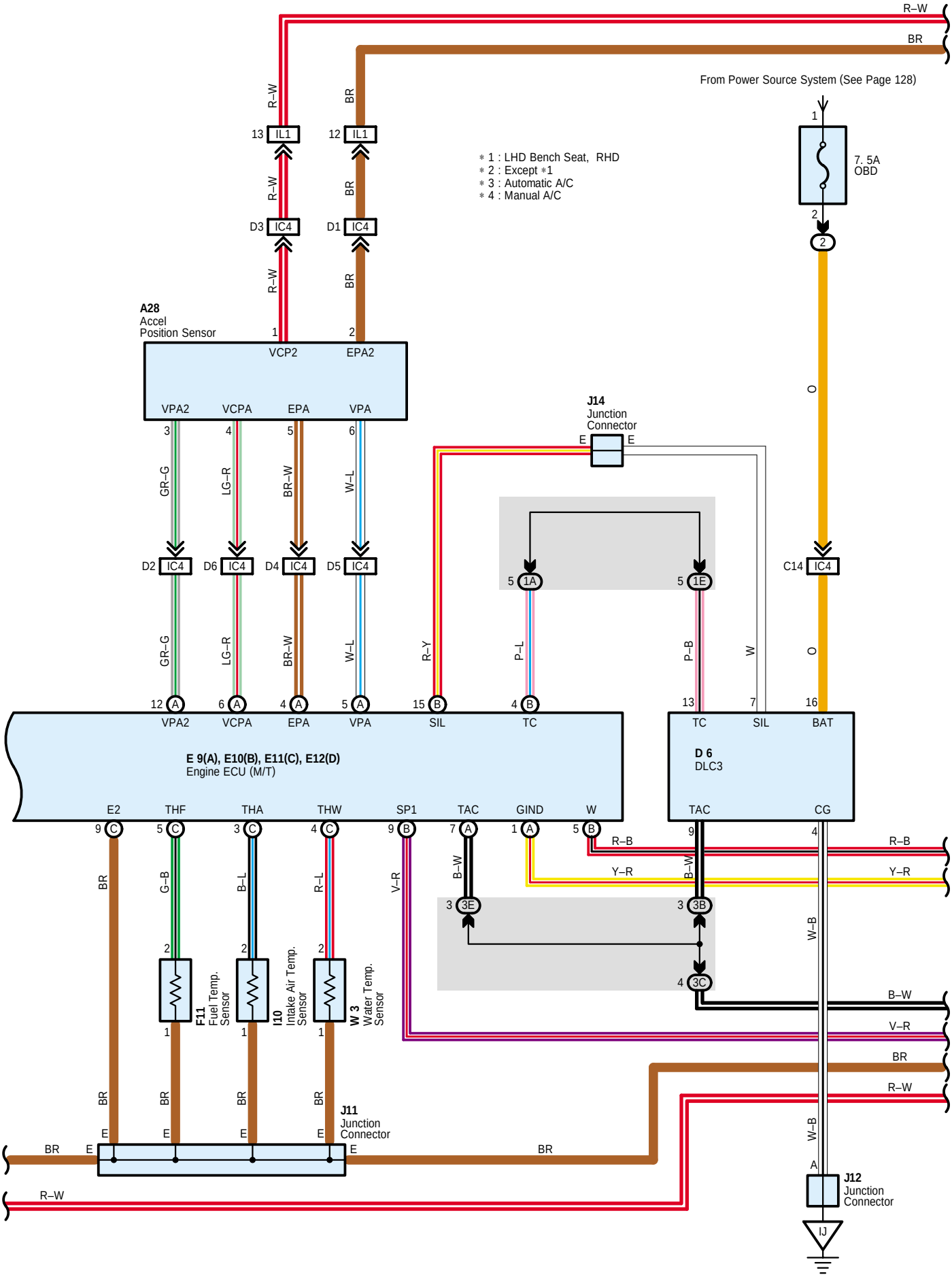
R–W
BR
From Power Source System (See Page 128)
7. 5A
OBD
∗ 1 : LHD Bench Seat, RHD
∗ 2 : Except ∗1
∗ 3 : Automatic A/C
∗ 4 : Manual A/C
IL1
IC4
A28
Accel
Position Sensor
VCP2
EPA2
VPA2
VCPA
EPA
VPA
J14
Junction
Connector
GR–G
LG–R
BR–W
W–L
R–Y
P–L
P–B
W
O
C14
E 9(A), E10(B), E11(C), E12(D)
Engine ECU (M/T)
SIL
TC
BAT
D 6
DLC3
E2
THF
THA
THW
SP1
TAC
GIND
CG
R–B
Y–R
B–W
V–R
G–B
B–L
F11
Fuel Temp.
Sensor
I10
Intake Air Temp.
Sensor
W 3
Water Temp.
Sensor
J11
Junction
Connector
J12
Junction
Connector
IJ

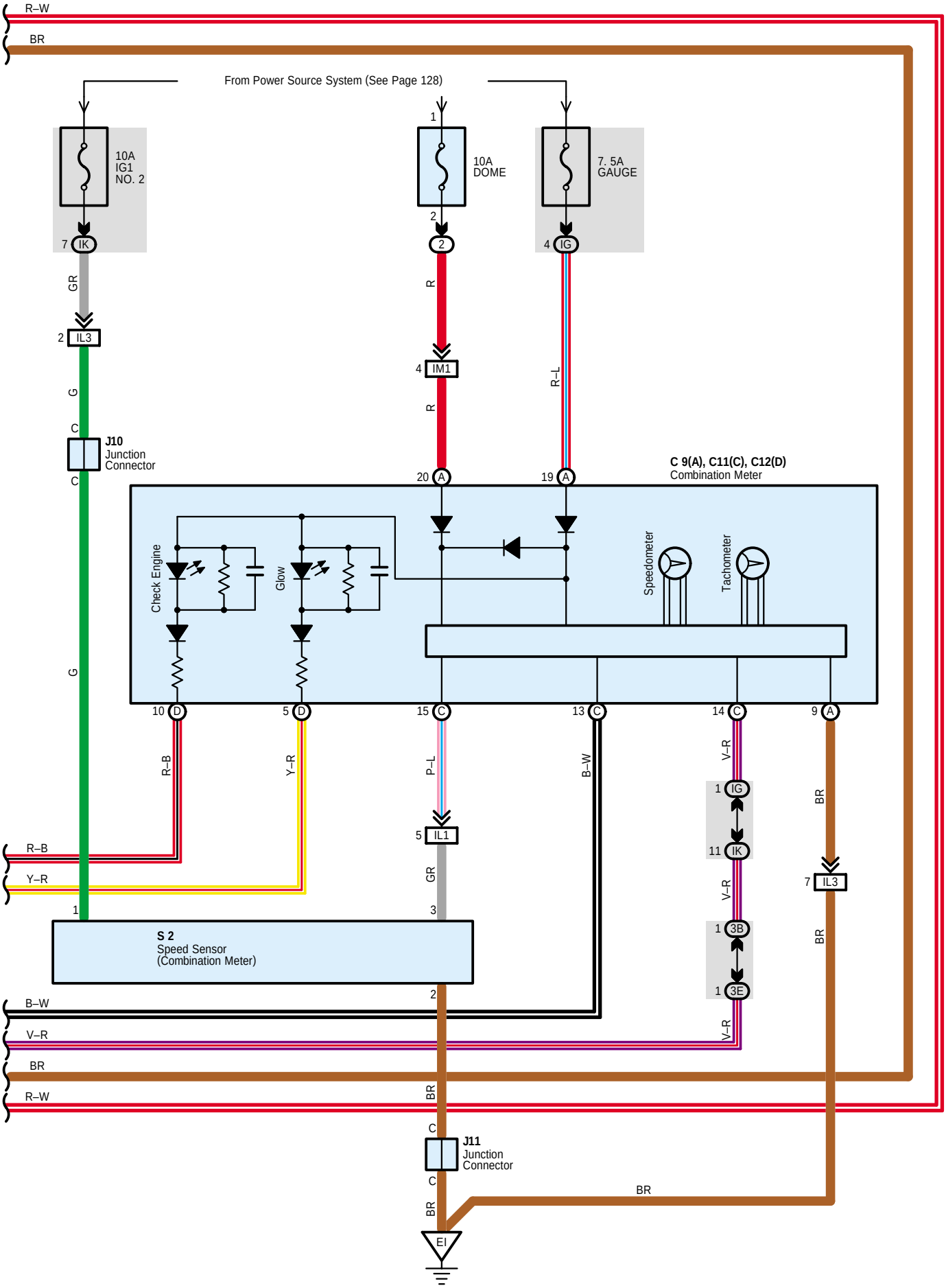
R–W
BR
From Power Source System (See Page 128)
10A
IG1
NO. 2
10A
DOME
7. 5A
GAUGE
7 IK
1
2
4 IG
GR
2 IL3
R
4 IM1
R–L
R
G
C
J10
Junction
Connector
C
20 A
19 A
C 9(A), C11(C), C12(D)
Combination Meter
Check Engine
Glow
Speedometer
Tachometer
G
10 D
5 D
15 C
13 C
14 C
9 A
R–B
Y–R
P–L
B–W
V–R
1 IG
11 IK
V–R
1 3B
1 3E
V–R
BR
BR
5 IL1
GR
3
7 IL3
R–B
Y–R
1
S 2
Speed Sensor
(Combination Meter)
2
B–W
V–R
BR
R–W
BR
C
J11
Junction
Connector
C
BR
BR
EI

System Outline

The engine control system utilizes a microcomputer and maintains overall control of the engine, etc. An outline of the engine control is given here.

1. Input Signals

(1) Engine coolant temp. signal system

The water temp. sensor detects the engine coolant temp. and has a built–in thermistor with a resistance which varies according to the water temp. Thus the water temp. is input in the form of a control signal to TERMINAL THW of the engine ECU.

(2) Intake air temp. signal system

The intake air temp. sensor is detects the intake air temp., which is input as a control signal to TERMINAL THA of the engine ECU.

(3) RPM signal system

Crankshaft position and camshaft position are detected by the crankshaft position sensor and engine speed sensor. Crankshaft position is input as a control signal to TERMINAL TDC+ of the engine ECU, and RPM is input to TERMINAL NE+.

(4) Throttle signal system

The accelerator pedal position sensor detects the accelerator pedal opening angle, which is input as a control signal to TERMINALS VPA, VPA2 of the engine ECU.

(5) Vehicle speed signal system

The speed sensor detects the vehicle speed and input a control signal to TERMINAL SP1 of the engine ECU via the combination meter.

(6) A/C SW signal system

The operating voltage of the A/C control assembly (Automatic A/C), A/C amplifier (Manual A/C) is detected and input in the form of a control signal to TERMINAL AC1 of the engine ECU.

(7) Battery signal system

Voltage is constantly applied to TERMINAL BATT of the engine ECU. When the ignition SW is turned to on, voltage for engine ECU operation is applied via the EFI relay to TERMINAL +B of the engine ECU.

(8) STA signal system

To confirm that the engine is cranking, the voltage applied to the starter motor during cranking is detected and is input as a control signal to TERMINAL STA of the engine ECU.

(9) Fuel temp. signal system

The fuel temp. sensor is detects the fuel temp., which is input as a control signal to TERMINAL THF of the engine ECU.

(10) Intake air vacuum pressure signal system

Intake air vacuum pressure is detected by the turbo pressure sensor and is input as a control signal to TERMINAL PIM of the engine ECU.

2. Control System

∗ Fuel injection volume control system
The fuel injection volume control system monitors the engine conditions through the signals (Input signals (1, 2, 3, 4, 5, 9, 10)) input from each sensors to the engine ECU. Engine ECU has basic data and the program (Memorized in the engine ECU) and decides the most appropriate fuel injection volume, and outputs the current to the TERMINAL SPV+ of the engine ECU, causing the spill control valve to operate it.

∗ Fuel injection timing control system
The fuel injection timing control system monitors the engine conditions through the signals (Input signals (1, 3, 4, 5, 10)) input from each sensors to the engine ECU. Engine ECU has basic data and the program (Memorized in the engine ECU) and decides the most appropriate fuel injection timing, and outputs the current to the TERMINAL TCV of the engine ECU, causing the timing control valve to operate it.

∗ GLOW relay control system
When the engine starts, the GLOW relay is controlled in response to engine coolant temp. At that time, the engine ECU receives the signals (Input signals (1, 3, 8)), and the current is output to the TERMINALS SREL and GIND.
As a result, the engine ECU controls the GLOW relay and makes the glow indicator light come on.

∗ A/C cut control system
When the vehicle suddenly accelerates from low engine speed, this system cuts off air conditioner operation for a fixed period of time in response to the vehicle speed, throttle valve opening angle and intake manifold pressure in order to maintain acceleration performance.
The engine ECU receives input signals (3, 4, 5, 6 and 10), and outputs signals to TERMINAL ACT.

3. Diagnosis System

With the diagnosis system, when there is a malfunctioning in the engine ECU signal system, the malfunction system is recorded in the memory. The malfunctioning system can be found by reading the display (Code) of the check engine warning light.

4. Fail–Safe System

When a malfunction occurs in any system, if there is a possibility of engine trouble being caused by continued control based on the signals from that system, the fail–safe system either controls the system by using data (Standard values) recorded in the engine ECU memory or else stops the engine.

Service Hints

EFI Relay

5–3 : Closed with the ignition SW at ON position

W3 Water Temp. Sensor

1–2 : Approx. 15.0 kΩ (–20˚C, –4˚F)
: Approx. 2.45 kΩ (20˚C, 68˚F)
: Approx. 0.32 kΩ (80˚C, 176˚F)
: Approx. 0.14 kΩ (110˚C, 230˚F)

E9 (A), E10 (B), E11 (C), E12 (D) Engine ECU

BATT–E1 : Always 9.0–14.0 volts
IGSW–E1 : 9.0–14.0 volts with the ignition SW at ON position
+B–E1 : 9.0–14.0 volts with the ignition SW at ON position
VC–E1 : 4.5–5.5 volts with the ignition SW at ON position
VPA–E1 : 0.3–0.9 volts with the ignition SW on and throttle valve fully closed
: 3.2–4.8 volts with the ignition SW on and throttle valve fully open
VPA2–E1 : 1.8–2.7 volts with the ignition SW on and throttle valve fully closed
: 4.7–5.1 volts with the ignition SW on and throttle valve fully open
THA–E1 : 0.5–3.4 volts with the idling, intake air temp. 0˚C (32˚F) –80˚C (176˚F)
THW–E1 : 0.2–1.0 volts with the idling, engine coolant temp. 60˚C (140˚F) –120˚C (248˚F)
STA–E1 : 6.0 volts or more with the engine cranking
W–E1 : 9.0–14.0 volts with the idling and engine check warning light off
SP1–E1 : Pulse generation with the vehicle moving
STP–E1 : 7.5–14.0 volts with the brake pedal depressed

: Parts Location

Code		See Page	Code		See Page	Code	See Page
A20	D	48 (LHD)	E12	D	69 (RHD)	J17	50 (LHD)
		68 (RHD)	F11		46 (*5)		70 (RHD)
A21	A	48 (LHD)			66 (*14)	J18	50 (LHD)
		68 (RHD)	G1		46 (*5)		70 (RHD)
A22	B	48 (LHD)			66 (*14)	J21	50 (LHD)
		68 (RHD)	I5		47 (*5)		70 (RHD)
A28		48 (LHD)			67 (*14)	J22	50 (LHD)
		68 (RHD)	I10		47 (*5)		70 (RHD)
C3		46 (*5)			67 (*14)	M1	47 (*5)
		66 (*14)	J2	A	47 (*5)		67 (*14)
C9	A	49 (LHD)			67 (*14)	S2	47 (*5)
		69 (RHD)	J3	B	47 (*5)		67 (*14)
C11	C	49 (LHD)			67 (*14)	S18	51 (LHD)
		69 (RHD)	J5		47 (*5)		71 (RHD)
C12	D	49 (LHD)			67 (*14)	T2	47 (*5)
		69 (RHD)	J7		50 (LHD)		67 (*14)
D6		49 (LHD)			70 (RHD)	T3	47 (*5)
		69 (RHD)	J9		50 (LHD)		67 (*14)
E7		46 (*5)			70 (RHD)	T5	47 (*5)
		66 (*14)	J10		50 (LHD)		67 (*14)
E9	A	49 (LHD)			70 (RHD)	T7	47 (*5)
		69 (RHD)	J11		50 (LHD)		67 (*14)
E10	B	49 (LHD)			70 (RHD)	T9	51 (LHD)
		69 (RHD)	J12		50 (LHD)		71 (RHD)
E11	C	49 (LHD)			70 (RHD)	W3	47 (*5)
		69 (RHD)	J14		50 (LHD)		67 (*14)
E12	D	49 (LHD)			70 (RHD)		

: Relay Blocks

Code	See Page	Relay Blocks (Relay Block Location)
2	23	Engine Room R/B (Engine Compartment Left)
4	25	Engine Room R/B No.4 (Engine Compartment Left)

* 1 : LHD 1GR-FE * 2 : LHD 3RZ-FE * 3 : LHD 1KD-FTV * 4 : LHD 1KZ-TE * 5 : LHD 5L-E * 6 : LHD 5-Door * 7 : LHD 3-Door
* 8 : LHD 8Way Power Seat * 9 : LHD Except 8Way Power Seat * 10 : RHD 1GR-FE * 11 : RHD 3RZ-FE * 12 : RHD 1KD-FTV
* 13 : RHD 1KZ-TE * 14 : RHD 5L-E * 15 : RHD 5-Door * 16 : RHD 3-Door * 17 : RHD 8Way Power Seat
* 18 : RHD Except 8Way Power Seat

: **Junction Block and Wire Harness Connector**

Code	See Page	Junction Block and Wire Harness (Connector Location)
IE	26 (LHD)	Engine Room Main Wire and Driver Side J/B (Lower Finish Panel)
	28 (RHD)	
IG	27 (LHD)	Instrument Panel Wire and Driver Side J/B (Lower Finish Panel)
	29 (RHD)	
IJ	27 (LHD)	
	29 (RHD)	
IK	27 (LHD)	
	29 (RHD)	
IL	27 (LHD)	
	29 (RHD)	
1A	32 (LHD)	Instrument Panel Wire and J/B No.1 (Instrument Panel Reinforcement Left)
	32 (RHD)	Instrument Panel Wire and J/B No.1 (Instrument Panel Reinforcement Right)
1E	32 (LHD)	Instrument Panel Wire and J/B No.1 (Instrument Panel Reinforcement Left)
	32 (RHD)	Instrument Panel Wire and J/B No.1 (Instrument Panel Reinforcement Right)
3A	36 (LHD)	Instrument Panel Wire and J/B No.3 (Instrument Panel Reinforcement Right)
	36 (RHD)	Instrument Panel Wire and J/B No.3 (Instrument Panel Reinforcement Left)
3B	36 (LHD)	Instrument Panel Wire and J/B No.3 (Instrument Panel Reinforcement Right)
	36 (RHD)	Instrument Panel Wire and J/B No.3 (Instrument Panel Reinforcement Left)
3C	36 (LHD)	Instrument Panel Wire and J/B No.3 (Instrument Panel Reinforcement Right)
	36 (RHD)	Instrument Panel Wire and J/B No.3 (Instrument Panel Reinforcement Left)
3D	36 (LHD)	Instrument Panel Wire and J/B No.3 (Instrument Panel Reinforcement Right)
	36 (RHD)	Instrument Panel Wire and J/B No.3 (Instrument Panel Reinforcement Left)
3E	36 (LHD)	Instrument Panel Wire and J/B No.3 (Instrument Panel Reinforcement Right)
	36 (RHD)	Instrument Panel Wire and J/B No.3 (Instrument Panel Reinforcement Left)

: **Connector Joining Wire Harness and Wire Harness**

Code	See Page	Joining Wire Harness and Wire Harness (Connector Location)
EB1	86 (*5)	Engine Room Main Wire and Engine Wire (Rear Side of the Engine Room R/B)
	110 (*14)	
IC4	88 (LHD)	Instrument Panel Wire and Engine Room Main Wire (Left Kick Panel)
	112 (RHD)	
IL1	92 (LHD)	Engine Wire and Instrument Panel Wire (Right Side of the Blower Unit)
	116 (RHD)	Engine Wire and Instrument Panel Wire (Left Side of the Blower Unit)
IL2	92 (LHD)	Engine Wire and Instrument Panel Wire (Right Side of the Blower Unit)
	116 (RHD)	Engine Wire and Instrument Panel Wire (Left Side of the Blower Unit)
IL3	92 (LHD)	Engine Wire and Instrument Panel Wire (Right Side of the Blower Unit)
	116 (RHD)	Engine Wire and Instrument Panel Wire (Left Side of the Blower Unit)
IM1	92 (LHD)	Instrument Panel Wire and Engine Room Main Wire (Right Kick Panel)
	116 (RHD)	
IM4	92 (LHD)	

: **Ground Points**

Code	See Page	Ground Points Location
EB	86 (*5)	Front Left Fender
	110 (*14)	
EI	86 (*5)	Rear Part of Cylinder Block
	110 (*14)	
IJ	88 (LHD)	Left Kick Panel
	112 (RHD)	Right Kick Panel

* 1 : LHD 1GR–FE * 2 : LHD 3RZ–FE * 3 : LHD 1KD–FTV * 4 : LHD 1KZ–TE * 5 : LHD 5L–E * 6 : LHD 5–Door * 7 : LHD 3–Door
* 8 : LHD 8Way Power Seat * 9 : LHD Except 8Way Power Seat * 10 : RHD 1GR–FE * 11 : RHD 3RZ–FE * 12 : RHD 1KD–FTV
* 13 : RHD 1KZ–TE * 14 : RHD 5L–E * 15 : RHD 5–Door * 16 : RHD 3–Door * 17 : RHD 8Way Power Seat
* 18 : RHD Except 8Way Power Seat

: **Splice Points**

Code	See Page	Wire Harness with Splice Points	Code	See Page	Wire Harness with Splice Points
I8	90 (LHD)	Engine Wire	I8	114 (RHD)	Engine Wire

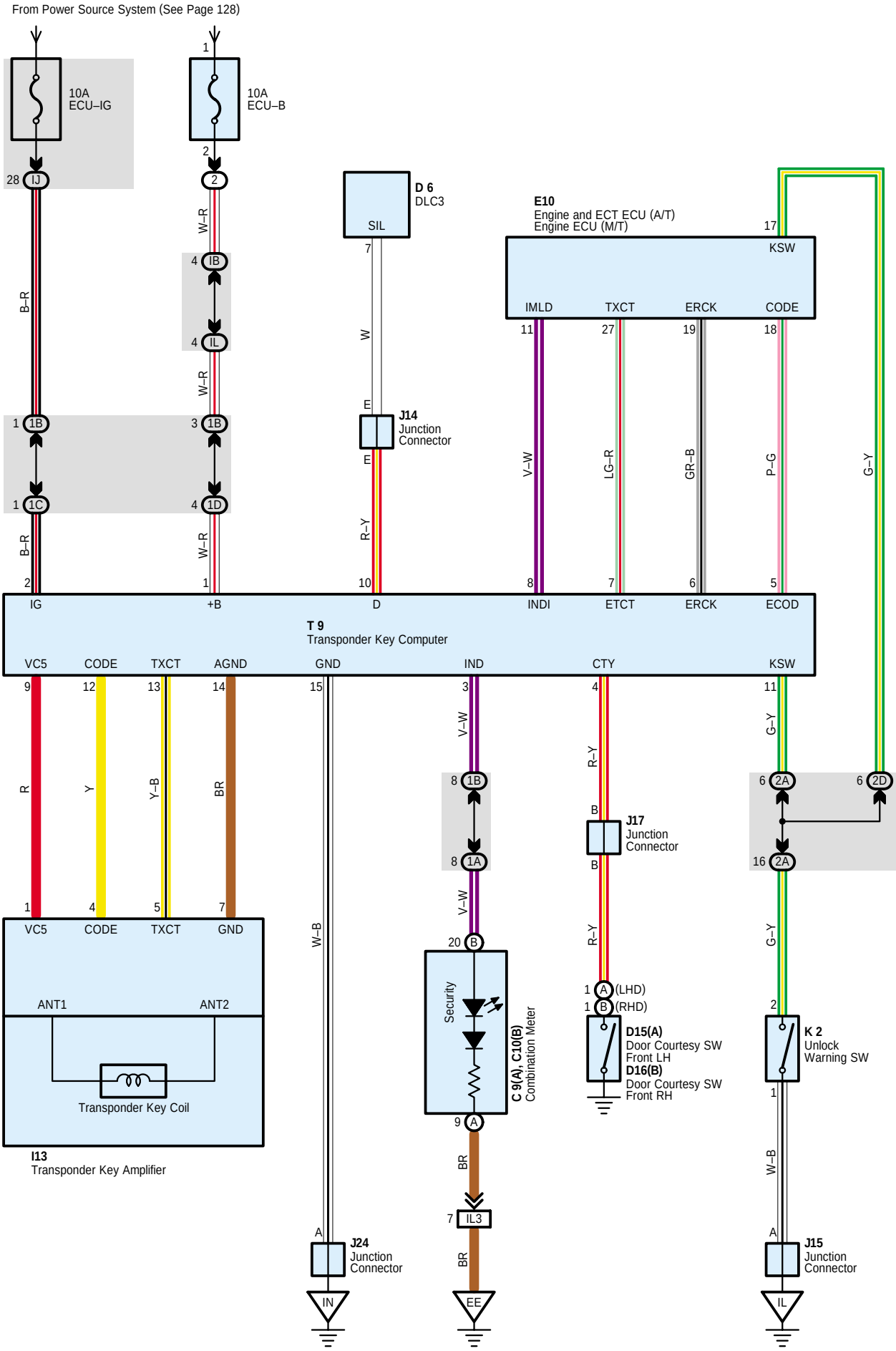
From Power Source System (See Page 128)
10A
ECU–IG
10A
ECU–B
D 6
DLC3
SIL
E10
Engine and ECT ECU (A/T)
Engine ECU (M/T)
KSW
IMLD
TXCT
ERCK
CODE
J14
Junction
Connector
IG
+B
D
INDI
ETCT
ERCK
ECOD
T 9
Transponder Key Computer
VC5
CODE
TXCT
AGND
GND
IND
CTY
KSW
VC5
CODE
TXCT
GND
ANT1
ANT2
Transponder Key Coil
I13
Transponder Key Amplifier
Security
C 9(A), C10(B)
Combination Meter
J17
Junction
Connector
(LHD)
(RHD)
D15(A)
Door Courtesy SW
Front LH
D16(B)
Door Courtesy SW
Front RH
K 2
Unlock
Warning SW
J24
Junction
Connector
IN
IL3
EE
J15
Junction
Connector
IL

Service Hints

T9 Transponder Key Computer

1–Ground : Always approx. 12 volts
15–Ground : Always continuity
2–Ground : Approx. 12 volts with ignition SW at ON position

: Parts Location

Code		See Page	Code		See Page	Code	See Page
C9	A	49 (LHD)	D16	B	74 (*16)	J17	50 (LHD)
		69 (RHD)	E10		49 (LHD)		70 (RHD)
C10	B	49 (LHD)			69 (RHD)	J24	50 (LHD)
		69 (RHD)	I13		50 (LHD)		70 (RHD)
D6		49 (LHD)			70 (RHD)	K2	50 (LHD)
		69 (RHD)	J14		50 (LHD)		70 (RHD)
D15	A	52 (*6)			70 (RHD)	T9	51 (LHD)
		54 (*7)	J15		50 (LHD)		71 (RHD)
D16	B	72 (*15)			70 (RHD)		

: Relay Blocks

Code	See Page	Relay Blocks (Relay Block Location)
2	23	Engine Room R/B (Engine Compartment Left)

: Junction Block and Wire Harness Connector

Code	See Page	Junction Block and Wire Harness (Connector Location)
IB	26 (LHD)	Engine Room Main Wire and Driver Side J/B (Lower Finish Panel)
	28 (RHD)	
IJ	27 (LHD)	Instrument Panel Wire and Driver Side J/B (Lower Finish Panel)
	29 (RHD)	
IL	27 (LHD)	
	29 (RHD)	
1A	32 (LHD)	Instrument Panel Wire and J/B No.1 (Instrument Panel Reinforcement Left)
	32 (RHD)	Instrument Panel Wire and J/B No.1 (Instrument Panel Reinforcement Right)
1B	32 (LHD)	Instrument Panel Wire and J/B No.1 (Instrument Panel Reinforcement Left)
	32 (RHD)	Instrument Panel Wire and J/B No.1 (Instrument Panel Reinforcement Right)
1C	32 (LHD)	Instrument Panel Wire and J/B No.1 (Instrument Panel Reinforcement Left)
	32 (RHD)	Instrument Panel Wire and J/B No.1 (Instrument Panel Reinforcement Right)
1D	32 (LHD)	Instrument Panel Wire and J/B No.1 (Instrument Panel Reinforcement Left)
	32 (RHD)	Instrument Panel Wire and J/B No.1 (Instrument Panel Reinforcement Right)
2A	34	Instrument Panel Wire and J/B No.2 (Instrument Panel Reinforcement Center)
2D		

: Connector Joining Wire Harness and Wire Harness

Code	See Page	Joining Wire Harness and Wire Harness (Connector Location)
IL3	92 (LHD)	Engine Wire and Instrument Panel Wire (Right Side of the Blower Unit)
	116 (RHD)	Engine Wire and Instrument Panel Wire (Left Side of the Blower Unit)

* 1 : LHD 1GR–FE * 2 : LHD 3RZ–FE * 3 : LHD 1KD–FTV * 4 : LHD 1KZ–TE * 5 : LHD 5L–E * 6 : LHD 5–Door * 7 : LHD 3–Door
* 8 : LHD 8Way Power Seat * 9 : LHD Except 8Way Power Seat * 10 : RHD 1GR–FE * 11 : RHD 3RZ–FE * 12 : RHD 1KD–FTV
* 13 : RHD 1KZ–TE * 14 : RHD 5L–E * 15 : RHD 5–Door * 16 : RHD 3–Door * 17 : RHD 8Way Power Seat
* 18 : RHD Except 8Way Power Seat

▽ : **Ground Points**

Code	See Page	Ground Points Location
EE	80 (*2)	Intake Manifold
	104 (*11)	
IL	88 (LHD)	Near the Right Side of Steering Column
	112 (RHD)	Instrument Panel Brace RH
IN	88 (LHD)	Right Kick Panel
	112 (RHD)	Left Kick Panel

* 1 : LHD 1GR-FE * 2 : LHD 3RZ-FE * 3 : LHD 1KD-FTV * 4 : LHD 1KZ-TE * 5 : LHD 5L-E * 6 : LHD 5-Door * 7 : LHD 3-Door
* 8 : LHD 8Way Power Seat * 9 : LHD Except 8Way Power Seat * 10 : RHD 1GR-FE * 11 : RHD 3RZ-FE * 12 : RHD 1KD-FTV
* 13 : RHD 1KZ-TE * 14 : RHD 5L-E * 15 : RHD 5-Door * 16 : RHD 3-Door * 17 : RHD 8Way Power Seat
* 18 : RHD Except 8Way Power Seat

Engine Immobiliser System (Except 3RZ–FE Unleaded Gasoline)

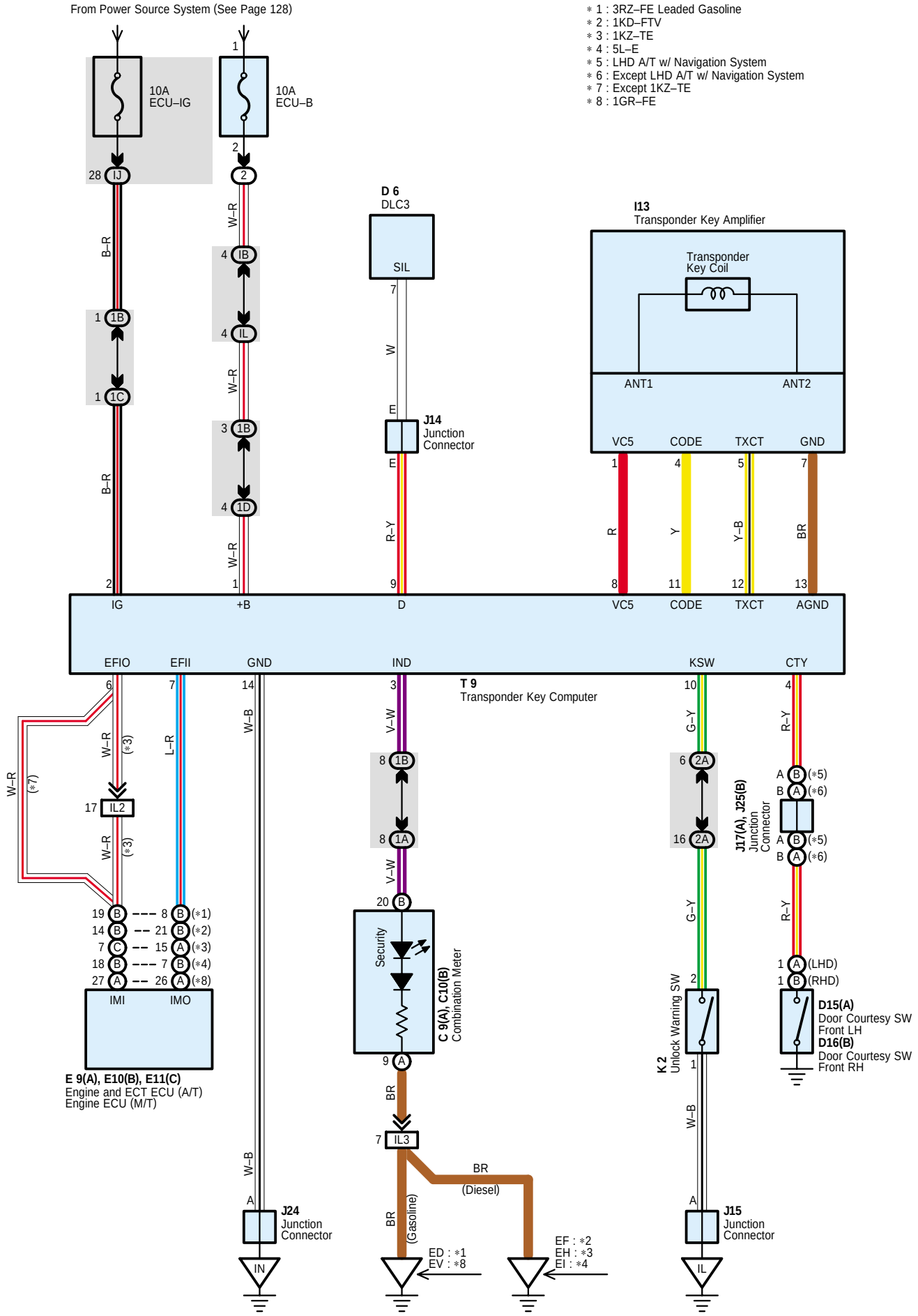

Service Hints

T9 Transponder Key Computer

1–Ground : Always approx. 12 volts
14–Ground : Always continuity
2–Ground : Approx. 12 volts with ignition SW at ON position

: Parts Location

Code		See Page	Code		See Page	Code		See Page
C9	A	49 (LHD)	E9	A	69 (RHD)	J17	A	50 (LHD)
		69 (RHD)	E10	B	49 (LHD)			70 (RHD)
C10	B	49 (LHD)			69 (RHD)	J24		50 (LHD)
		69 (RHD)	E11	C	49 (LHD)			70 (RHD)
D6		49 (LHD)			69 (RHD)	J25	B	50 (LHD)
		69 (RHD)	I13		50 (LHD)	K2		50 (LHD)
D15	A	52 (*6)			70 (RHD)			70 (RHD)
		54 (*7)	J14		50 (LHD)	T9		51 (LHD)
D16	B	72 (*15)			70 (RHD)			71 (RHD)
		74 (*16)	J15		50 (LHD)			
E9	A	49 (LHD)			70 (RHD)			

: Relay Blocks

Code	See Page	Relay Blocks (Relay Block Location)
2	23	Engine Room R/B (Engine Compartment Left)

: Junction Block and Wire Harness Connector

Code	See Page	Junction Block and Wire Harness (Connector Location)
IB	26 (LHD)	Engine Room Main Wire and Driver Side J/B (Lower Finish Panel)
	28 (RHD)	
IJ	27 (LHD)	Instrument Panel Wire and Driver Side J/B (Lower Finish Panel)
	29 (RHD)	
IL	27 (LHD)	
	29 (RHD)	
1A	32 (LHD)	Instrument Panel Wire and J/B No.1 (Instrument Panel Reinforcement Left)
	32 (RHD)	Instrument Panel Wire and J/B No.1 (Instrument Panel Reinforcement Right)
1B	32 (LHD)	Instrument Panel Wire and J/B No.1 (Instrument Panel Reinforcement Left)
	32 (RHD)	Instrument Panel Wire and J/B No.1 (Instrument Panel Reinforcement Right)
1C	32 (LHD)	Instrument Panel Wire and J/B No.1 (Instrument Panel Reinforcement Left)
	32 (RHD)	Instrument Panel Wire and J/B No.1 (Instrument Panel Reinforcement Right)
1D	32 (LHD)	Instrument Panel Wire and J/B No.1 (Instrument Panel Reinforcement Left)
	32 (RHD)	Instrument Panel Wire and J/B No.1 (Instrument Panel Reinforcement Right)
2A	34	Instrument Panel Wire and J/B No.2 (Instrument Panel Reinforcement Center)

: Connector Joining Wire Harness and Wire Harness

Code	See Page	Joining Wire Harness and Wire Harness (Connector Location)
IL2	92 (LHD)	Engine Wire and Instrument Panel Wire (Right Side of the Blower Unit)
	116 (RHD)	Engine Wire and Instrument Panel Wire (Left Side of the Blower Unit)
IL3	92 (LHD)	Engine Wire and Instrument Panel Wire (Right Side of the Blower Unit)
	116 (RHD)	Engine Wire and Instrument Panel Wire (Left Side of the Blower Unit)

* 1 : LHD 1GR–FE * 2 : LHD 3RZ–FE * 3 : LHD 1KD–FTV * 4 : LHD 1KZ–TE * 5 : LHD 5L–E * 6 : LHD 5–Door * 7 : LHD 3–Door
* 8 : LHD 8Way Power Seat * 9 : LHD Except 8Way Power Seat * 10 : RHD 1GR–FE * 11 : RHD 3RZ–FE * 12 : RHD 1KD–FTV
* 13 : RHD 1KZ–TE * 14 : RHD 5L–E * 15 : RHD 5–Door * 16 : RHD 3–Door * 17 : RHD 8Way Power Seat
* 18 : RHD Except 8Way Power Seat

▽ : **Ground Points**

Code	See Page	Ground Points Location
ED	80 (*2)	Ignition Coil Braket
	104 (*11)	
EF	82 (*3)	Rear Part of Cylinder Block
	106 (*12)	
EH	84 (*4)	
	108 (*13)	
EI	86 (*5)	
	110 (*14)	
EV	78 (*1)	Rear Side of Left Bank Cylinder Block
	102 (*10)	
IL	88 (LHD)	Near the Right Side of Steering Column
	112 (RHD)	Instrument Panel Brace RH
IN	88 (LHD)	Right Kick Panel
	112 (RHD)	Left Kick Panel

* 1 : LHD 1GR-FE * 2 : LHD 3RZ-FE * 3 : LHD 1KD-FTV * 4 : LHD 1KZ-TE * 5 : LHD 5L-E * 6 : LHD 5-Door * 7 : LHD 3-Door
* 8 : LHD 8Way Power Seat * 9 : LHD Except 8Way Power Seat * 10 : RHD 1GR-FE * 11 : RHD 3RZ-FE * 12 : RHD 1KD-FTV
* 13 : RHD 1KZ-TE * 14 : RHD 5L-E * 15 : RHD 5-Door * 16 : RHD 3-Door * 17 : RHD 8Way Power Seat
* 18 : RHD Except 8Way Power Seat

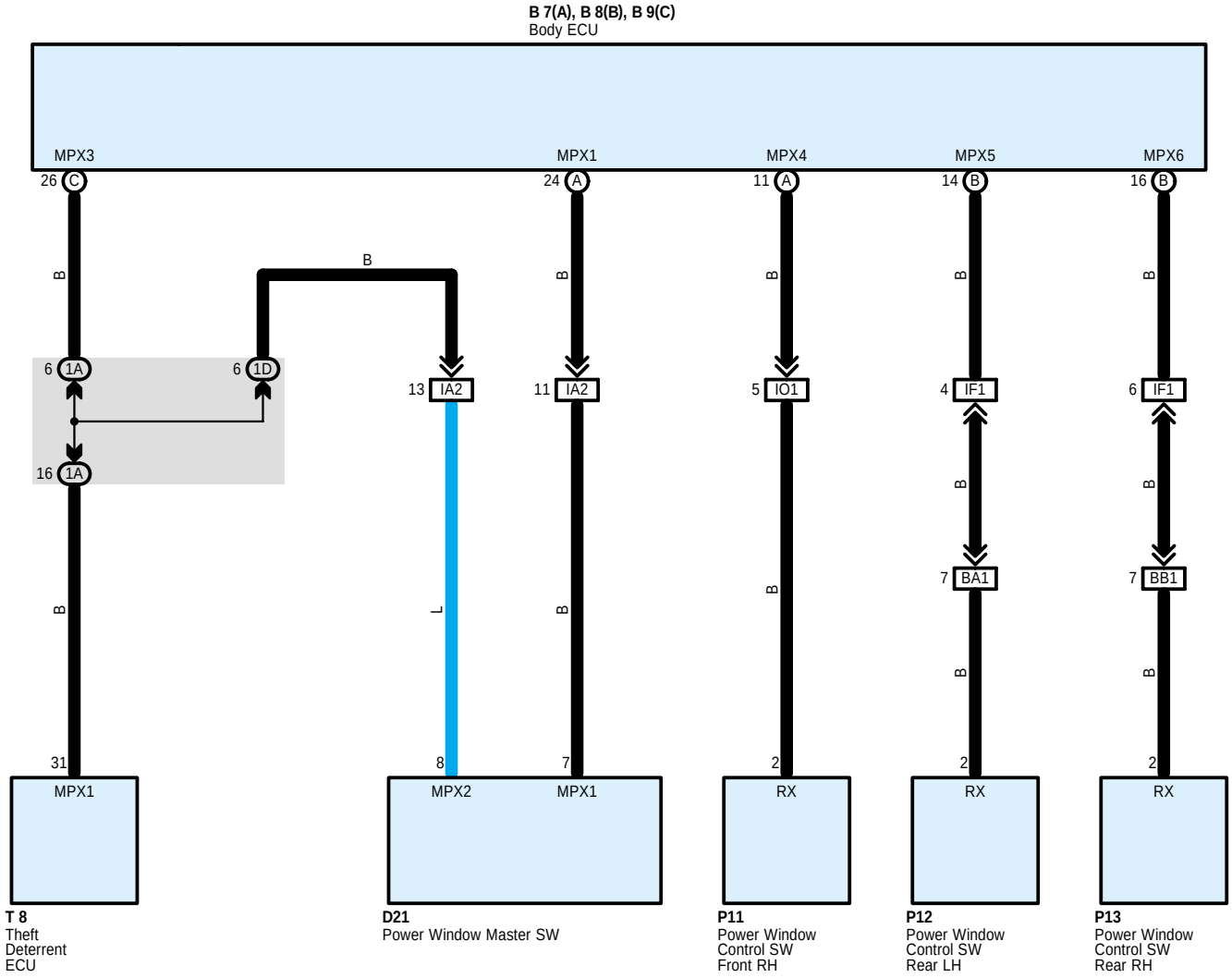
B 7(A), B 8(B), B 9(C)
Body ECU
MPX3
MPX1
MPX4
MPX5
MPX6
26 C
24 A
11 A
14 B
16 B
B
B
B
B
B
6 1A
6 1D
16 1A
13 IA2
11 IA2
5 IO1
4 IF1
6 IF1
B
B
7 BA1
7 BB1
B
L
B
B
B
31
8
7
2
2
2
MPX1
MPX2
MPX1
RX
RX
RX
T 8
Theft
Deterrent
ECU
D21
Power Window Master SW
P11
Power Window
Control SW
Front RH
P12
Power Window
Control SW
Rear LH
P13
Power Window
Control SW
Rear RH

Multiplex Communication System Includes Following Systems

- ∗ **Door Lock Control**
- ∗ **Double Locking**
- ∗ **Headlight**
- ∗ **Interior Light**
- ∗ **Key Reminder**
- ∗ **Light Auto Turn Off**
- ∗ **Power Window**
- ∗ **Seat Belt Warning**
- ∗ **Theft Deterrent**
- ∗ **Wireless Door Lock Control**

○ : **Parts Location**

Code		See Page	Code	See Page	Code	See Page
B7	A	48 (LHD)	D21	54 (*7)	P13	53 (*6)
B8	B	48 (LHD)	P11	53 (*6)	T8	51 (LHD)
B9	C	48 (LHD)		55 (*7)		
D21		52 (*6)	P12	53 (*6)		

: **Junction Block and Wire Harness Connector**

Code	See Page	Junction Block and Wire Harness (Connector Location)
1A	32 (LHD)	Instrument Panel Wire and J/B No.1 (Instrument Panel Reinforcement Left)
1D		

: **Connector Joining Wire Harness and Wire Harness**

Code	See Page	Joining Wire Harness and Wire Harness (Connector Location)
IA2	88 (LHD)	Front Door LH Wire and Instrument Panel Wire (Left Kick Panel)
IF1	90 (LHD)	Instrument Panel Wire and Instrument Panel Wire (Near the J/B No.1)
IO1	94 (LHD)	Front Door RH Wire and Instrument Panel Wire (Right Kick Panel)
BA1	96 (*6)	Rear Door LH Wire and Instrument Panel Wire (Center Pillar LH)
BB1	96 (*6)	Rear Door RH Wire and Instrument Panel Wire (Center Pillar RH)

* 1 : LHD 1GR-FE * 2 : LHD 3RZ-FE * 3 : LHD 1KD-FTV * 4 : LHD 1KZ-TE * 5 : LHD 5L-E * 6 : LHD 5-Door * 7 : LHD 3-Door
* 8 : LHD 8Way Power Seat * 9 : LHD Except 8Way Power Seat * 10 : RHD 1GR-FE * 11 : RHD 3RZ-FE * 12 : RHD 1KD-FTV
* 13 : RHD 1KZ-TE * 14 : RHD 5L-E * 15 : RHD 5-Door * 16 : RHD 3-Door * 17 : RHD 8Way Power Seat
* 18 : RHD Except 8Way Power Seat

Multiplex Communication System (LHD)

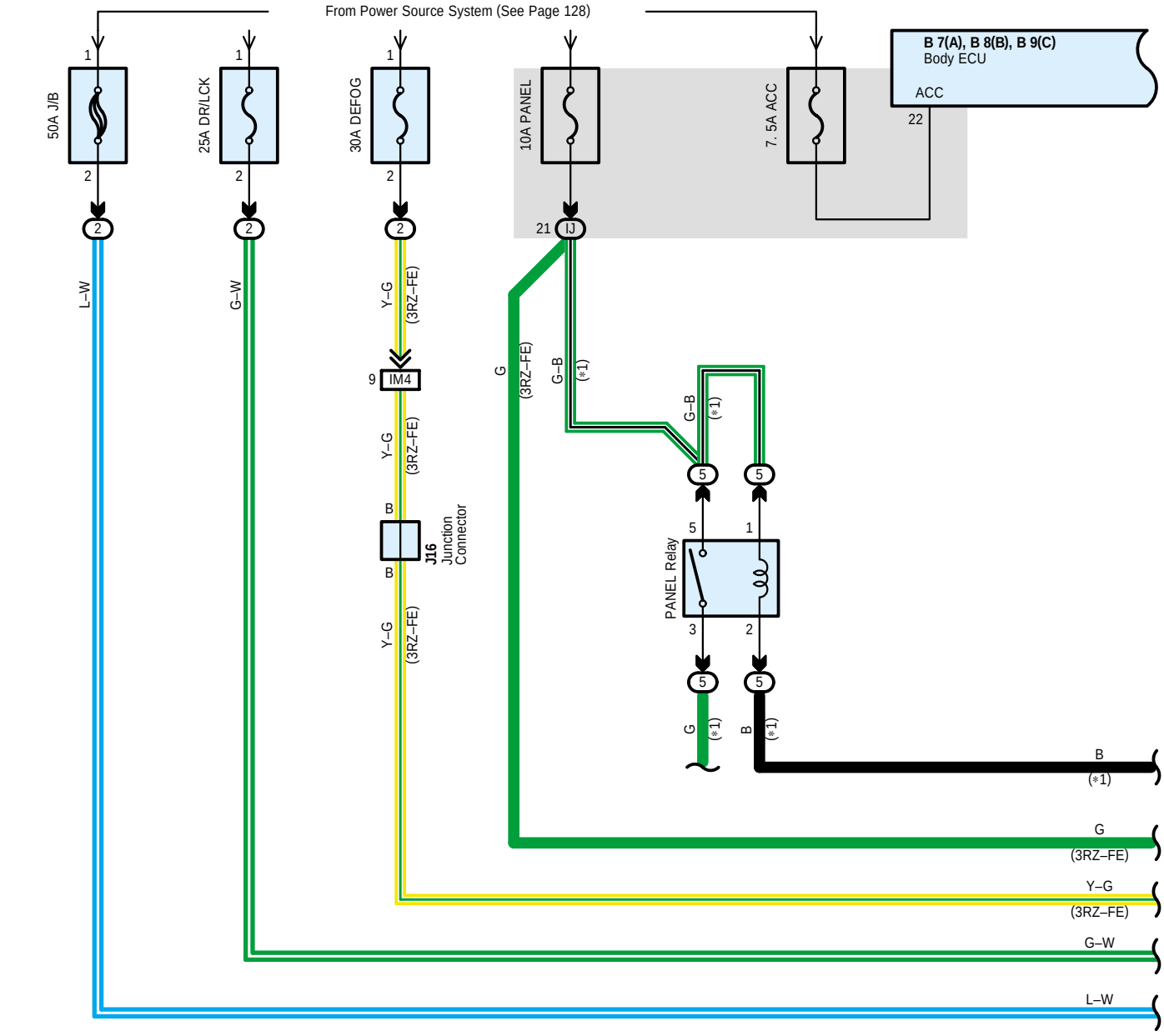

* 1 : w/ Daytime Running Light

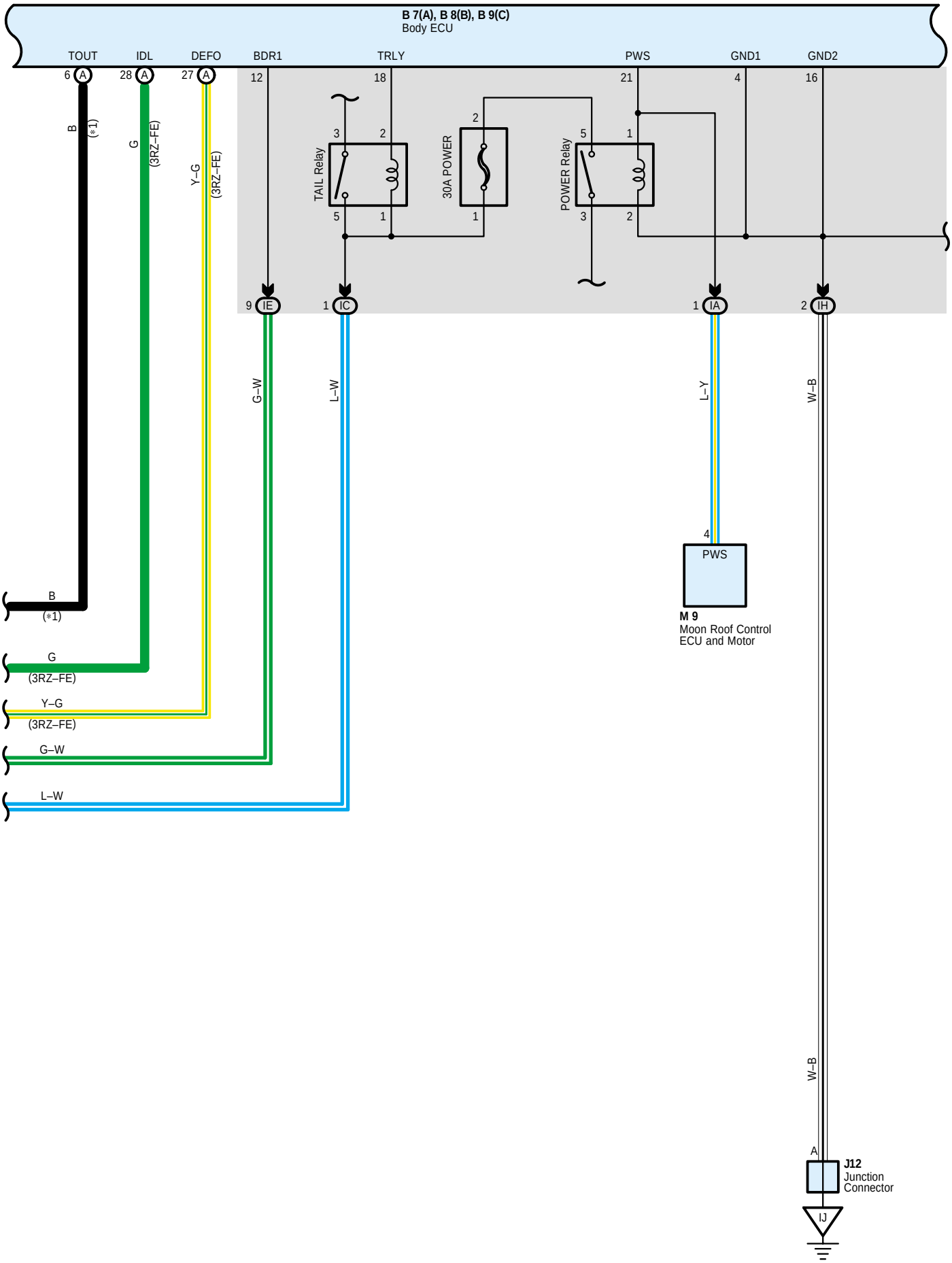
B 7(A), B 8(B), B 9(C)
Body ECU
TOUT
IDL
DEFO
BDR1
TRLY
PWS
GND1
GND2
6 A
28 A
27 A
12
18
21
4
16
B
(*1)
G
(3RZ–FE)
Y–G
(3RZ–FE)
TAIL Relay
30A POWER
POWER Relay
9 IE
1 IC
1 IA
2 IH
G–W
L–W
L–Y
W–B
4
PWS
M 9
Moon Roof Control
ECU and Motor
B
(*1)
G
(3RZ–FE)
Y–G
(3RZ–FE)
G–W
L–W
W–B
A
J12
Junction
Connector
IJ

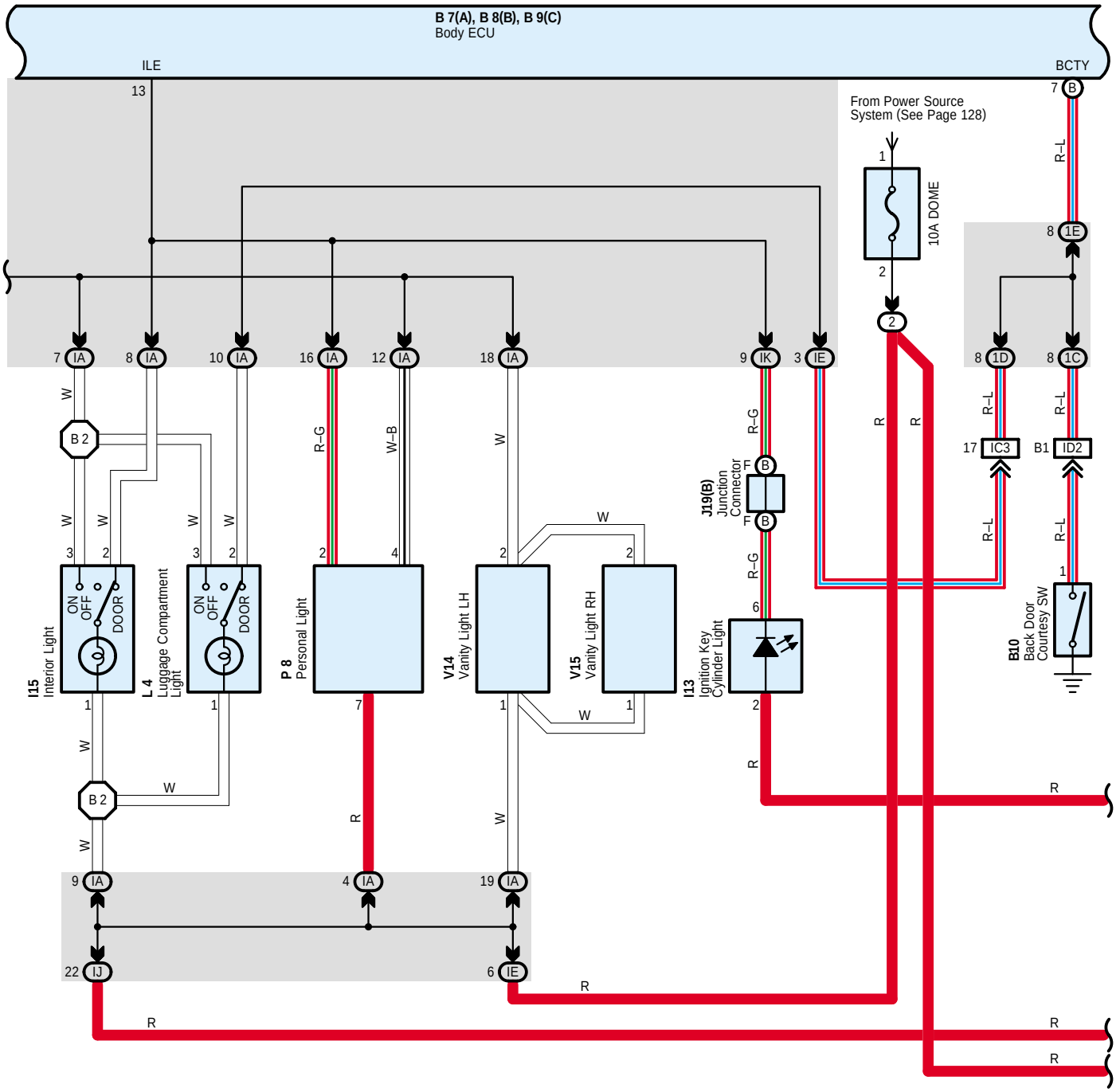
B 7(A), B 8(B), B 9(C)
Body ECU
ILE
BCTY
From Power Source System (See Page 128)
10A DOME
I15 Interior Light
L 4 Luggage Compartment Light
P 8 Personal Light
V14 Vanity Light LH
V15 Vanity Light RH
I13 Ignition Key Cylinder Light
J19(B) Junction Connector
B10 Back Door Courtesy SW
ON
OFF
DOOR

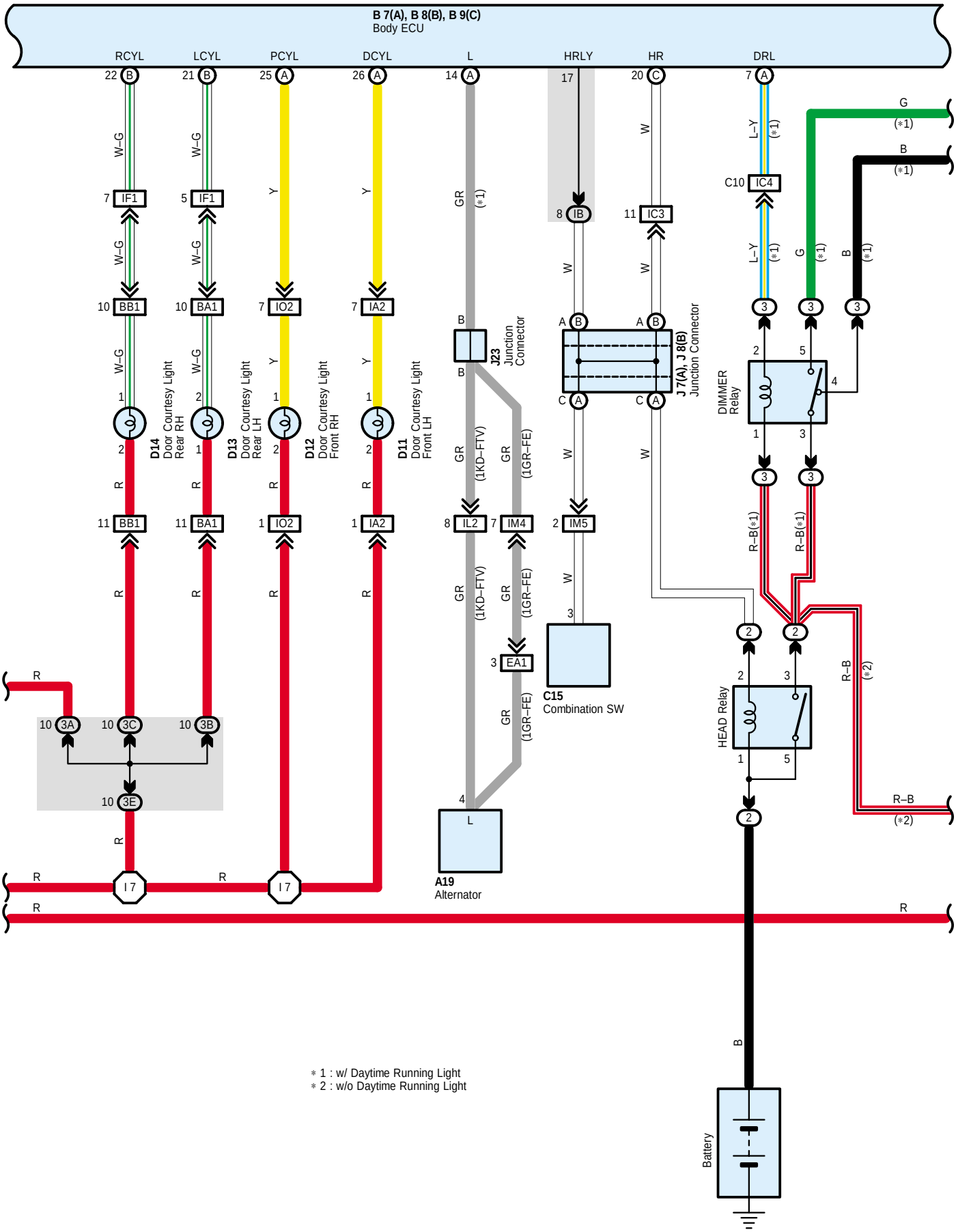
B 7(A), B 8(B), B 9(C)
Body ECU
RCYL
LCYL
PCYL
DCYL
L
HRLY
HR
DRL
D14 Door Courtesy Light Rear RH
D13 Door Courtesy Light Rear LH
D12 Door Courtesy Light Front RH
D11 Door Courtesy Light Front LH
J23 Junction Connector
J 7(A), J 8(B) Junction Connector
DIMMER Relay
HEAD Relay
C15 Combination SW
A19 Alternator
Battery
* 1 : w/ Daytime Running Light
* 2 : w/o Daytime Running Light

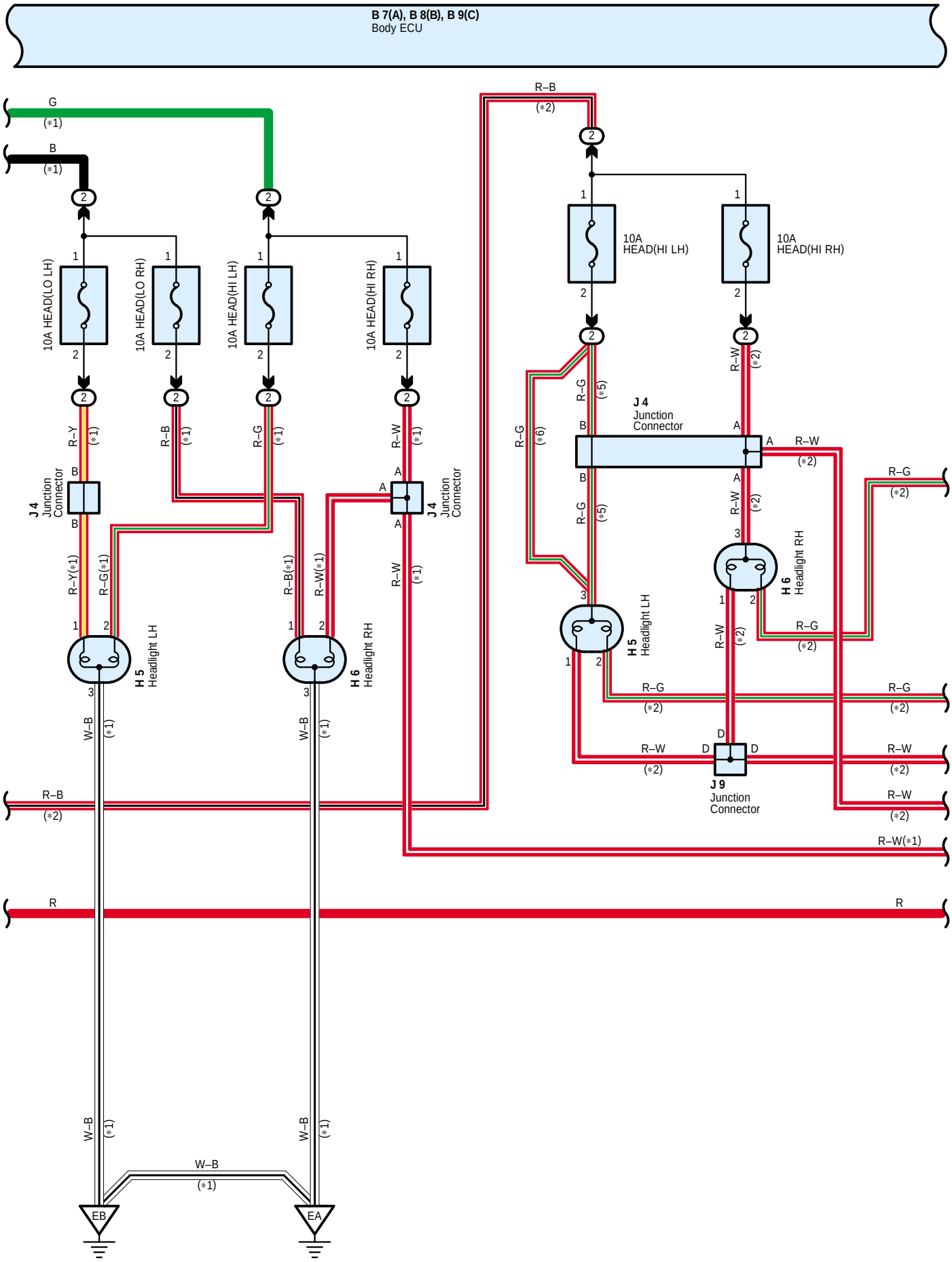
B 7(A), B 8(B), B 9(C)
Body ECU
G
(*1)
B
(*1)
10A HEAD(LO LH)
10A HEAD(LO RH)
10A HEAD(HI LH)
10A HEAD(HI RH)
R–Y
R–B
R–G
R–W
J 4
Junction Connector
R–Y(*1)
R–G(*1)
R–B(*1)
R–W(*1)
H 5
Headlight LH
H 6
Headlight RH
W–B
R–B
(*2)
R
EB
EA
10A HEAD(HI LH)
10A HEAD(HI RH)
R–G
(*5)
(*6)
R–W
(*2)
J 9
Junction Connector

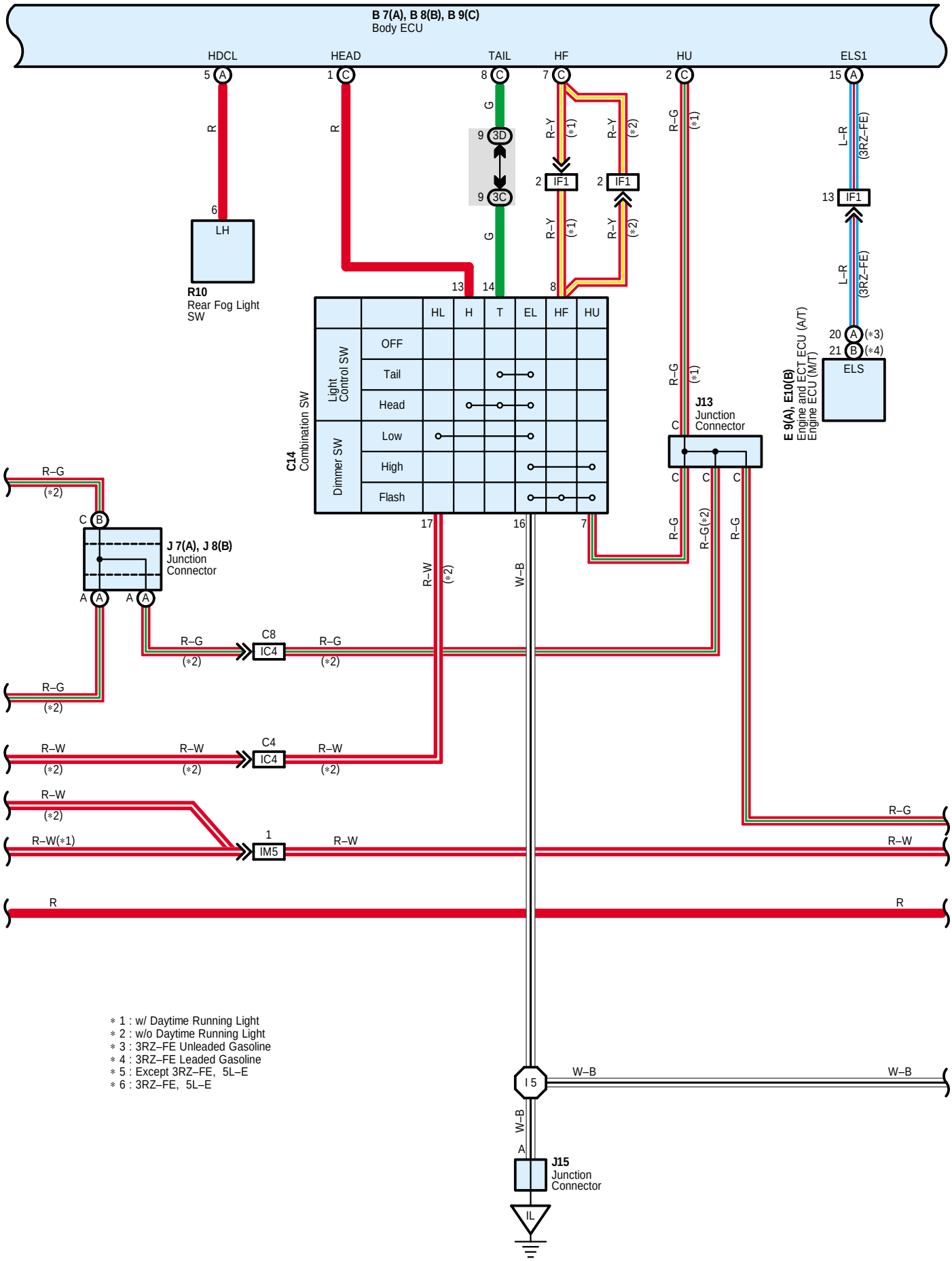

* 1 : w/ Daytime Running Light
* 2 : w/o Daytime Running Light
* 3 : 3RZ–FE Unleaded Gasoline
* 4 : 3RZ–FE Leaded Gasoline
* 5 : Except 3RZ–FE, 5L–E
* 6 : 3RZ–FE, 5L–E

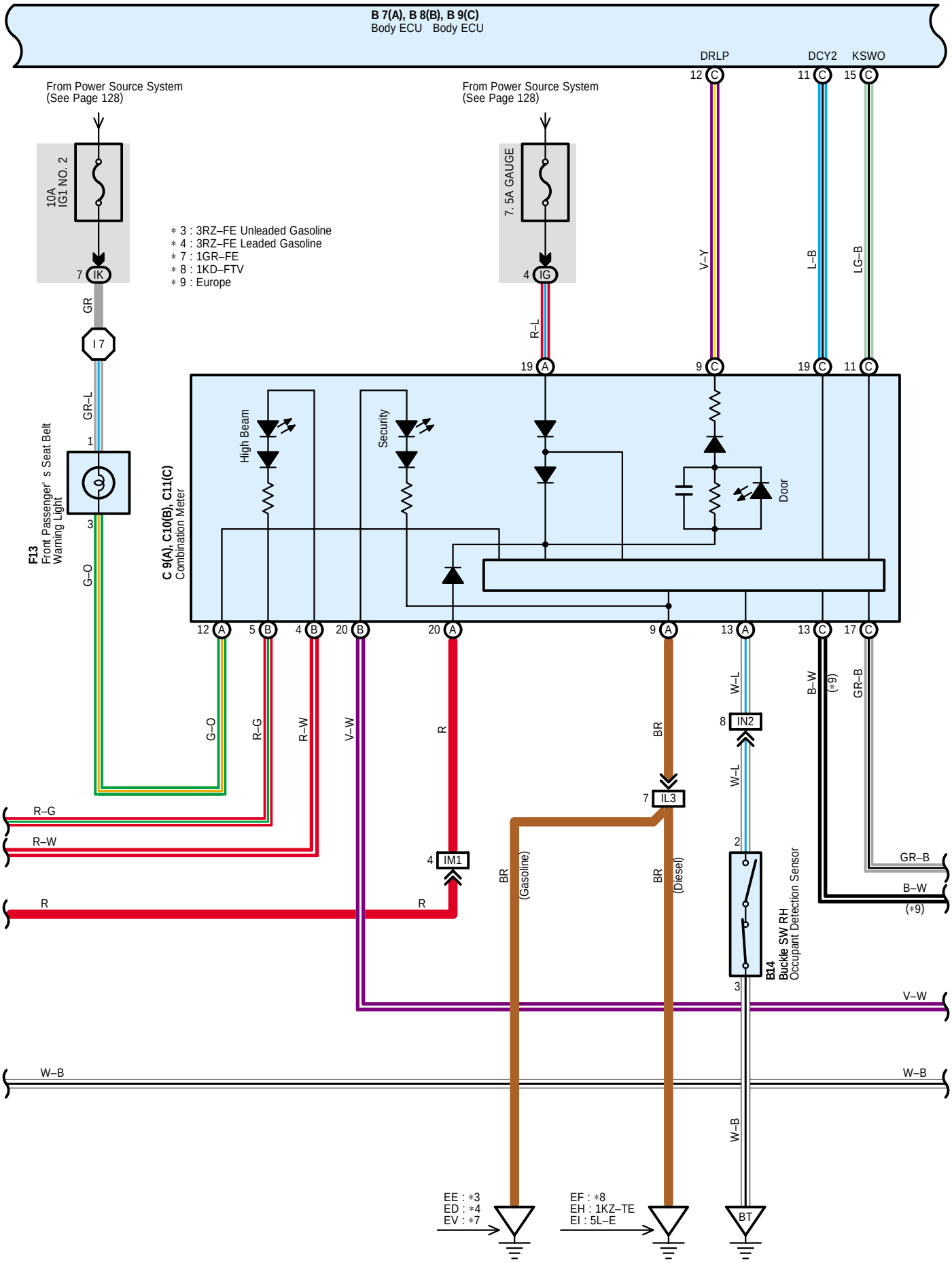
B 7(A), B 8(B), B 9(C)
Body ECU Body ECU
DRLP
DCY2
KSWO
From Power Source System
(See Page 128)
From Power Source System
(See Page 128)
10A
IG1 NO. 2
7. 5A GAUGE
* 3 : 3RZ–FE Unleaded Gasoline
* 4 : 3RZ–FE Leaded Gasoline
* 7 : 1GR–FE
* 8 : 1KD–FTV
* 9 : Europe
IK
IG
GR
I 7
GR–L
R–L
V–Y
L–B
LG–B
F13
Front Passenger' s Seat Belt
Warning Light
G–O
C 9(A), C10(B), C11(C)
Combination Meter
High Beam
Security
Door
R–G
R–W
V–W
R
BR
W–L
B–W
(*9)
GR–B
IN2
IL3
IM1
BR
(Gasoline)
BR
(Diesel)
B14
Buckle SW RH
Occupant Detection Sensor
W–B
EE : *3
ED : *4
EV : *7
EF : *8
EH : 1KZ–TE
EI : 5L–E
BT

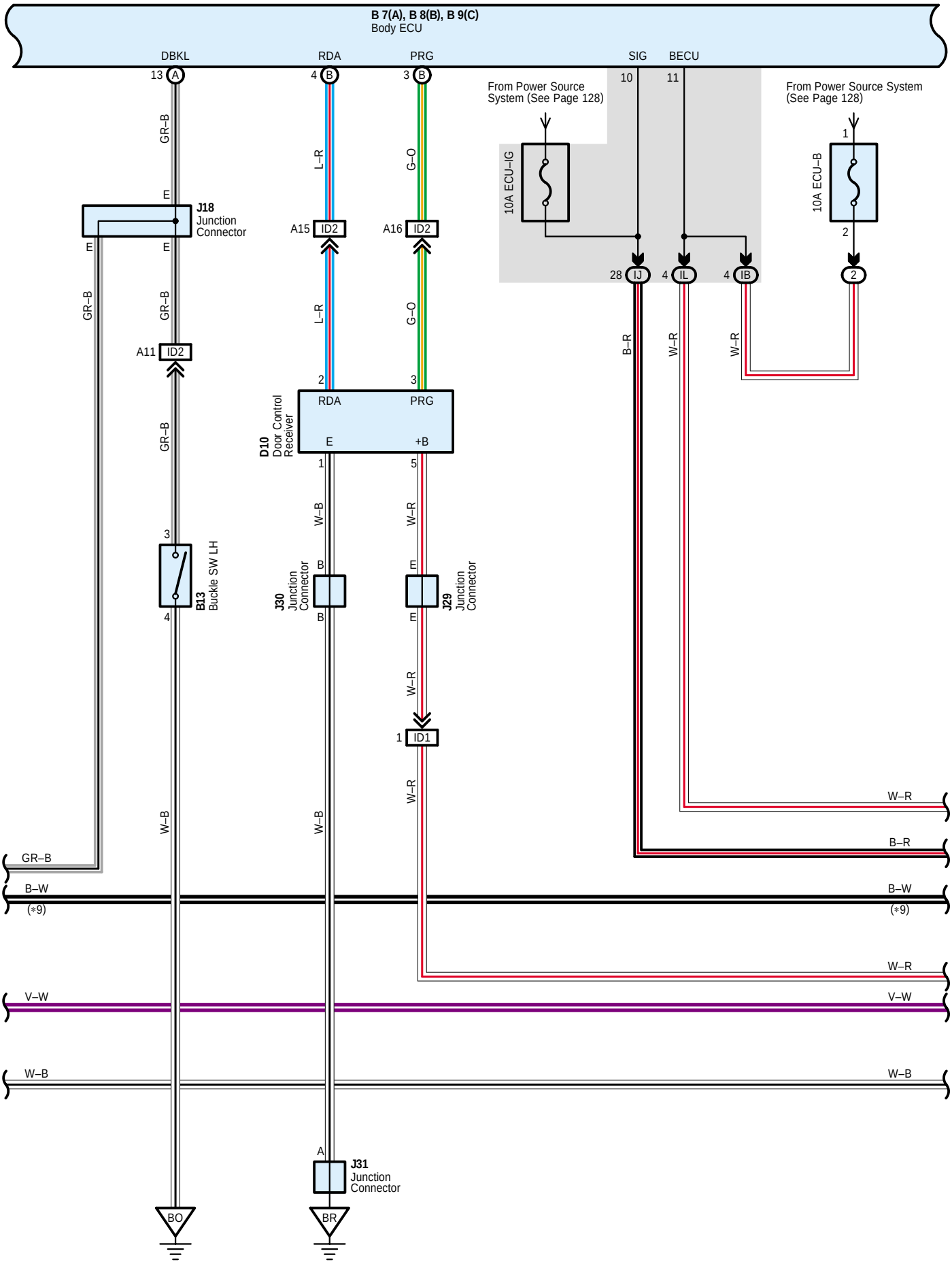
B 7(A), B 8(B), B 9(C)
Body ECU
DBKL
RDA
PRG
SIG
BECU
13 A
4 B
3 B
10
11
From Power Source System (See Page 128)
From Power Source System (See Page 128)
10A ECU–IG
10A ECU–B
1
2
28 IJ
4 IL
4 IB
2
GR–B
L–R
G–O
E
J18
Junction Connector
A15 ID2
A16 ID2
B–R
W–R
A11 ID2
2
3
RDA
PRG
D10
Door Control Receiver
E
+B
1
5
W–B
W–R
3
B13
Buckle SW LH
4
B
J30
Junction Connector
J29
Junction Connector
1 ID1
GR–B
B–W
(*9)
V–W
W–B
A
J31
Junction Connector
BO
BR

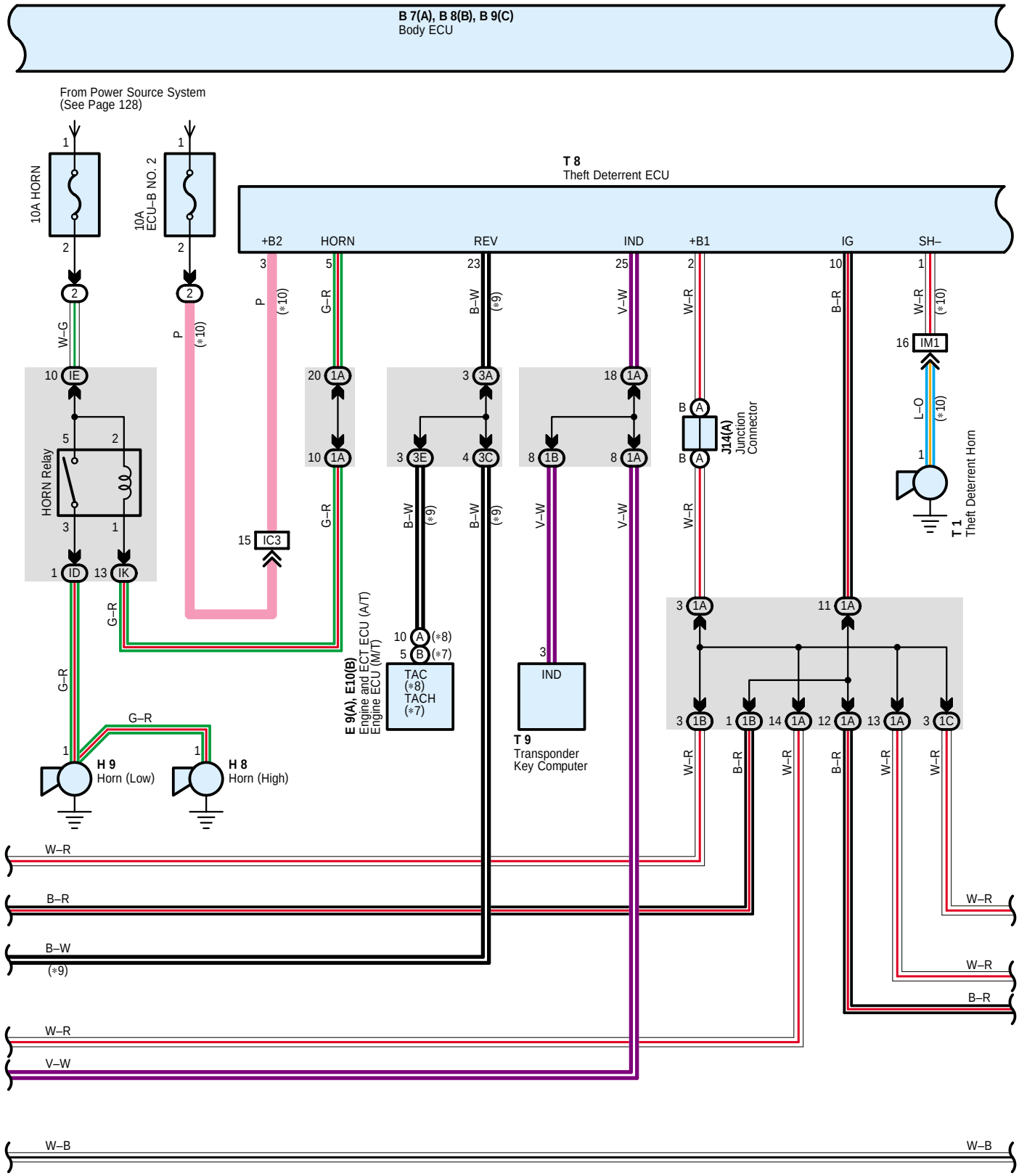

* 7 : 1GR–FE
* 8 : 1KD–FTV
* 9 : Europe
*10 : Except Europe
*11 : 3–Door
*12 : 5–Door

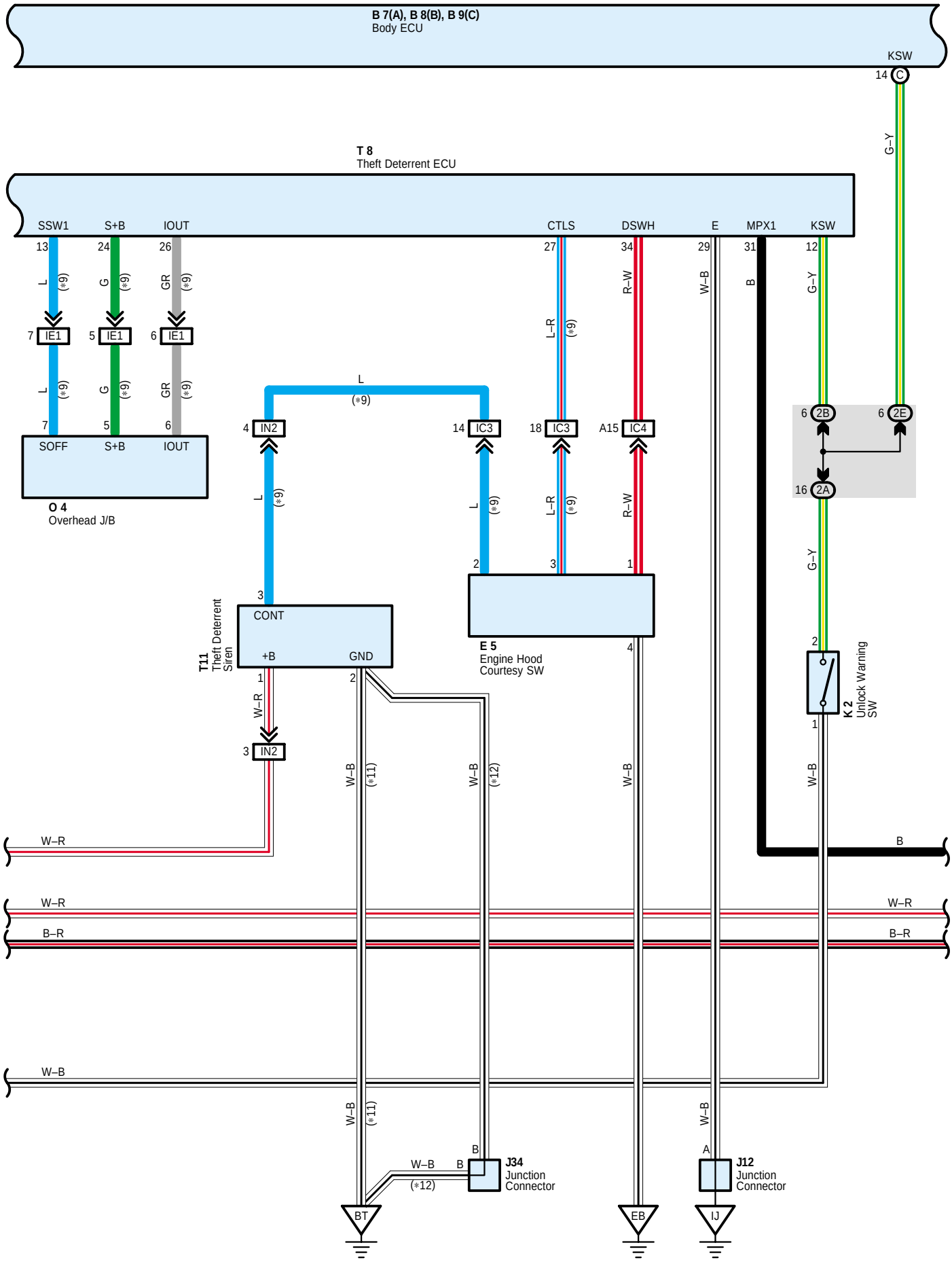
B 7(A), B 8(B), B 9(C)
Body ECU
KSW
14 C
G–Y
T 8
Theft Deterrent ECU
SSW1
S+B
IOUT
CTLS
DSWH
E
MPX1
KSW
13
24
26
27
34
29
31
12
L
G
GR
L–R
R–W
W–B
B
G–Y
(*9)
7 IE1
5 IE1
6 IE1
7
5
6
SOFF
S+B
IOUT
O 4
Overhead J/B
4 IN2
14 IC3
18 IC3
A15 IC4
6 2B
6 2E
16 2A
3
CONT
+B
GND
T11
Theft Deterrent
Siren
1
2
W–R
3 IN2
2
3
1
E 5
Engine Hood
Courtesy SW
4
2
1
K 2
Unlock Warning
SW
W–B
(*11)
(*12)
W–R
B–R
B
BT
EB
IJ
A
J34
Junction
Connector
J12
Junction
Connector

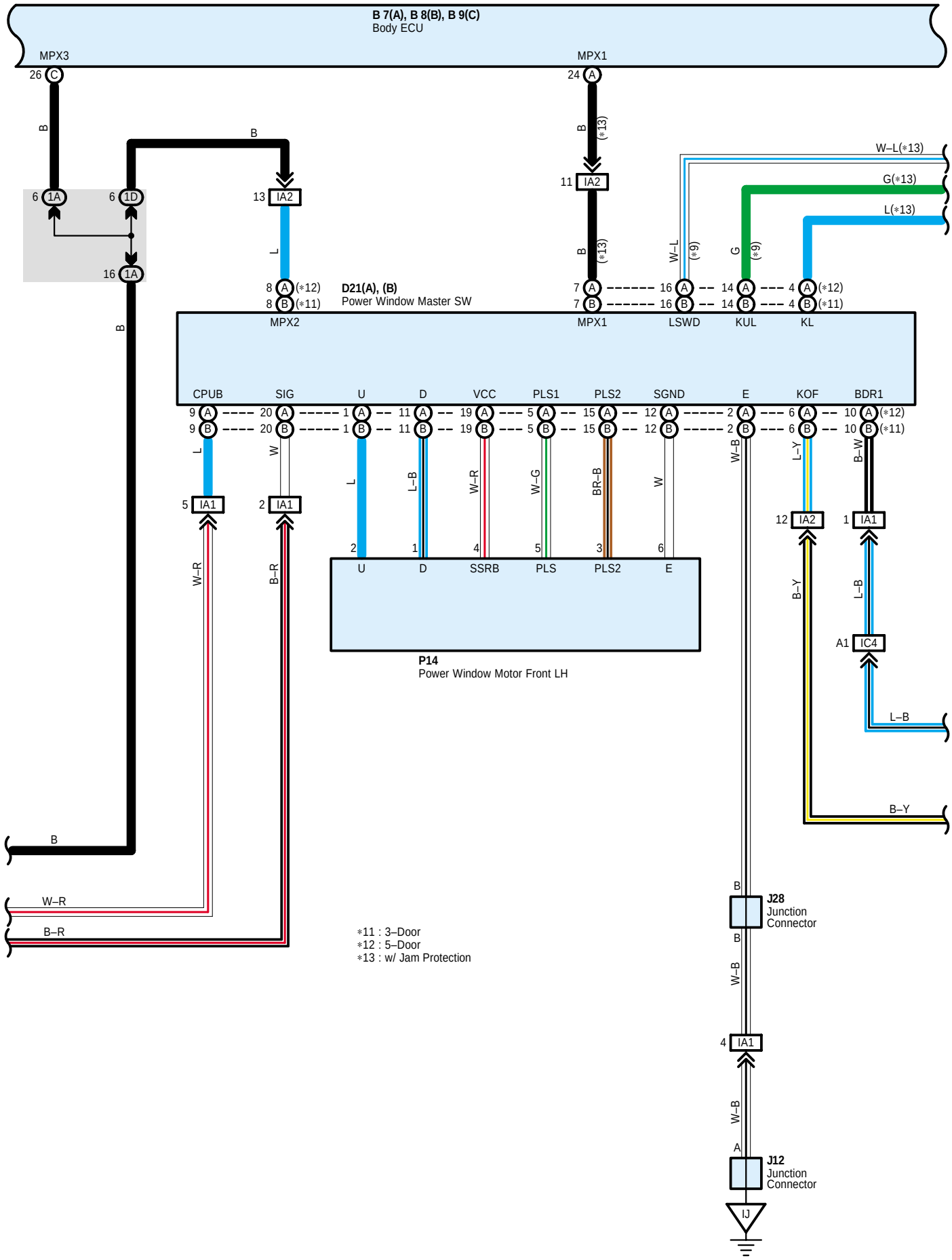
B 7(A), B 8(B), B 9(C)
Body ECU
MPX3
MPX1
D21(A), (B)
Power Window Master SW
MPX2
LSWD
KUL
KL
CPUB
SIG
U
D
VCC
PLS1
PLS2
SGND
E
KOF
BDR1
P14
Power Window Motor Front LH
SSRB
PLS
J28
Junction Connector
J12
Junction Connector
∗11 : 3–Door
∗12 : 5–Door
∗13 : w/ Jam Protection

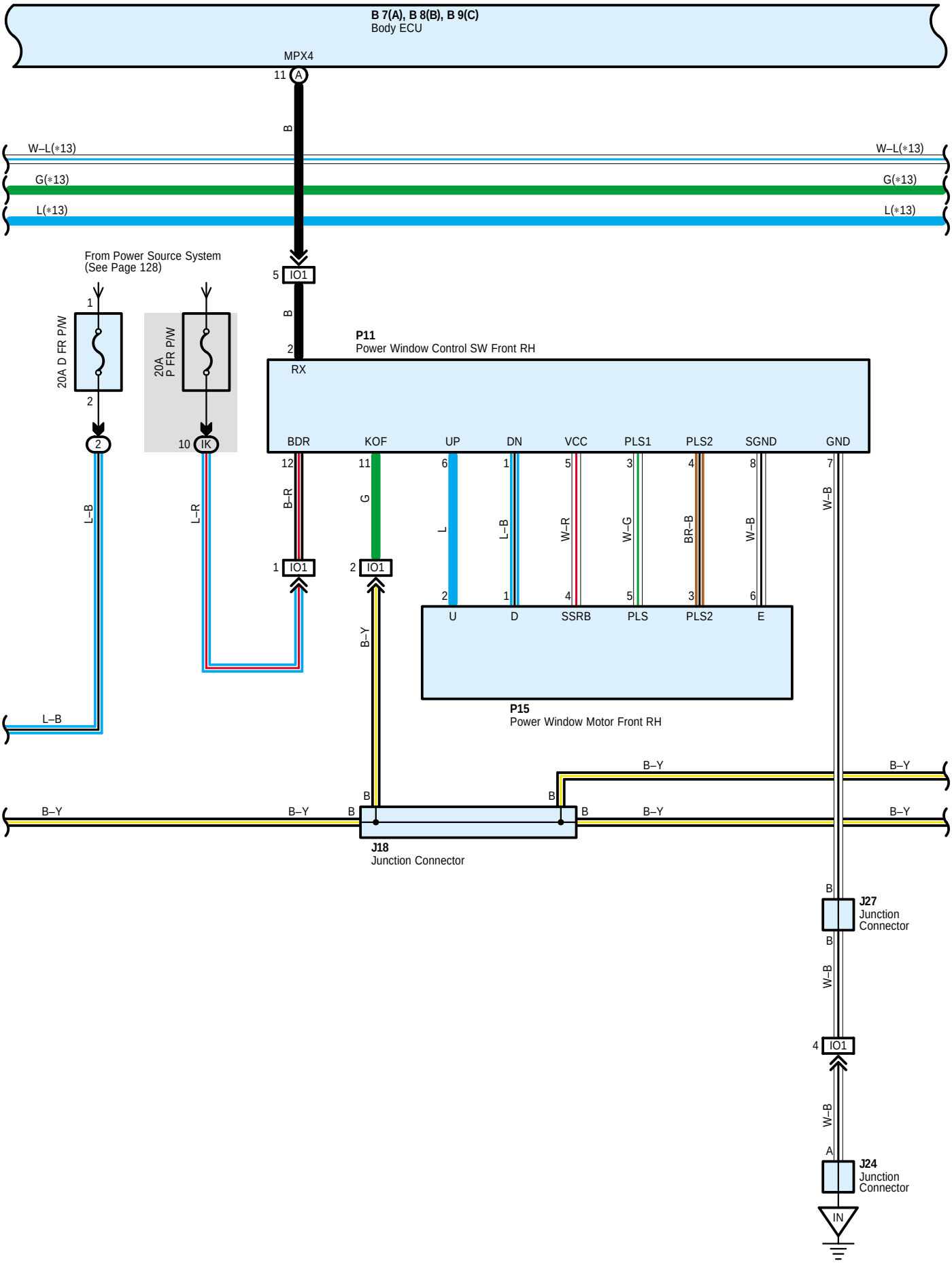
B 7(A), B 8(B), B 9(C)
Body ECU
MPX4
11 A
B
W–L(*13)
G(*13)
L(*13)
From Power Source System
(See Page 128)
5 IO1
B
2
RX
P11
Power Window Control SW Front RH
1
20A D FR P/W
2
2
20A
P FR P/W
10 IK
BDR
KOF
UP
DN
VCC
PLS1
PLS2
SGND
GND
12
11
6
1
5
3
4
8
7
B–R
G
L
L–B
W–R
W–G
BR–B
W–B
W–B
1 IO1
2 IO1
2
1
4
5
3
6
U
D
SSRB
PLS
PLS2
E
P15
Power Window Motor Front RH
L–B
L–R
L–B
B–Y
B–Y
B–Y
B–Y
B–Y
B–Y
B
B
B
B
J18
Junction Connector
B
J27
Junction
Connector
B
W–B
4 IO1
W–B
A
J24
Junction
Connector
IN

Multiplex Communication System (LHD)

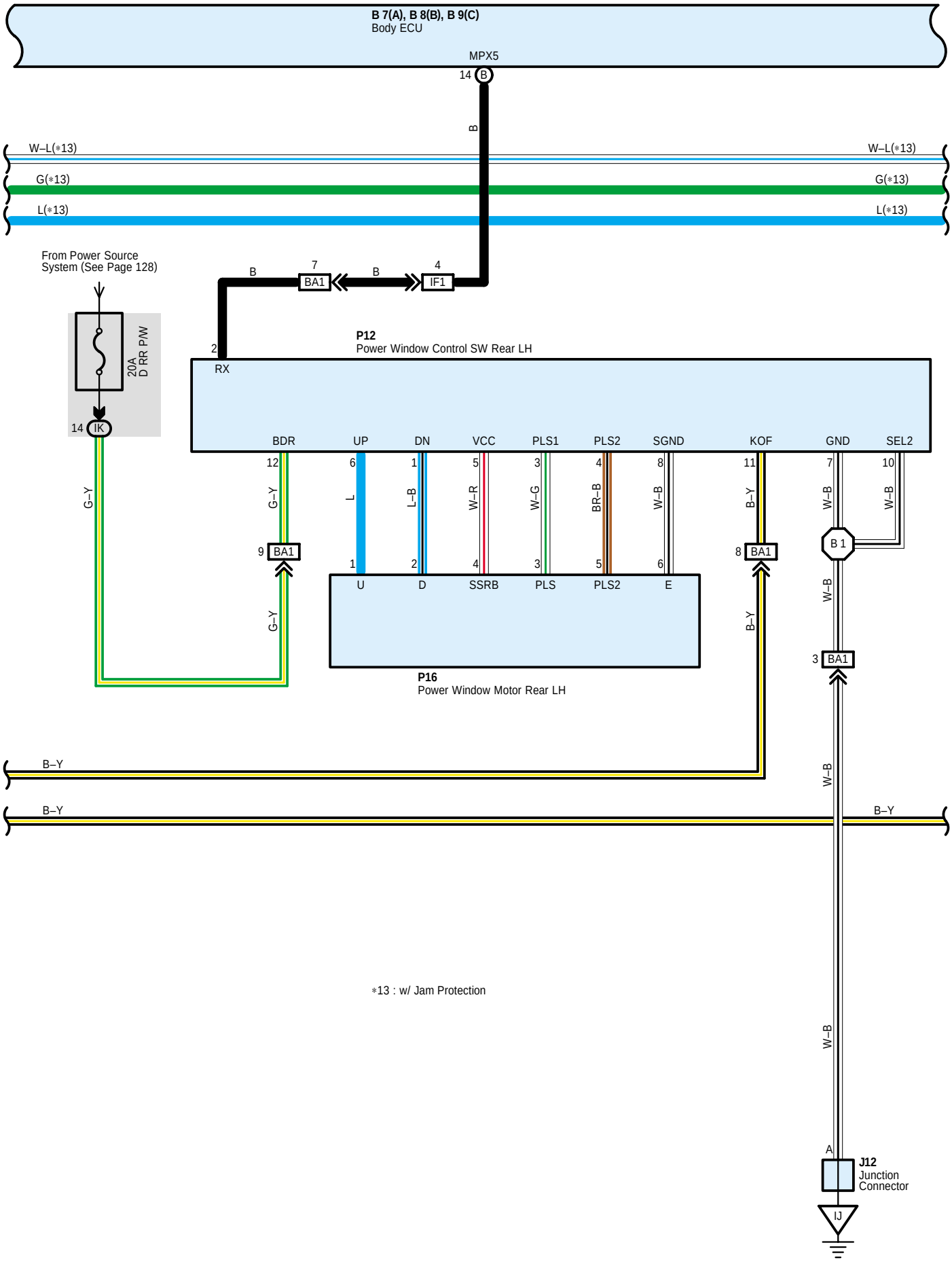

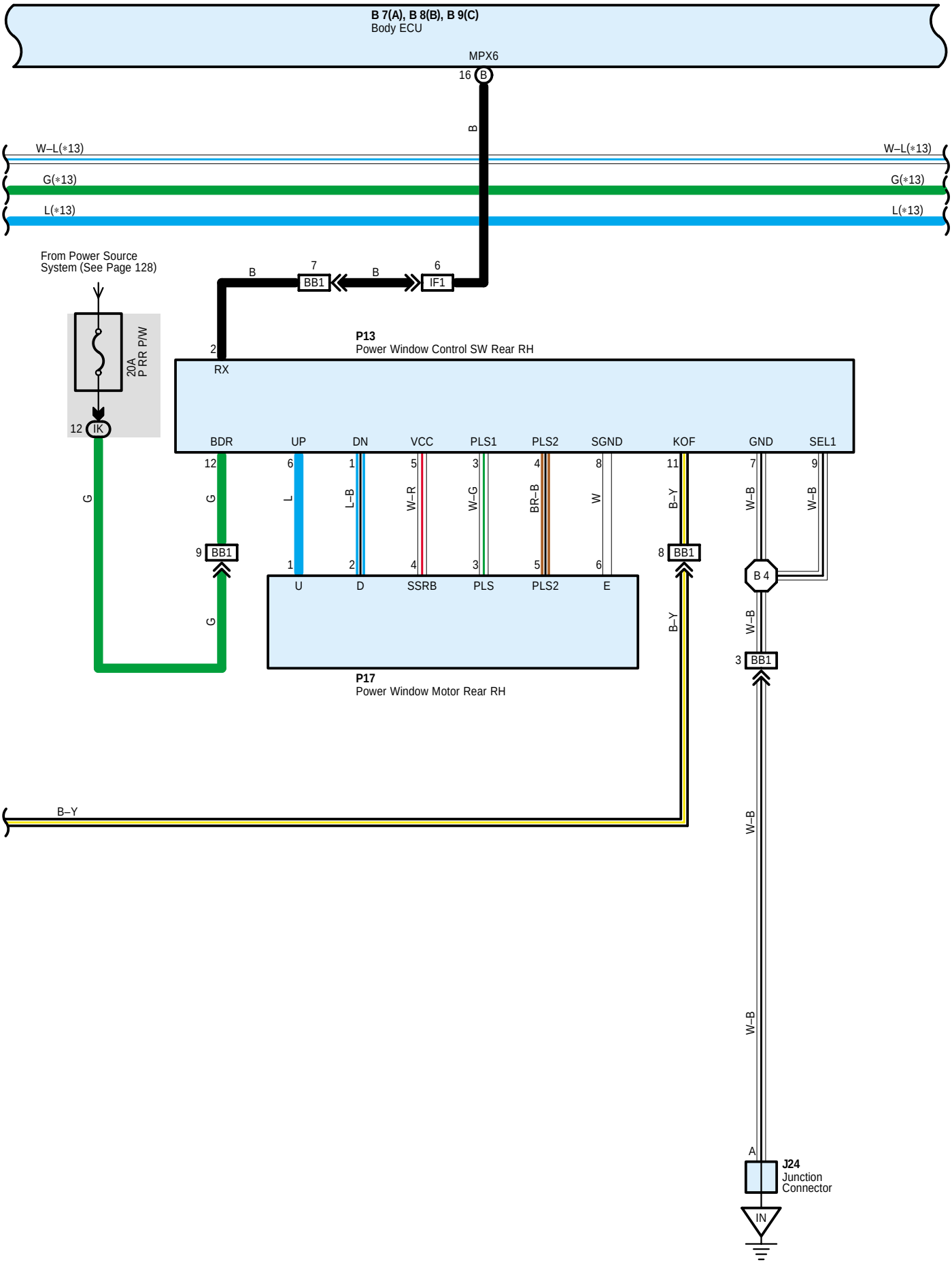
B 7(A), B 8(B), B 9(C)
Body ECU
MPX6
16 B
B
W–L(∗13)
G(∗13)
L(∗13)
From Power Source System (See Page 128)
20A P RR P/W
12 IK
B
7
BB1
B
6
IF1
2
RX
P13
Power Window Control SW Rear RH
BDR
UP
DN
VCC
PLS1
PLS2
SGND
KOF
GND
SEL1
12
6
1
5
3
4
8
11
7
9
G
L
L–B
W–R
W–G
BR–B
W
B–Y
W–B
W–B
9 BB1
1
2
4
3
5
6
8 BB1
B 4
U
D
SSRB
PLS
PLS2
E
B–Y
W–B
3 BB1
P17
Power Window Motor Rear RH
B–Y
W–B
W–B
A
J24
Junction Connector
IN

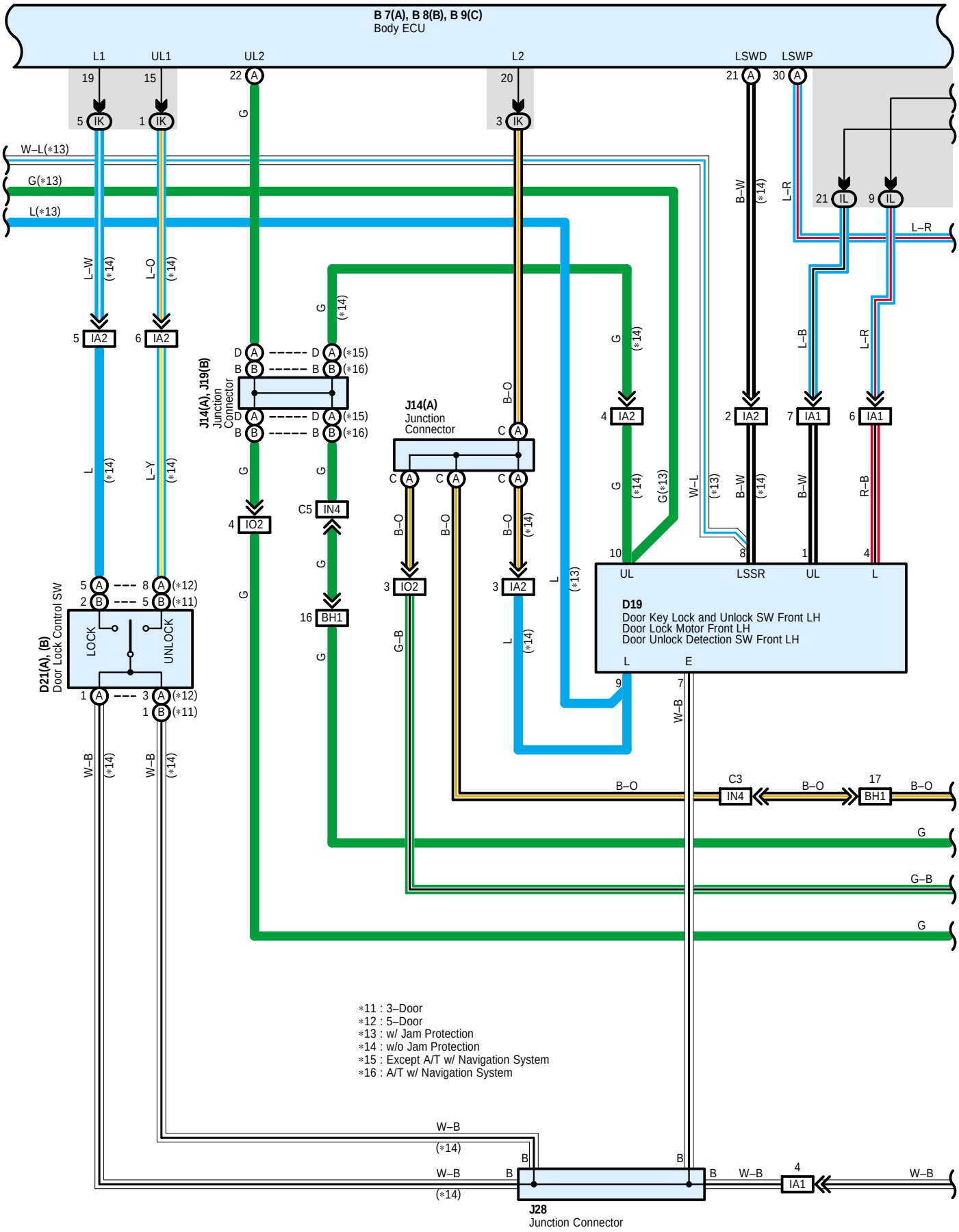
B 7(A), B 8(B), B 9(C)
Body ECU
L1
UL1
UL2
L2
LSWD
LSWP
W–L(*13)
G(*13)
L(*13)
J14(A), J19(B)
Junction Connector
J14(A)
Junction Connector
D21(A), (B)
Door Lock Control SW
LOCK
UNLOCK
D19
Door Key Lock and Unlock SW Front LH
Door Lock Motor Front LH
Door Unlock Detection SW Front LH
*11 : 3–Door
*12 : 5–Door
*13 : w/ Jam Protection
*14 : w/o Jam Protection
*15 : Except A/T w/ Navigation System
*16 : A/T w/ Navigation System
J28
Junction Connector

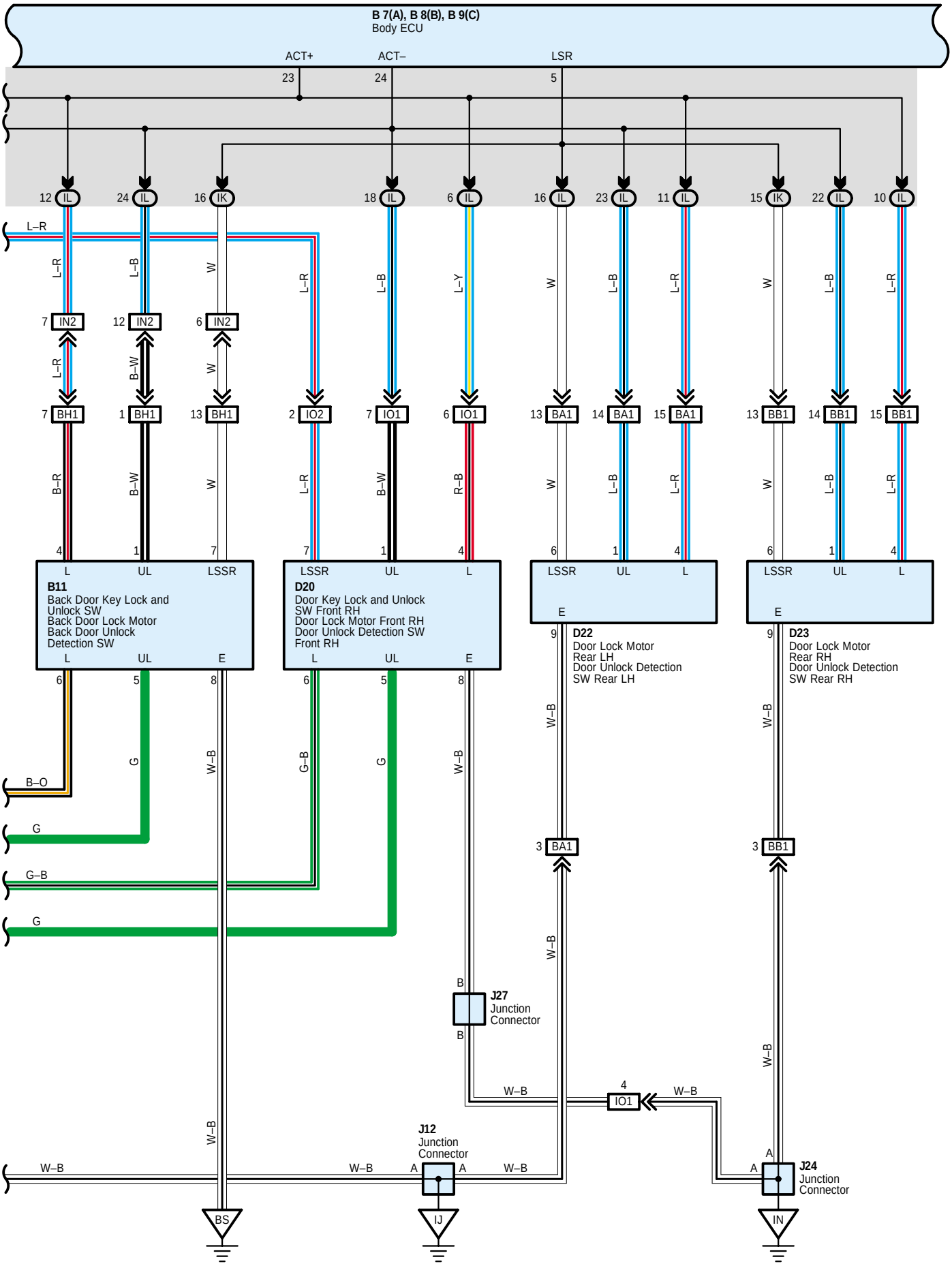
B 7(A), B 8(B), B 9(C)
Body ECU
ACT+
ACT–
LSR
23
24
5
12 IL
24 IL
16 IK
18 IL
6 IL
16 IL
23 IL
11 IL
15 IK
22 IL
10 IL
L–R
L–R
L–B
W
L–R
L–B
L–Y
W
L–B
L–R
W
L–B
L–R
7 IN2
12 IN2
6 IN2
L–R
B–W
W
7 BH1
1 BH1
13 BH1
2 IO2
7 IO1
6 IO1
13 BA1
14 BA1
15 BA1
13 BB1
14 BB1
15 BB1
B–R
B–W
W
L–R
B–W
R–B
W
L–B
L–R
W
L–B
L–R
4
1
7
7
1
4
6
1
4
6
1
4
L
UL
LSSR
B11
Back Door Key Lock and Unlock SW
Back Door Lock Motor
Back Door Unlock Detection SW
L
UL
E
LSSR
UL
L
D20
Door Key Lock and Unlock SW Front RH
Door Lock Motor Front RH
Door Unlock Detection SW Front RH
L
UL
E
LSSR
UL
L
E
9
D22
Door Lock Motor Rear LH
Door Unlock Detection SW Rear LH
LSSR
UL
L
E
9
D23
Door Lock Motor Rear RH
Door Unlock Detection SW Rear RH
6
5
8
6
5
8
B–O
G
W–B
G–B
G
W–B
G–B
G
W–B
W–B
3 BA1
3 BB1
W–B
B
J27
Junction Connector
B
W–B
4
IO1
W–B
W–B
J12
Junction Connector
A
A
W–B
W–B
W–B
A
A
J24
Junction Connector
BS
IJ
IN

Multiplex Communication System (LHD)

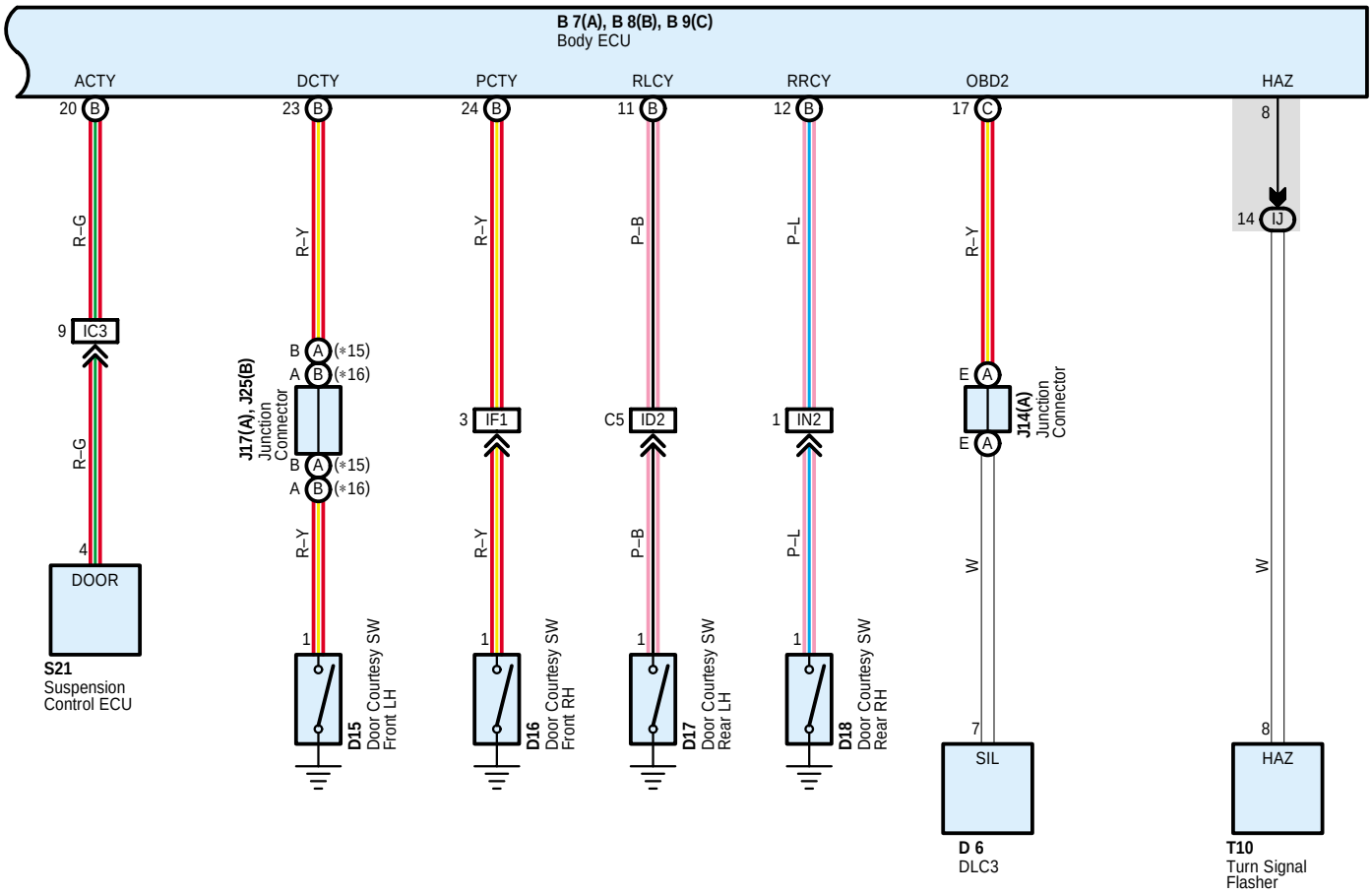

*15 : Except A/T w/ Navigation System
*16 : A/T w/ Navigation System

System Outline

Multiplex communication system is controlled by body ECU, theft deterrent ECU, double lock ECU, etc.
For example, when door is opened, signal from door courtesy SW is transmitted to body ECU and turns on indoor lamp.
See new car features or repair manual for detail.

Service Hints

Body ECU

22–Ground : Approx. 12 volts with ignition SW at ACC or ON position
11, 12–Ground : Always approx. 12 volts
1, 10–Ground : Approx. 12 volts with ignition SW at ON position
4, 16–Ground : Always continuity

T8 Theft Deterrent ECU

2, 3–Ground : Always approx. 12 volts
10–Ground : Approx. 12 volts with ignition SW at ON position
29–Ground : Always continuity

○ : **Parts Location**

Code		See Page	Code		See Page	Code	See Page
A19		38 (*1)	E5		44 (*4)	J27	52 (*6)
		40 (*2)			46 (*5)		54 (*7)
		42 (*3)	E9	A	49 (LHD)	J28	52 (*6)
		44 (*4)	E10	B	49 (LHD)		54 (*7)
		46 (*5)	F13		49 (LHD)	J29	52 (*6)
B7	A	48 (LHD)	H5		39 (*1)		54 (*7)
B8	B	48 (LHD)			41 (*2)	J30	52 (*6)
B9	C	48 (LHD)			43 (*3)		54 (*7)
B10		52 (*6)			45 (*4)	J31	52 (*6)
		54 (*7)			47 (*5)		54 (*7)
B11		52 (*6)	H6		39 (*1)	J34	52 (*6)
		54 (*7)			41 (*2)	K2	50 (LHD)
B13		56 (*8)			43 (*3)	L4	53 (*6)
		57 (*9)			45 (*4)		55 (*7)
B14		56 (*8)			47 (*5)	M9	53 (*6)
		57 (*9)	H8		39 (*1)		55 (*7)
C9	A	49 (LHD)			41 (*2)	O4	53 (*6)
C10	B	49 (LHD)			43 (*3)		55 (*7)
C11	C	49 (LHD)			45 (*4)	P8	53 (*6)
C14		49 (LHD)			47 (*5)		55 (*7)
C15		49 (LHD)	H9		39 (*1)	P11	53 (*6)
D6		49 (LHD)			41 (*2)		55 (*7)
D10		52 (*6)			43 (*3)	P12	53 (*6)
		54 (*7)			45 (*4)	P13	53 (*6)
D11		52 (*6)			47 (*5)	P14	53 (*6)
		54 (*7)	I13		50 (LHD)		55 (*7)
D12		52 (*6)	I15		52 (*6)	P15	53 (*6)
		54 (*7)			54 (*7)		55 (*7)
D13		52 (*6)	J4		39 (*1)	P16	53 (*6)
D14		52 (*6)			41 (*2)	P17	53 (*6)
D15		52 (*6)			43 (*3)	R10	51 (LHD)
		54 (*7)			45 (*4)	S21	51 (LHD)
D16		52 (*6)			47 (*5)	T1	39 (*1)
		54 (*7)	J7	A	50 (LHD)		41 (*2)
D17		52 (*6)	J8	B	50 (LHD)		43 (*3)
D18		52 (*6)	J9		50 (LHD)		45 (*4)
D19		52 (*6)	J12		50 (LHD)		47 (*5)
		54 (*7)	J13		50 (LHD)	T8	51 (LHD)
D20		52 (*6)	J14	A	50 (LHD)	T9	51 (LHD)
		54 (*7)	J15		50 (LHD)	T10	51 (LHD)
D21	A	52 (*6)	J16		50 (LHD)	T11	53 (*6)
	B	54 (*7)	J17	A	50 (LHD)		55 (*7)
D22		52 (*6)	J18		50 (LHD)	V14	53 (*6)
D23		52 (*6)	J19	B	50 (LHD)		55 (*7)
E5		38 (*1)	J23		50 (LHD)	V15	53 (*6)
		40 (*2)	J24		50 (LHD)		55 (*7)
		42 (*3)	J25	B	50 (LHD)		

* 1 : LHD 1GR-FE * 2 : LHD 3RZ-FE * 3 : LHD 1KD-FTV * 4 : LHD 1KZ-TE * 5 : LHD 5L-E * 6 : LHD 5-Door * 7 : LHD 3-Door
* 8 : LHD 8Way Power Seat * 9 : LHD Except 8Way Power Seat * 10 : RHD 1GR-FE * 11 : RHD 3RZ-FE * 12 : RHD 1KD-FTV
* 13 : RHD 1KZ-TE * 14 : RHD 5L-E * 15 : RHD 5-Door * 16 : RHD 3-Door * 17 : RHD 8Way Power Seat
* 18 : RHD Except 8Way Power Seat

: **Relay Blocks**

Code	See Page	Relay Blocks (Relay Block Location)
2	23	Engine Room R/B (Engine Compartment Left)
3	24	Engine Room R/B No.3 (Engine Compartment Left)
5	25 (LHD)	Passenger Side R/B (Right Kick Panel)

: **Junction Block and Wire Harness Connector**

Code	See Page	Junction Block and Wire Harness (Connector Location)
IA	26 (LHD)	Roof Wire and Driver Side J/B (Lower Finish Panel)
IB	26 (LHD)	Engine Room Main Wire and Driver Side J/B (Lower Finish Panel)
IC		
ID		
IE		
IG	27 (LHD)	Instrument Panel Wire and Driver Side J/B (Lower Finish Panel)
IH		
IJ		
IK		
IL		
1A	32 (LHD)	Instrument Panel Wire and J/B No.1 (Instrument Panel Reinforcement Left)
1B		
1C		
1D		
1E		
2A	34	Instrument Panel Wire and J/B No.2 (Instrument Panel Reinforcement Center)
2B		
2E		
3A	36 (LHD)	Instrument Panel Wire and J/B No.3 (Instrument Panel Reinforcement Right)
3B		
3C		
3D		
3E		

: Connector Joining Wire Harness and Wire Harness

Code	See Page	Joining Wire Harness and Wire Harness (Connector Location)
EA1	78 (*1)	Engine No.2 Wire and Engine Room Main Wire (Near the Engine Room R/B)
IA1	88 (LHD)	Front Door LH Wire and Instrument Panel Wire (Left Kick Panel)
IA2		
IC3	88 (LHD)	Instrument Panel Wire and Engine Room Main Wire (Left Kick Panel)
IC4		
ID1	90 (LHD)	Instrument Panel Wire and Floor No.2 Wire (Left Kick Panel)
ID2		
IE1	90 (LHD)	Roof Wire and Instrument Panel Wire (Upper the Driver Side J/B)
IF1	90 (LHD)	Instrument Panel Wire and Instrument Panel Wire (Near the J/B No.1)
IL2	92 (LHD)	Engine Wire and Instrument Panel Wire (Right Side of the Blower Unit)
IL3		
IM1	92 (LHD)	Instrument Panel Wire and Engine Room Main Wire (Right Kick Panel)
IM4		
IM5		
IN2	94 (LHD)	Instrument Panel Wire and Floor Wire (Right Kick Panel)
IN4		
IO1	94 (LHD)	Front Door RH Wire and Instrument Panel Wire (Right Kick Panel)
IO2		
BA1	96 (*6)	Rear Door LH Wire and Instrument Panel Wire (Center Pillar LH)
BB1	96 (*6)	Rear Door RH Wire and Instrument Panel Wire (Center Pillar RH)
BH1	98 (*6)	Back Door No.1 Wire and Floor Wire (Right Quarter Panel Inner)
	100 (*7)	

* 1 : LHD 1GR-FE * 2 : LHD 3RZ-FE * 3 : LHD 1KD-FTV * 4 : LHD 1KZ-TE * 5 : LHD 5L-E * 6 : LHD 5-Door * 7 : LHD 3-Door
* 8 : LHD 8Way Power Seat * 9 : LHD Except 8Way Power Seat * 10 : RHD 1GR-FE * 11 : RHD 3RZ-FE * 12 : RHD 1KD-FTV
* 13 : RHD 1KZ-TE * 14 : RHD 5L-E * 15 : RHD 5-Door * 16 : RHD 3-Door * 17 : RHD 8Way Power Seat
* 18 : RHD Except 8Way Power Seat

▽ : Ground Points

Code	See Page	Ground Points Location
EA	78 (*1)	Front Right Fender
	80 (*2)	
	82 (*3)	
	84 (*4)	
	86 (*5)	
EB	78 (*1)	Front Left Fender
	80 (*2)	
	82 (*3)	
	84 (*4)	
	86 (*5)	
ED	80 (*2)	Ignition Coil Bracket
EE	80 (*2)	Intake Manifold
EF	82 (*3)	Rear Part of Cylinder Block
EH	84 (*4)	
EI	86 (*5)	
EV	78 (*1)	Rear Side of Left Bank Cylinder Block
IJ	88 (LHD)	Left Kick Panel
IL	88 (LHD)	Near the Right Side of Steering Column
IN	88 (LHD)	Right Kick Panel
BO	96 (*6)	Under the Driver's Seat
	100 (*7)	
BR	96 (*6)	Left Quarter Panel Inner
	100 (*7)	
BS	96 (*6)	Back Door Panel Center
	100 (*7)	
BT	96 (*6)	Right Quarter Panel Inner
	100 (*7)	

⬡ : Splice Points

Code	See Page	Wire Harness with Splice Points	Code	See Page	Wire Harness with Splice Points
I5	90 (LHD)	Instrument Panel Wire	B2	98 (*6)	Roof Wire
I7				100 (*7)	
B1	98 (*6)	Rear Door No.1 Wire LH	B4	98 (*6)	Rear Door No.1 Wire RH

* 1 : LHD 1GR-FE * 2 : LHD 3RZ-FE * 3 : LHD 1KD-FTV * 4 : LHD 1KZ-TE * 5 : LHD 5L-E * 6 : LHD 5-Door * 7 : LHD 3-Door
* 8 : LHD 8Way Power Seat * 9 : LHD Except 8Way Power Seat * 10 : RHD 1GR-FE * 11 : RHD 3RZ-FE * 12 : RHD 1KD-FTV
* 13 : RHD 1KZ-TE * 14 : RHD 5L-E * 15 : RHD 5-Door * 16 : RHD 3-Door * 17 : RHD 8Way Power Seat
* 18 : RHD Except 8Way Power Seat

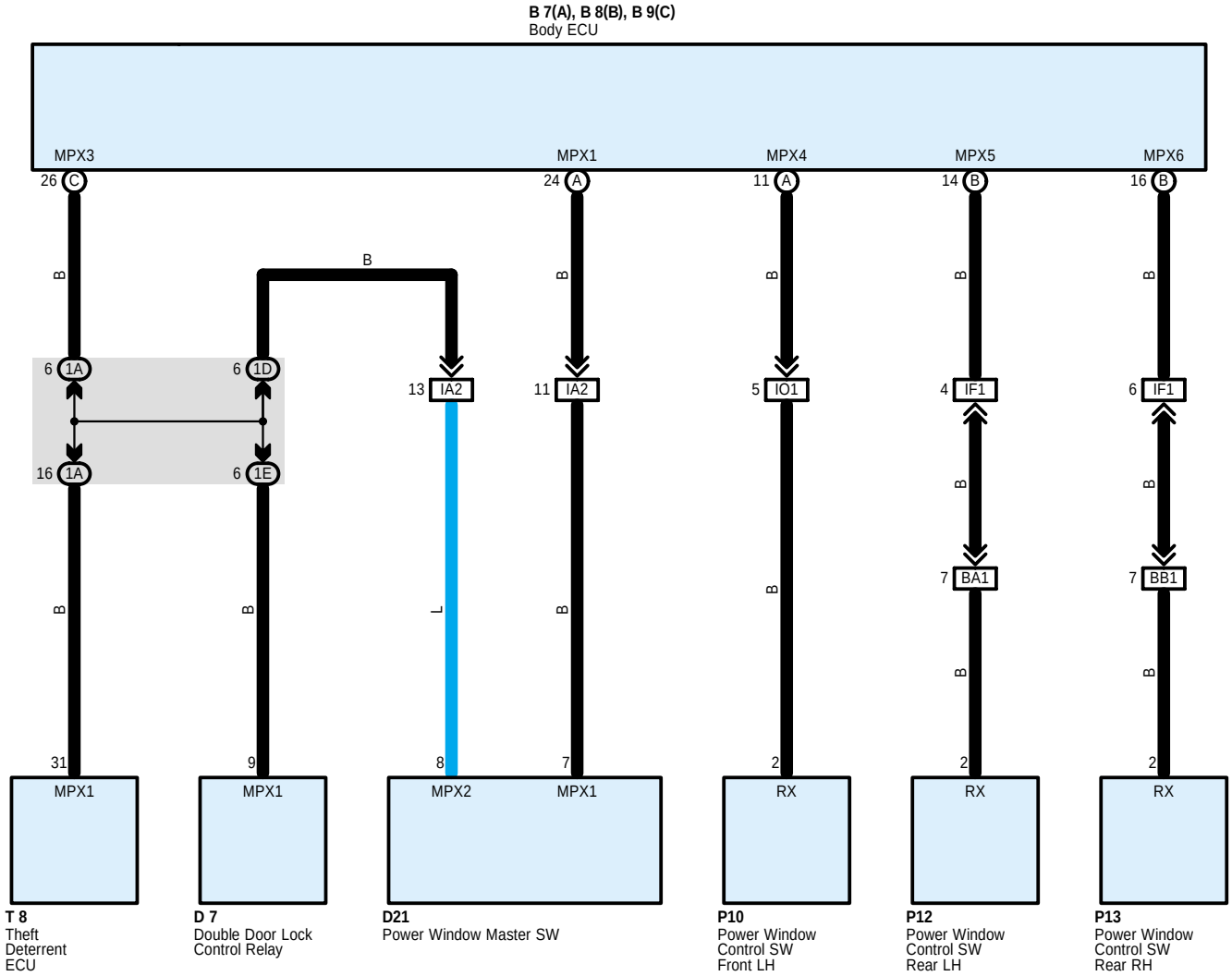
B 7(A), B 8(B), B 9(C)
Body ECU
MPX3
MPX1
MPX4
MPX5
MPX6
26 C
24 A
11 A
14 B
16 B
B
6 1A
6 1D
13 IA2
11 IA2
5 IO1
4 IF1
6 IF1
16 1A
6 1E
7 BA1
7 BB1
L
31
9
8
7
2
2
2
MPX1
MPX1
MPX2
MPX1
RX
RX
RX
T 8
Theft
Deterrent
ECU
D 7
Double Door Lock
Control Relay
D21
Power Window Master SW
P10
Power Window
Control SW
Front LH
P12
Power Window
Control SW
Rear LH
P13
Power Window
Control SW
Rear RH

Multiplex Communication System Includes Following Systems

- ∗ **Door Lock Control**
- ∗ **Double Locking**
- ∗ **Headlight**
- ∗ **Interior Light**
- ∗ **Key Reminder**
- ∗ **Light Auto Turn Off**
- ∗ **Power Window**
- ∗ **Seat Belt Warning**
- ∗ **Theft Deterrent**
- ∗ **Wireless Door Lock Control**

: Parts Location

Code		See Page	Code	See Page	Code	See Page
B7	A	68 (RHD)	D21	72 (*15)	P12	73 (*15)
B8	B	68 (RHD)		74 (*16)	P13	73 (*15)
B9	C	68 (RHD)	P10	73 (*15)	T8	71 (RHD)
D7		69 (RHD)		75 (*16)		

: Junction Block and Wire Harness Connector

Code	See Page	Junction Block and Wire Harness (Connector Location)
1A	32 (RHD)	Instrument Panel Wire and J/B No.1 (Instrument Panel Reinforcement Right)
1D		
1E		

: Connector Joining Wire Harness and Wire Harness

Code	See Page	Joining Wire Harness and Wire Harness (Connector Location)
IA2	112 (RHD)	Front Door LH Wire and Instrument Panel Wire (Left Kick Panel)
IF1	114 (RHD)	Instrument Panel Wire and Instrument Panel Wire (Near the J/B No.1)
IO1	118 (RHD)	Front Door RH Wire and Instrument Panel Wire (Right Kick Panel)
BA1	120 (*15)	Rear Door LH Wire and Instrument Panel Wire (Center Pillar LH)
BB1	120 (*15)	Rear Door RH Wire and Instrument Panel Wire (Center Pillar RH)

* 1 : LHD 1GR-FE * 2 : LHD 3RZ-FE * 3 : LHD 1KD-FTV * 4 : LHD 1KZ-TE * 5 : LHD 5L-E * 6 : LHD 5-Door * 7 : LHD 3-Door
* 8 : LHD 8Way Power Seat * 9 : LHD Except 8Way Power Seat * 10 : RHD 1GR-FE * 11 : RHD 3RZ-FE * 12 : RHD 1KD-FTV
* 13 : RHD 1KZ-TE * 14 : RHD 5L-E * 15 : RHD 5-Door * 16 : RHD 3-Door * 17 : RHD 8Way Power Seat
* 18 : RHD Except 8Way Power Seat

Multiplex Communication System (RHD)

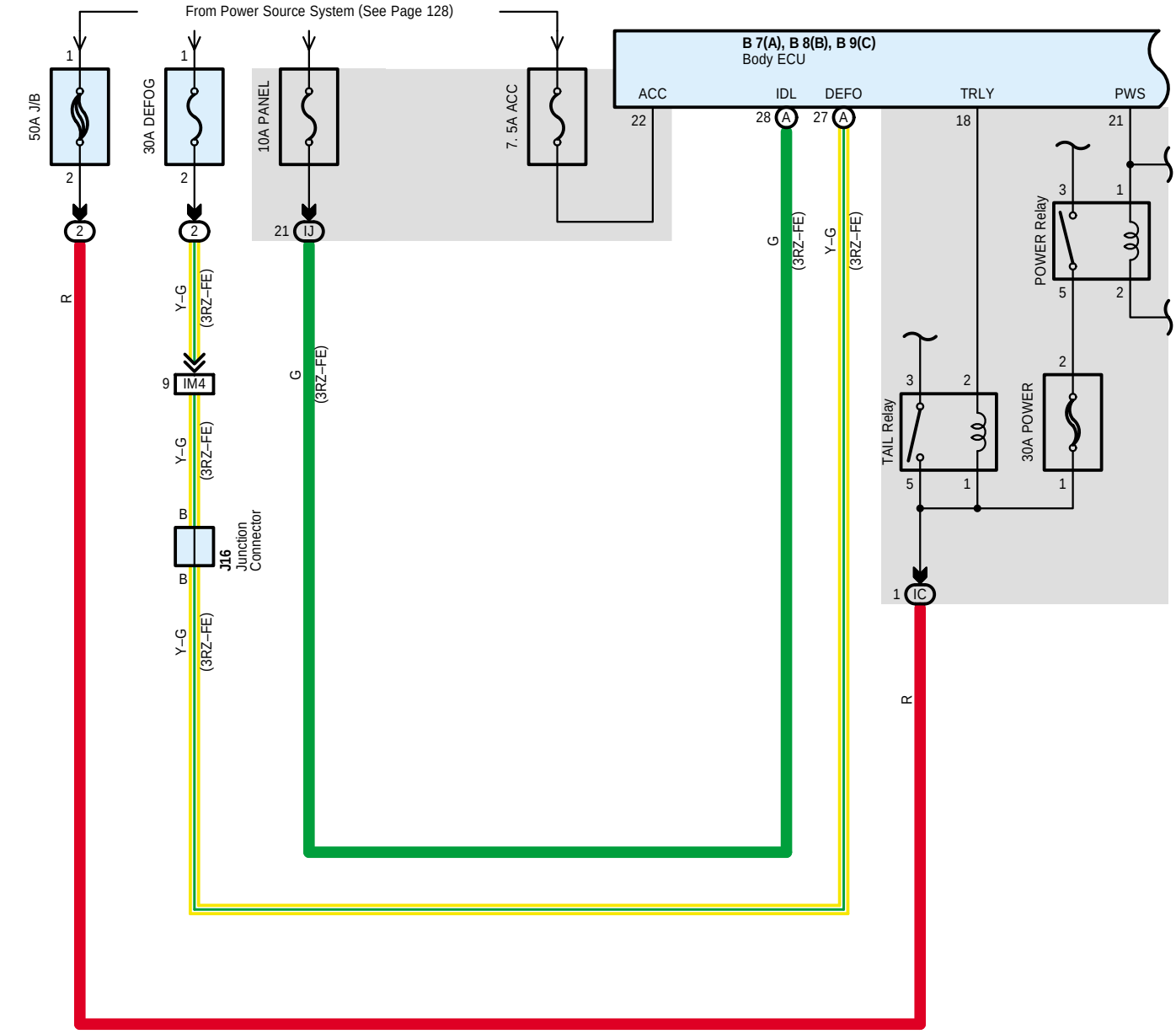

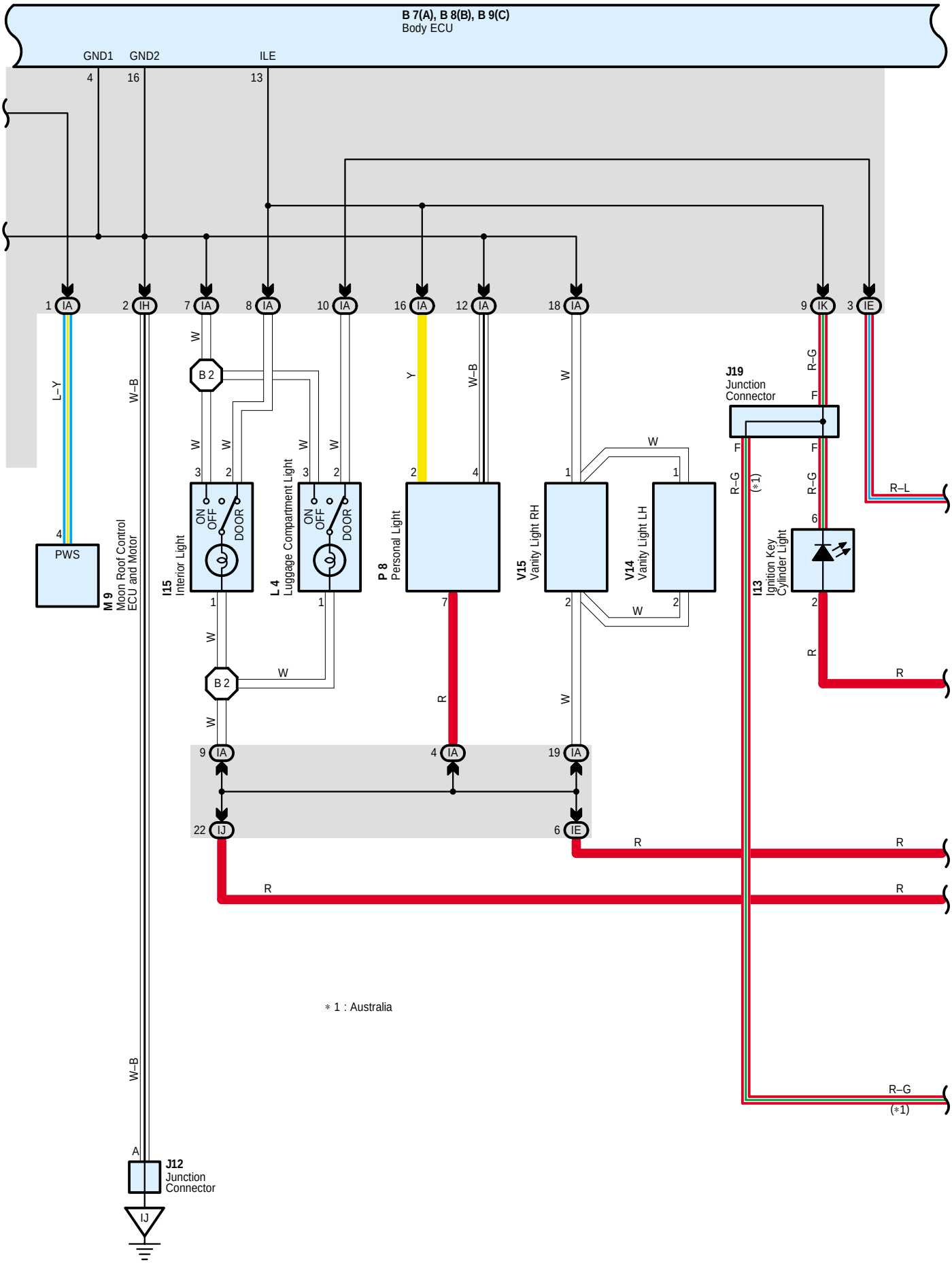
B 7(A), B 8(B), B 9(C)
Body ECU
GND1
GND2
ILE
4
16
13
1 IA
2 IH
7 IA
8 IA
10 IA
16 IA
12 IA
18 IA
9 IK
3 IE
L–Y
W–B
W
B 2
Y
R–G
J19
Junction
Connector
F
R–L
PWS
M 9
Moon Roof Control
ECU and Motor
I15
Interior Light
ON
OFF
DOOR
L 4
Luggage Compartment Light
P 8
Personal Light
V15
Vanity Light RH
V14
Vanity Light LH
I13
Ignition Key
Cylinder Light
R
9 IA
4 IA
19 IA
22 IJ
6 IE
(*1)
∗ 1 : Australia
A
J12
Junction
Connector
IJ

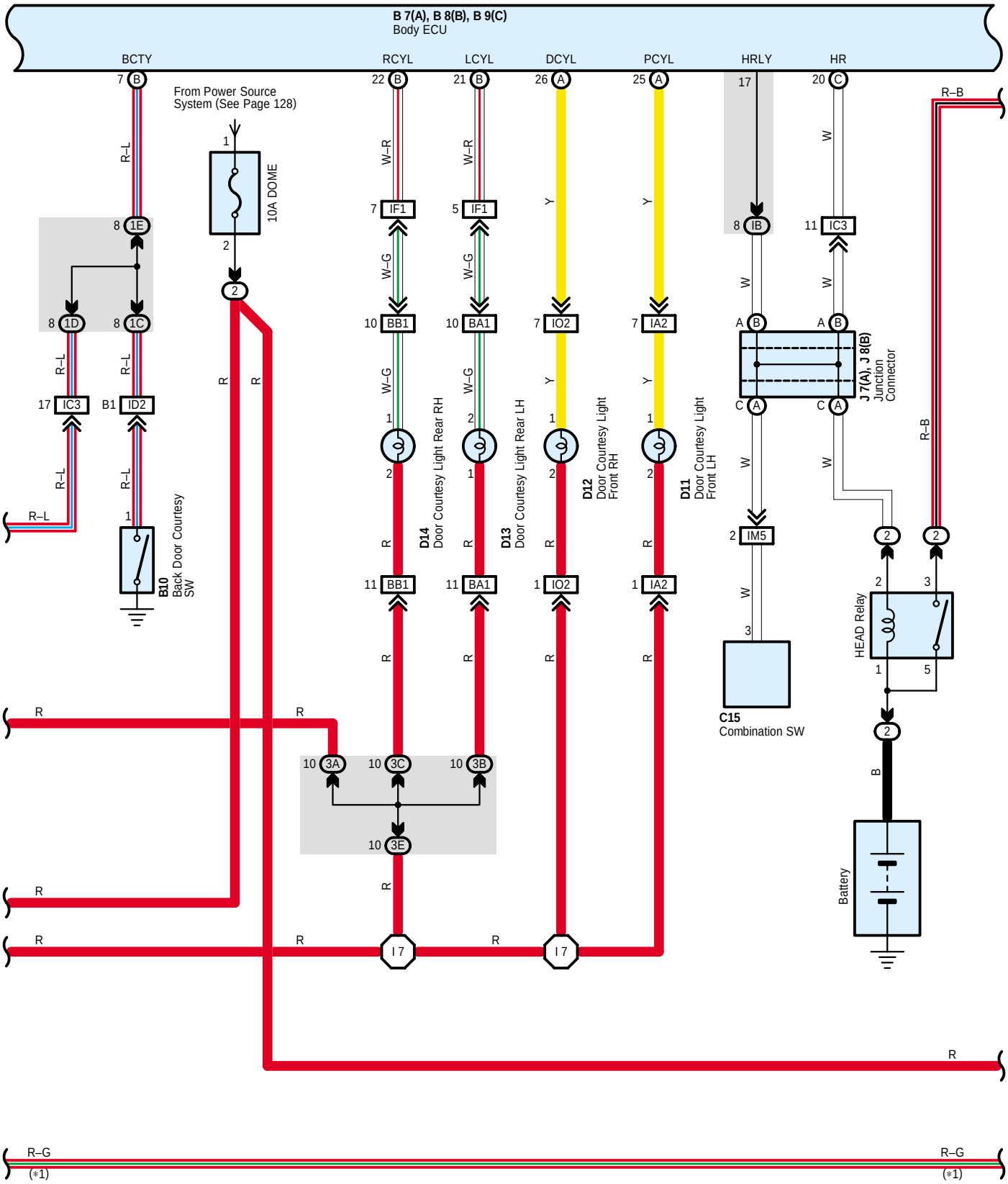
B 7(A), B 8(B), B 9(C)
Body ECU
BCTY
RCYL
LCYL
DCYL
PCYL
HRLY
HR
From Power Source System (See Page 128)
10A DOME
1E
1D
1C
IC3
ID2
B10 Back Door Courtesy SW
IF1
BB1
BA1
IO2
IA2
D14 Door Courtesy Light Rear RH
D13 Door Courtesy Light Rear LH
D12 Door Courtesy Light Front RH
D11 Door Courtesy Light Front LH
IB
IM5
C15 Combination SW
J 7(A), J 8(B) Junction Connector
HEAD Relay
Battery
3A
3C
3B
3E
I 7
R–B
R–G
(*1)

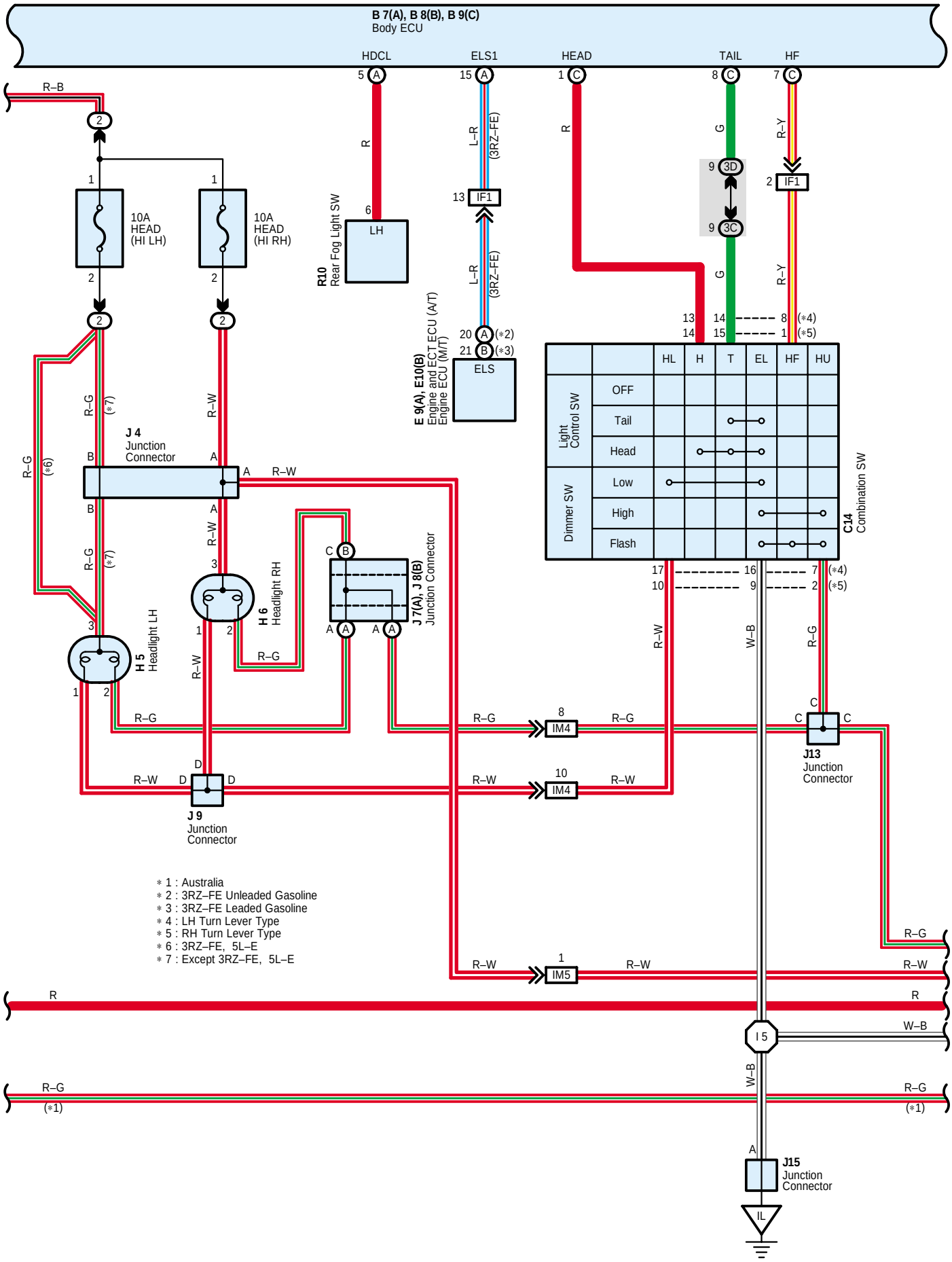
B 7(A), B 8(B), B 9(C)
Body ECU
HDCL
ELS1
HEAD
TAIL
HF
R–B
10A
HEAD
(HI LH)
10A
HEAD
(HI RH)
R10
Rear Fog Light SW
LH
IF1
(3RZ–FE)
E 9(A), E10(B)
Engine and ECT ECU (A/T)
Engine ECU (M/T)
ELS
J 4
Junction
Connector
H 5
Headlight LH
H 6
Headlight RH
J 7(A), J 8(B)
Junction Connector
J 9
Junction
Connector
IM4
IM5
J13
Junction
Connector
C14
Combination SW
Light
Control SW
Dimmer SW
OFF
Tail
Head
Low
High
Flash
HL
H
T
EL
HF
HU
I 5
J15
Junction
Connector
IL
∗ 1 : Australia
∗ 2 : 3RZ–FE Unleaded Gasoline
∗ 3 : 3RZ–FE Leaded Gasoline
∗ 4 : LH Turn Lever Type
∗ 5 : RH Turn Lever Type
∗ 6 : 3RZ–FE, 5L–E
∗ 7 : Except 3RZ–FE, 5L–E

Multiplex Communication System (RHD)

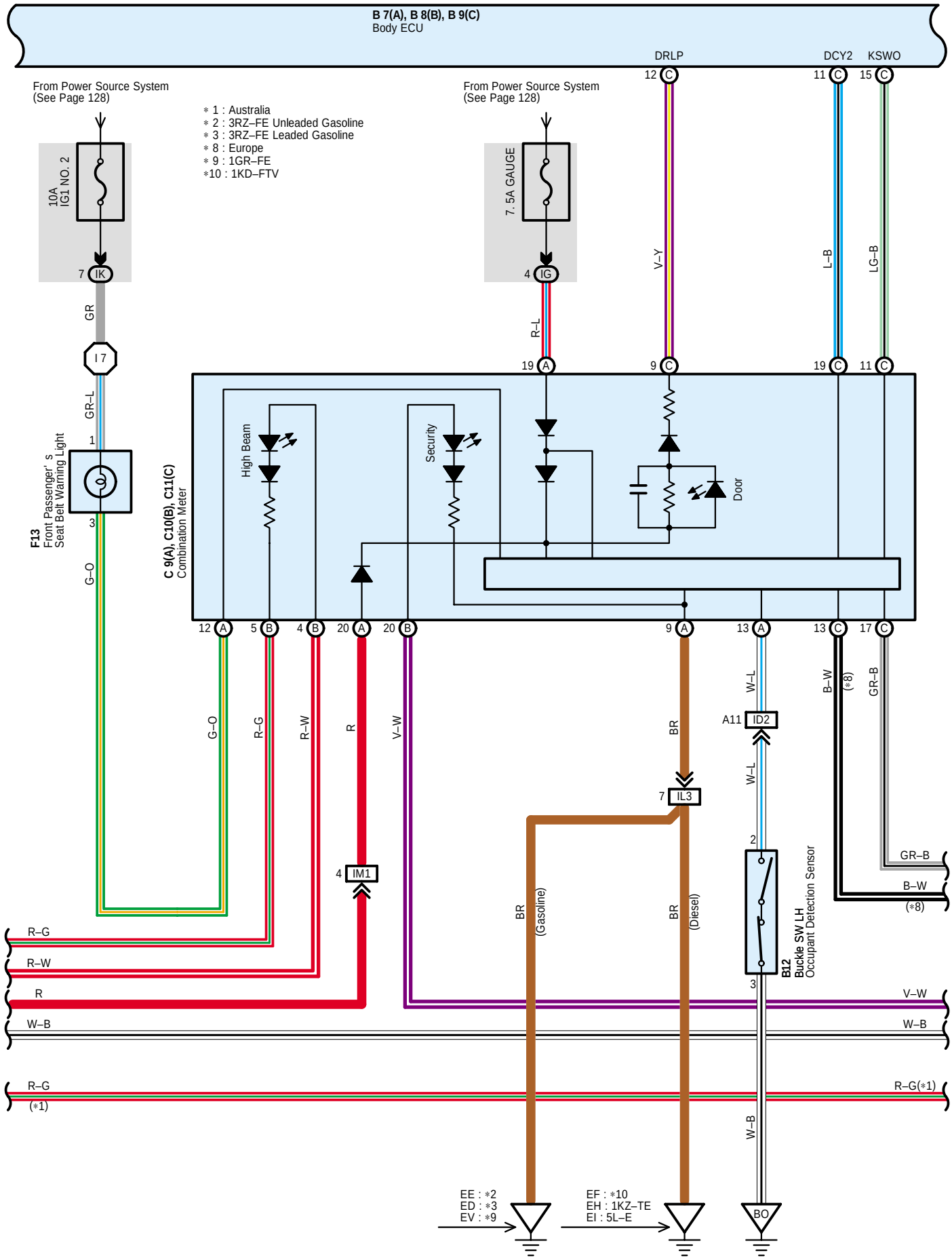

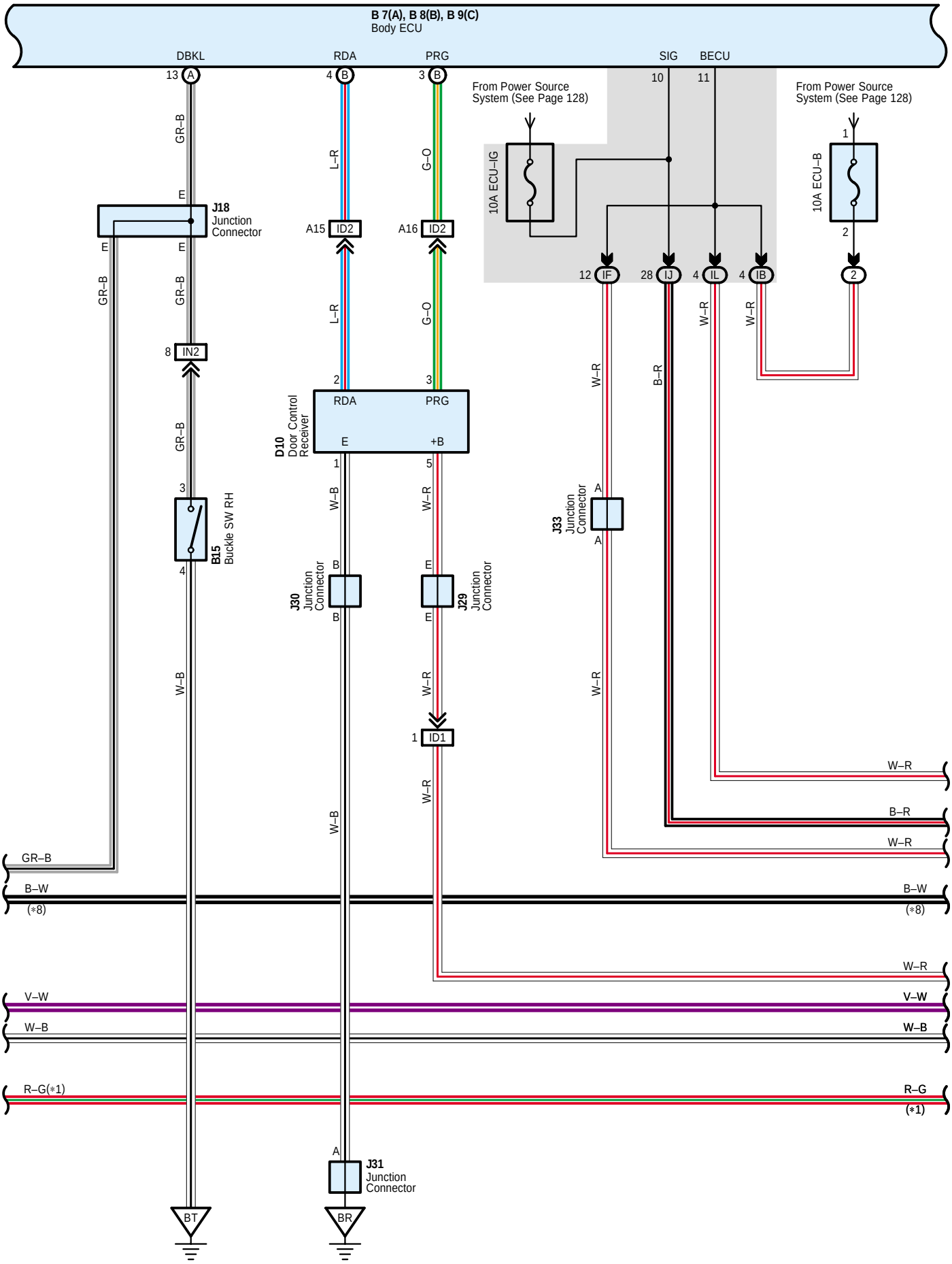
B 7(A), B 8(B), B 9(C)
Body ECU
DBKL
RDA
PRG
SIG
BECU
13 A
4 B
3 B
10
11
From Power Source System (See Page 128)
From Power Source System (See Page 128)
10A ECU–IG
10A ECU–B
1
2
GR–B
L–R
G–O
E
J18
Junction Connector
A15 ID2
A16 ID2
12 IF
28 IJ
4 IL
4 IB
2
W–R
B–R
8 IN2
D10
Door Control Receiver
RDA
PRG
E
+B
J33
Junction Connector
B15
Buckle SW RH
W–B
J30
Junction Connector
J29
Junction Connector
1 ID1
J31
Junction Connector
BT
BR
B–W
(*8)
V–W
R–G(*1)
(*1)

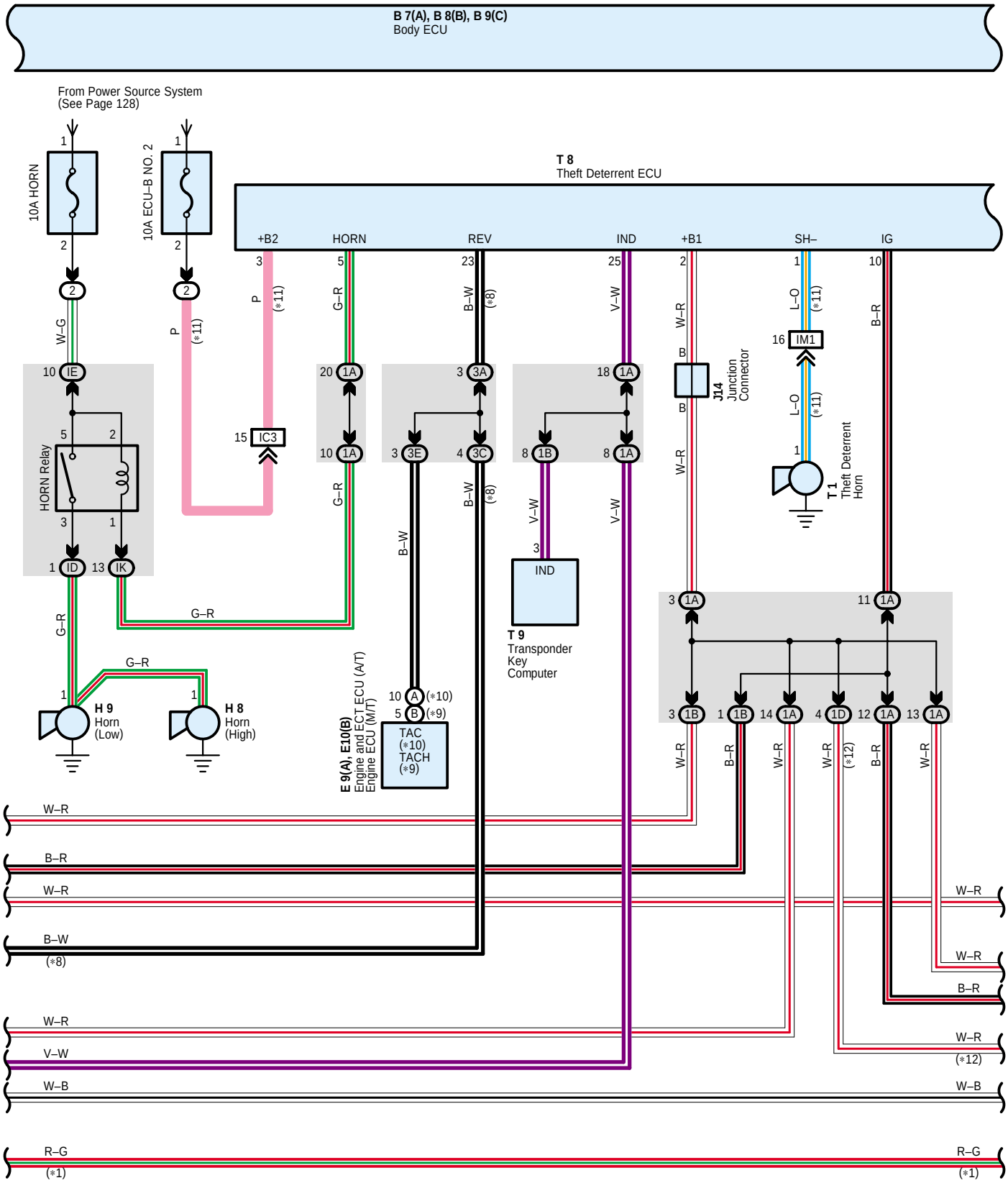

* 1 : Australia
* 8 : Europe
* 9 : 1GR–FE
*10 : 1KD–FTV
*11 : Except Europe
*12 : w/ Double Locking

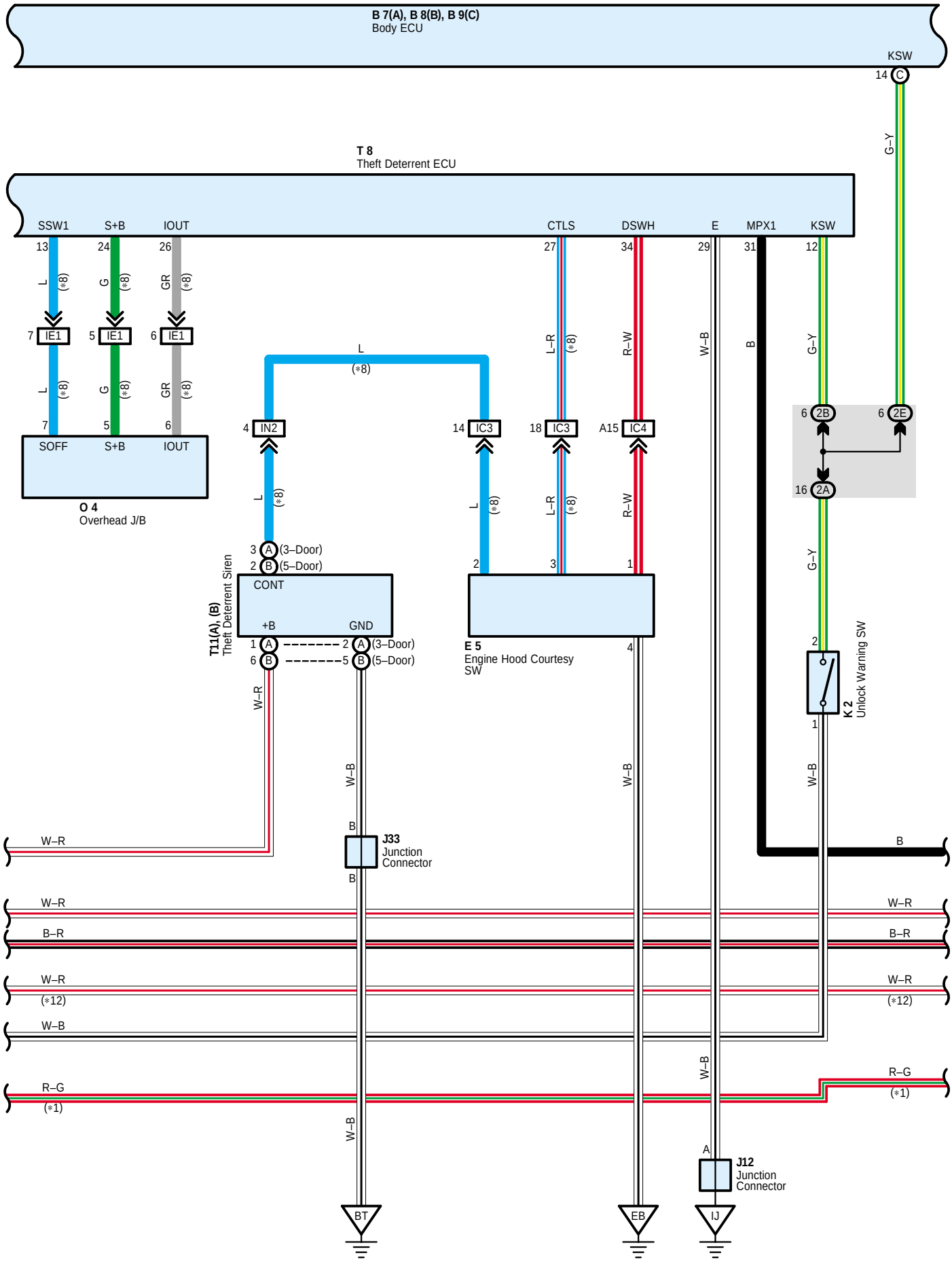
B 7(A), B 8(B), B 9(C)
Body ECU
KSW
14 C
G–Y
T 8
Theft Deterrent ECU
SSW1
S+B
IOUT
CTLS
DSWH
E
MPX1
KSW
13
24
26
27
34
29
31
12
L
(*8)
G
(*8)
GR
(*8)
L–R
(*8)
R–W
W–B
B
G–Y
7 IE1
5 IE1
6 IE1
L
(*8)
G
(*8)
GR
(*8)
7
5
6
SOFF
S+B
IOUT
O 4
Overhead J/B
4 IN2
14 IC3
18 IC3
A15 IC4
6 2B
6 2E
16 2A
L
(*8)
L
(*8)
L–R
(*8)
R–W
3 A (3–Door)
2 B (5–Door)
CONT
T11(A), (B)
Theft Deterrent Siren
+B
GND
1 A
6 B
2 A (3–Door)
5 B (5–Door)
2
3
1
E 5
Engine Hood Courtesy SW
4
G–Y
2
1
K 2
Unlock Warning SW
W–R
W–B
W–B
W–B
B
J33
Junction Connector
B
B
W–R
W–R
B–R
B–R
W–R
(*12)
W–R
(*12)
W–B
W–B
R–G
(*1)
R–G
(*1)
W–B
A
J12
Junction Connector
BT
EB
IJ

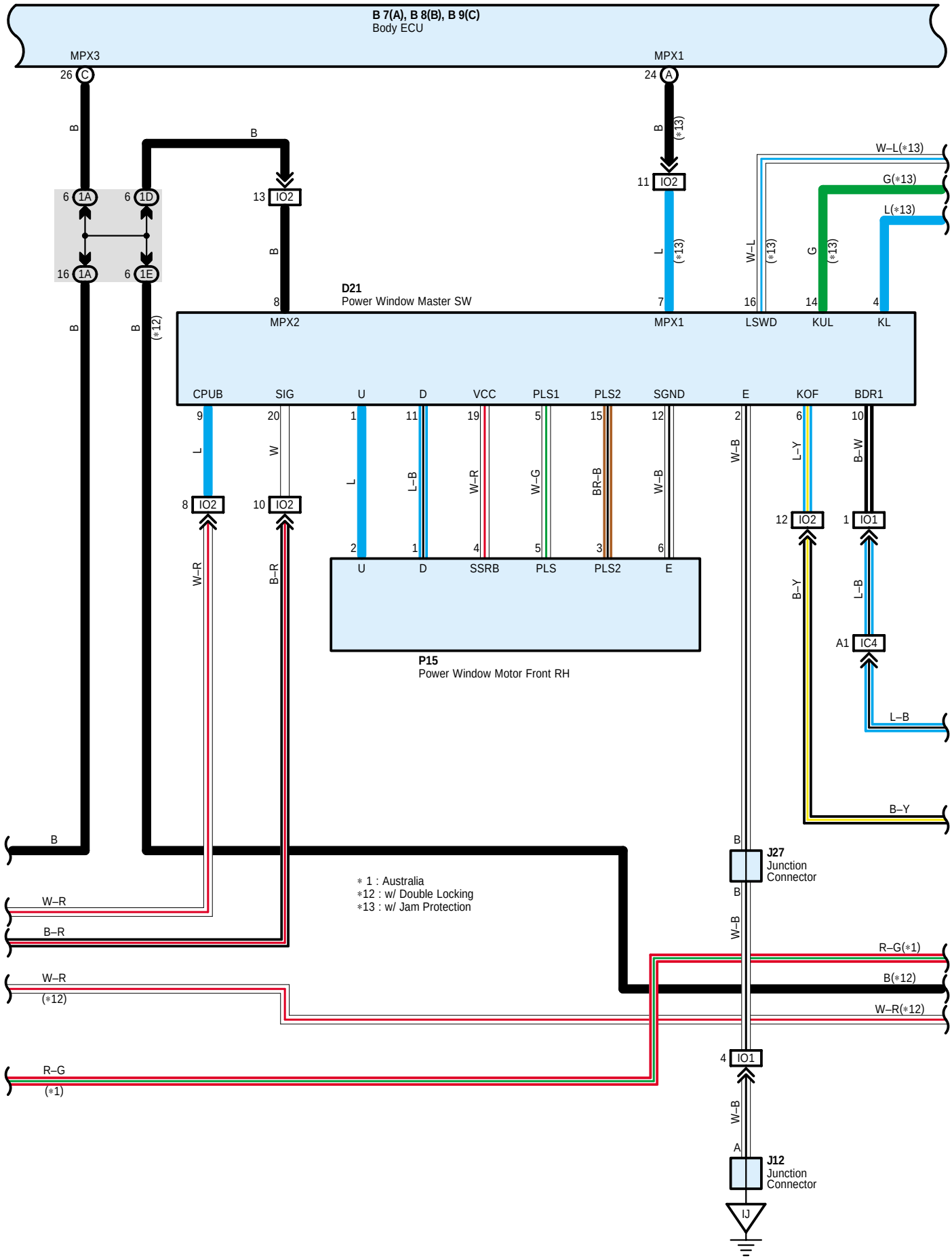
B 7(A), B 8(B), B 9(C)
Body ECU
MPX3
MPX1
D21
Power Window Master SW
MPX2
MPX1
LSWD
KUL
KL
CPUB
SIG
U
D
VCC
PLS1
PLS2
SGND
E
KOF
BDR1
P15
Power Window Motor Front RH
SSRB
PLS
J27
Junction Connector
J12
Junction Connector
IO2
IO1
IC4
IJ
∗1 : Australia
∗12 : w/ Double Locking
∗13 : w/ Jam Protection

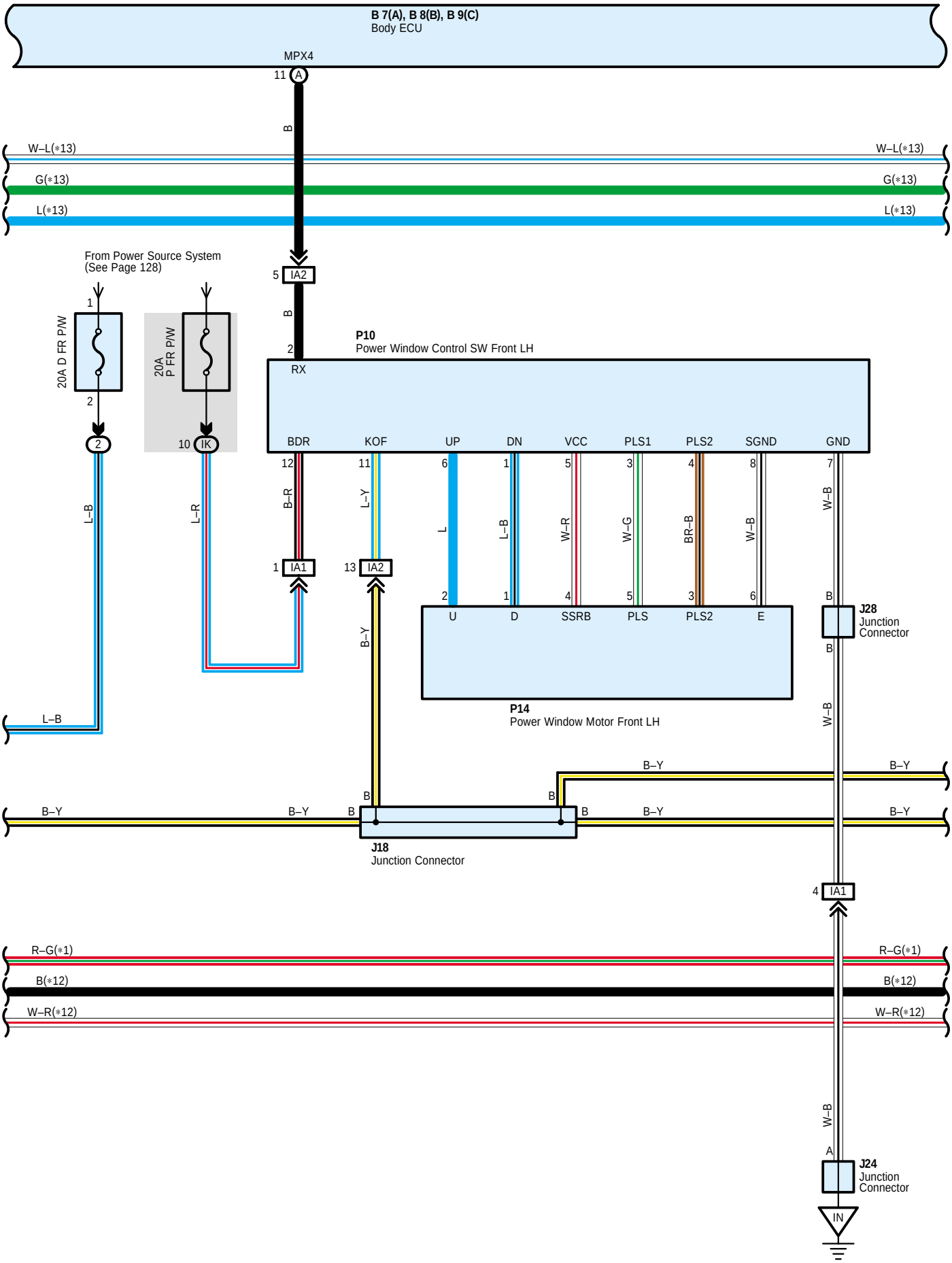
B 7(A), B 8(B), B 9(C)
Body ECU
MPX4
11 A
B
W–L(*13)
G(*13)
L(*13)
From Power Source System
(See Page 128)
5 IA2
B
2
RX
P10
Power Window Control SW Front LH
1
20A D FR P/W
2
20A
P FR P/W
10 IK
2
L–B
L–R
BDR
KOF
UP
DN
VCC
PLS1
PLS2
SGND
GND
12
11
6
1
5
3
4
8
7
B–R
L–Y
L
L–B
W–R
W–G
BR–B
W–B
W–B
1 IA1
13 IA2
2
1
4
5
3
6
B
U
D
SSRB
PLS
PLS2
E
J28
Junction
Connector
B
B–Y
W–B
P14
Power Window Motor Front LH
L–B
B–Y
B–Y
B
B
B–Y
B–Y
B
B
B–Y
B–Y
J18
Junction Connector
4 IA1
R–G(*1)
B(*12)
W–R(*12)
R–G(*1)
B(*12)
W–R(*12)
W–B
A
J24
Junction
Connector
IN

Multiplex Communication System (RHD)

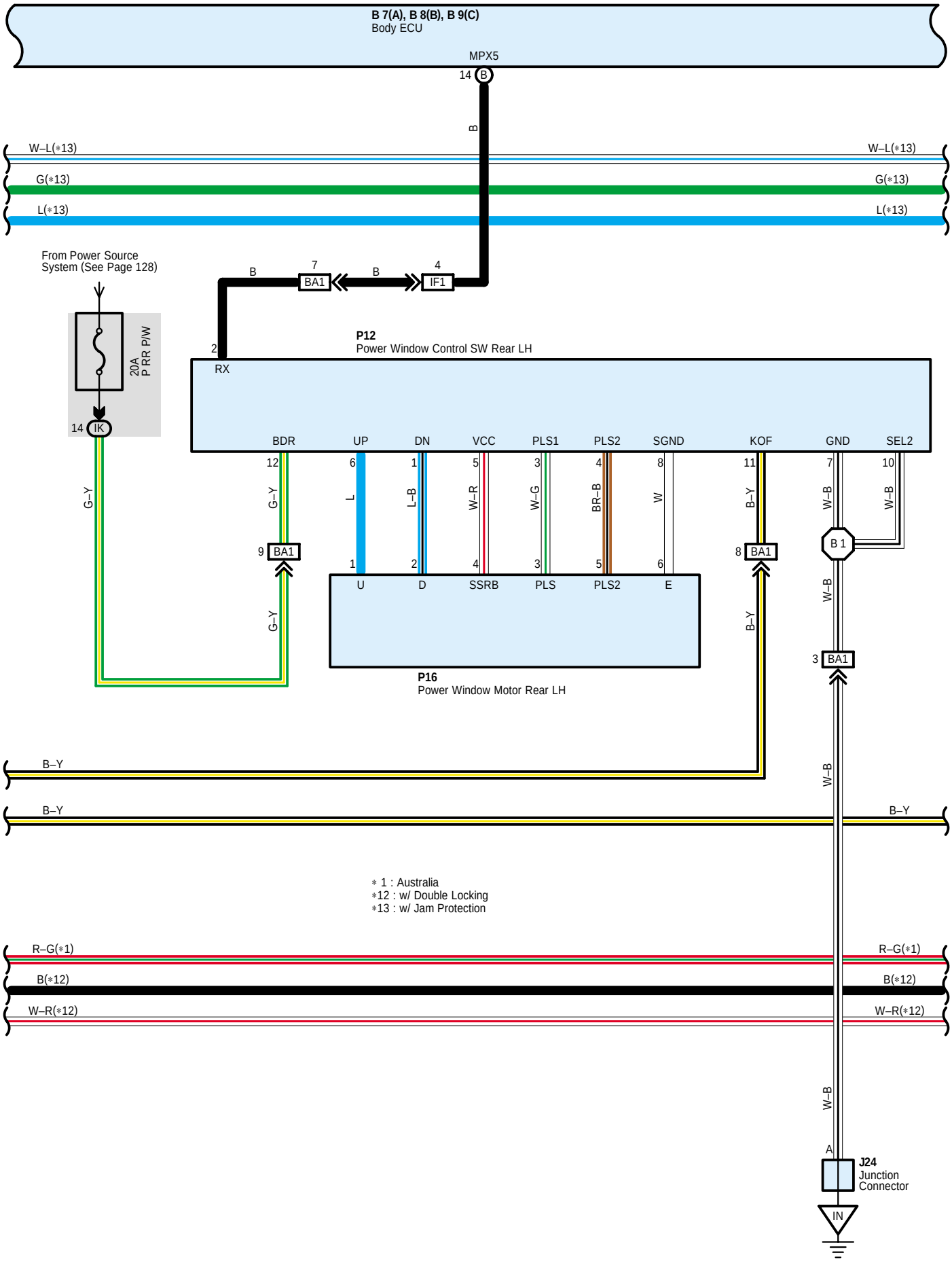

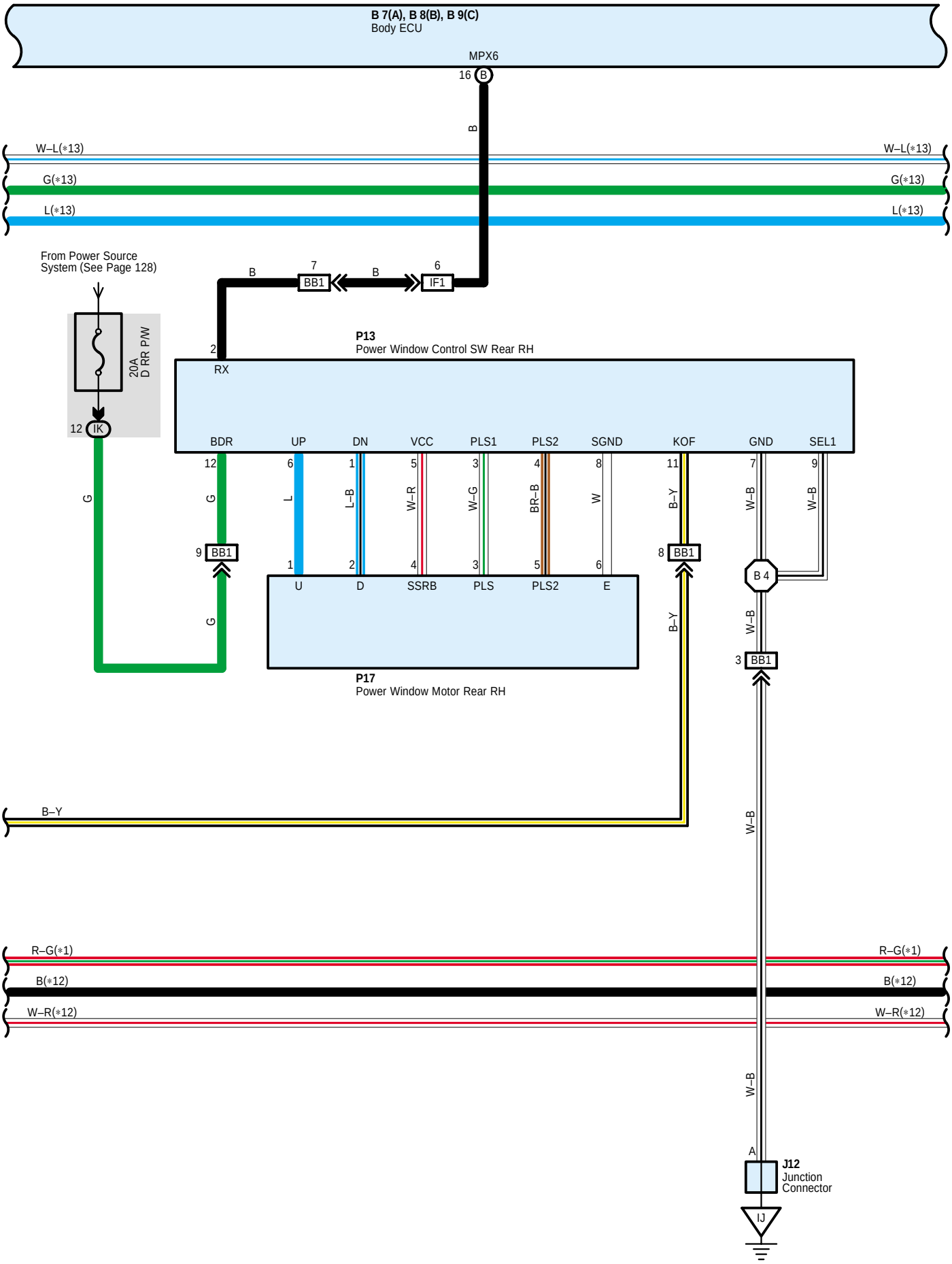
B 7(A), B 8(B), B 9(C)
Body ECU
MPX6
16 B
B
W–L(∗13)
G(∗13)
L(∗13)
From Power Source System (See Page 128)
B
7
BB1
B
6
IF1
20A D RR P/W
2
RX
12 IK
P13
Power Window Control SW Rear RH
BDR
UP
DN
VCC
PLS1
PLS2
SGND
KOF
GND
SEL1
12
6
1
5
3
4
8
11
7
9
G
L
L–B
W–R
W–G
BR–B
W
B–Y
W–B
W–B
9 BB1
1
2
4
3
5
6
8 BB1
B 4
U
D
SSRB
PLS
PLS2
E
B–Y
W–B
3 BB1
P17
Power Window Motor Rear RH
B–Y
W–B
R–G(∗1)
B(∗12)
W–R(∗12)
W–B
A
J12
Junction Connector
IJ

Multiplex Communication System (RHD)

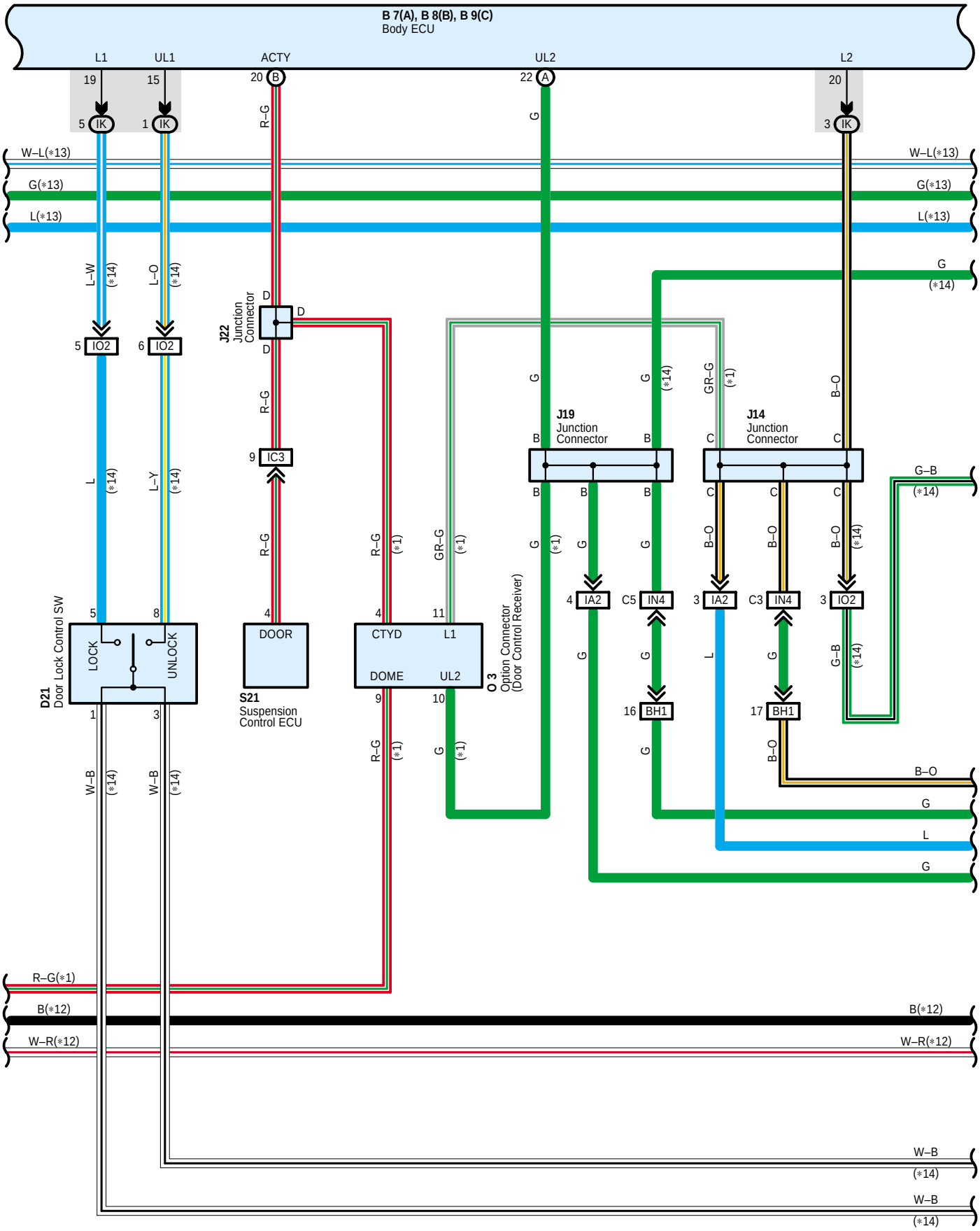

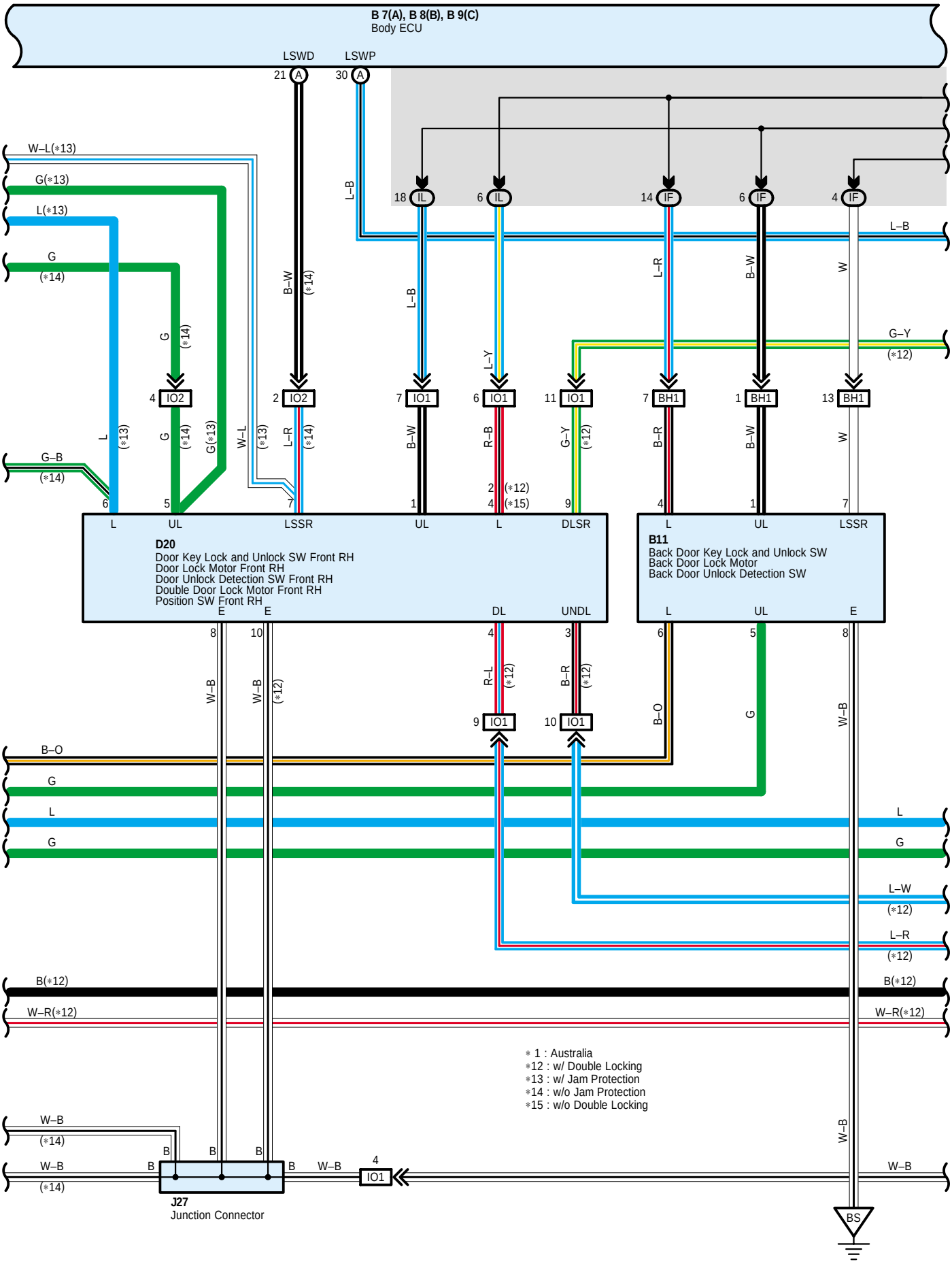
B 7(A), B 8(B), B 9(C)
Body ECU
LSWD
LSWP
D20
Door Key Lock and Unlock SW Front RH
Door Lock Motor Front RH
Door Unlock Detection SW Front RH
Double Door Lock Motor Front RH
Position SW Front RH
B11
Back Door Key Lock and Unlock SW
Back Door Lock Motor
Back Door Unlock Detection SW
J27
Junction Connector
∗ 1 : Australia
∗12 : w/ Double Locking
∗13 : w/ Jam Protection
∗14 : w/o Jam Protection
∗15 : w/o Double Locking

Multiplex Communication System (RHD)

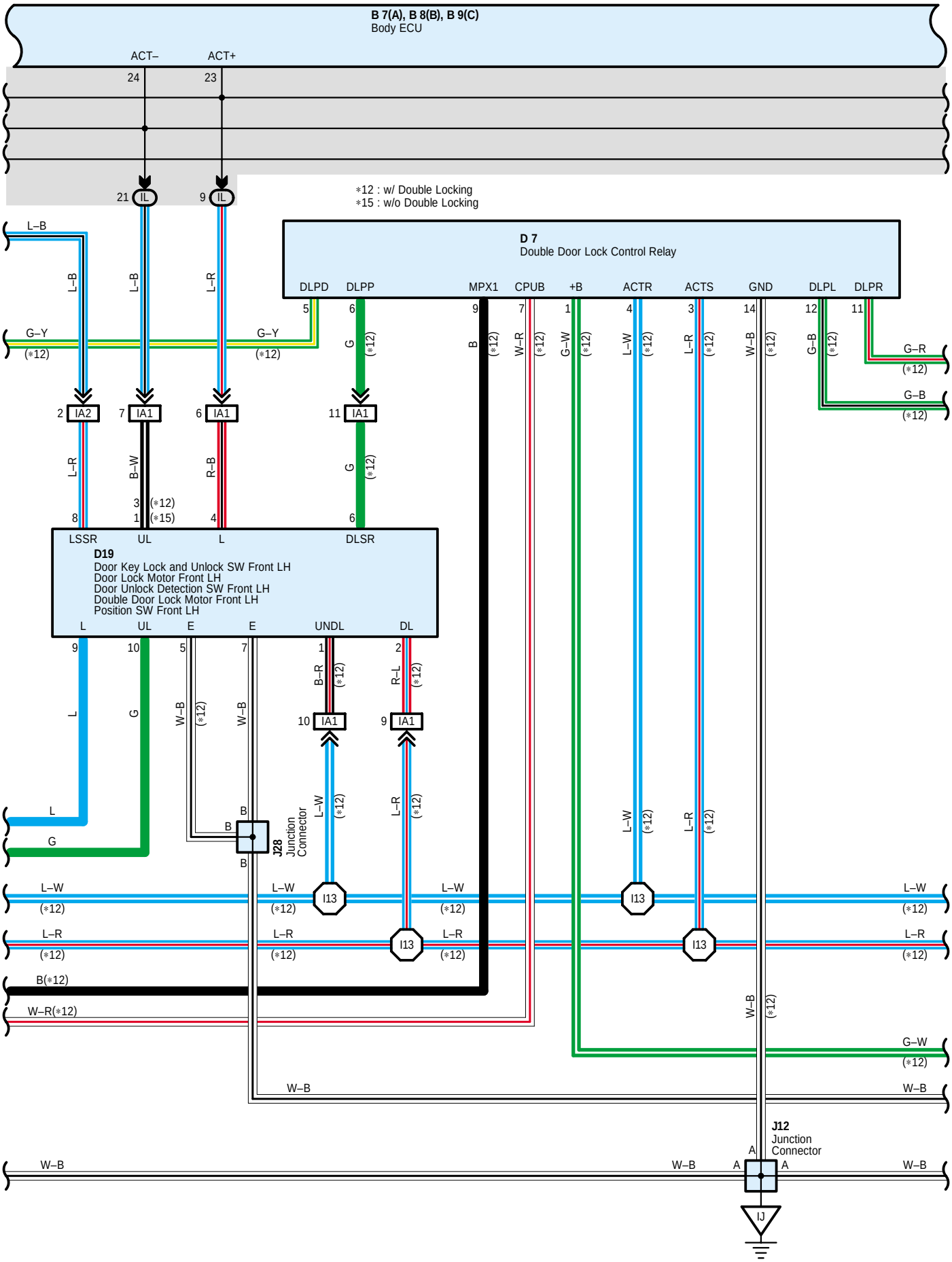

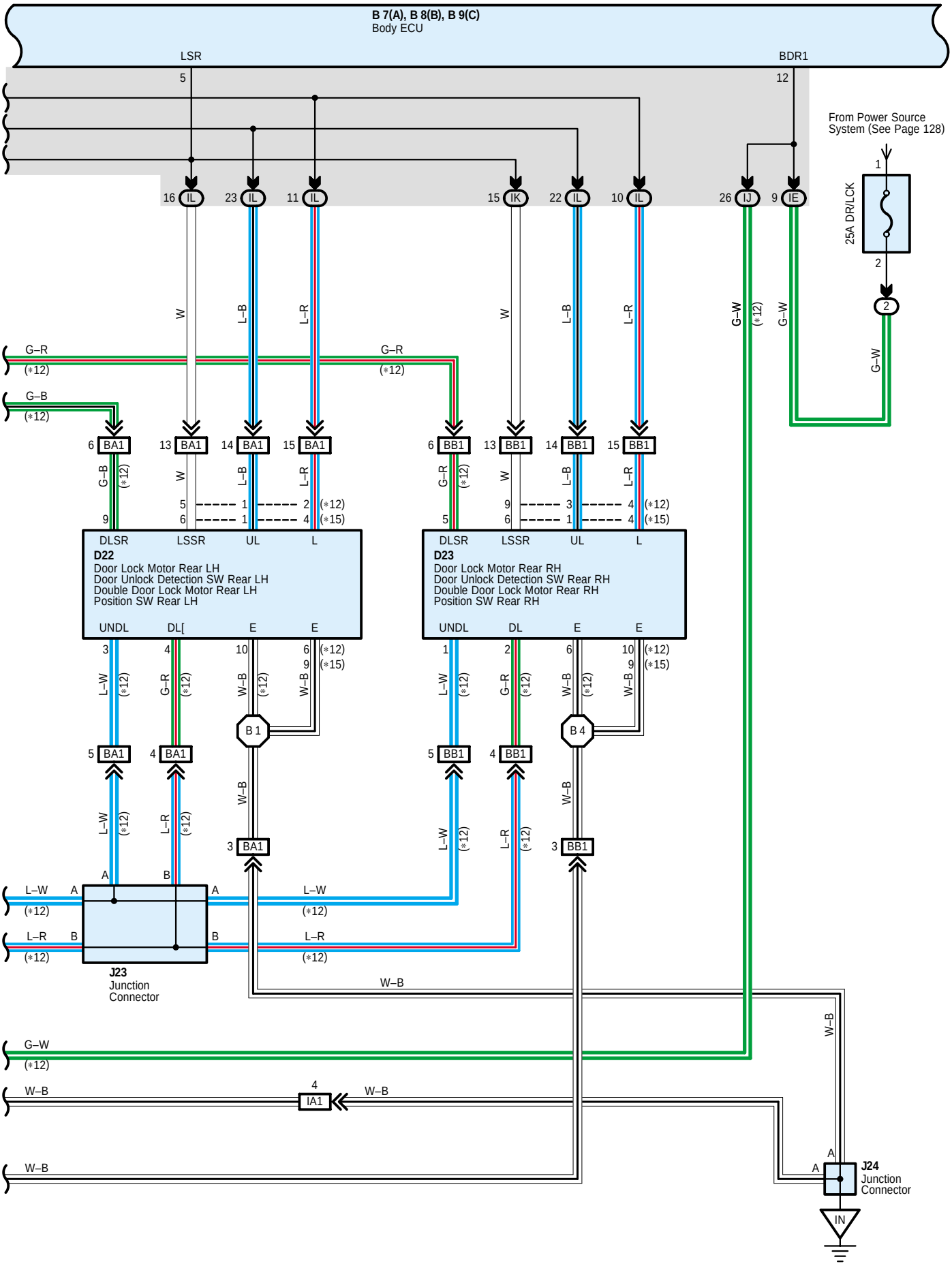
B 7(A), B 8(B), B 9(C)
Body ECU
LSR
BDR1
From Power Source System (See Page 128)
25A DR/LCK
D22
Door Lock Motor Rear LH
Door Unlock Detection SW Rear LH
Double Door Lock Motor Rear LH
Position SW Rear LH
D23
Door Lock Motor Rear RH
Door Unlock Detection SW Rear RH
Double Door Lock Motor Rear RH
Position SW Rear RH
J23
Junction Connector
J24
Junction Connector

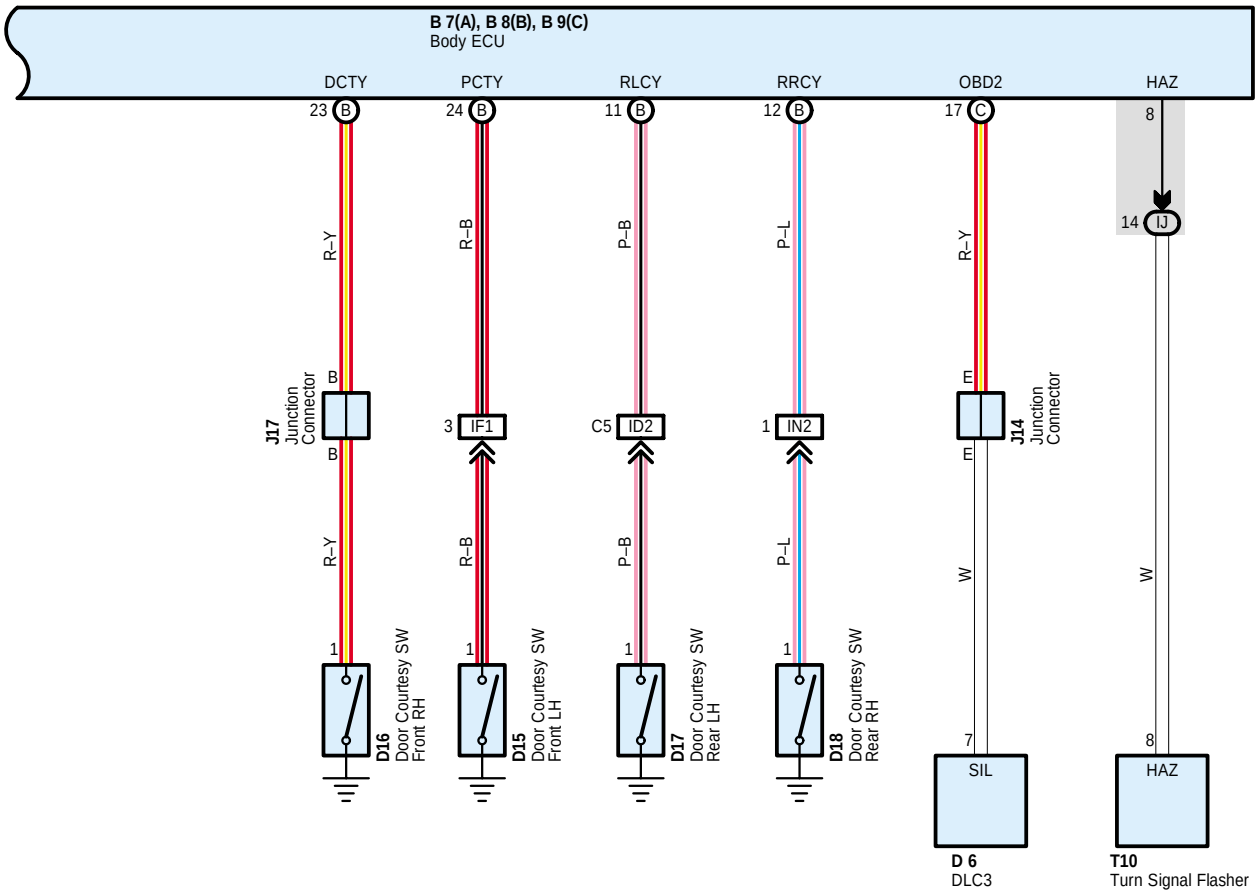
B 7(A), B 8(B), B 9(C)
Body ECU
DCTY
PCTY
RLCY
RRCY
OBD2
HAZ
23 B
24 B
11 B
12 B
17 C
8
14 IJ
R–Y
R–B
P–B
P–L
R–Y
J17
Junction
Connector
B
B
3 IF1
C5 ID2
1 IN2
E
E
J14
Junction
Connector
R–Y
R–B
P–B
P–L
W
W
1
1
1
1
D16
Door Courtesy SW
Front RH
D15
Door Courtesy SW
Front LH
D17
Door Courtesy SW
Rear LH
D18
Door Courtesy SW
Rear RH
7
SIL
8
HAZ
D 6
DLC3
T10
Turn Signal Flasher

System Outline

Multiplex communication system is controlled by body ECU, theft deterrent ECU, double lock ECU, etc.
For example, when door is opened, signal from door courtesy SW is transmitted to body ECU and turns on indoor lamp.
See new car features or repair manual for detail.

Service Hints

Body ECU

22–Ground : Approx. 12 volts with ignition SW at ACC or ON position
11, 12–Ground : Always approx. 12 volts
1, 10–Ground : Approx. 12 volts with ignition SW at ON position
4, 16–Ground : Always continuity

T8 Theft Deterrent ECU

2, 3–Ground : Always approx. 12 volts
10–Ground : Approx. 12 volts with ignition SW at ON position
29–Ground : Always continuity

○ : **Parts Location**

Code		See Page	Code		See Page	Code		See Page
B7	A	68 (RHD)	E10	B	69 (RHD)	J28		72 (*15)
B8	B	68 (RHD)	F13		69 (RHD)			74 (*16)
B9	C	68 (RHD)	H5		59 (*10)	J29		72 (*15)
B10		72 (*15)			61 (*11)			74 (*16)
		74 (*16)			63 (*12)	J30		72 (*15)
B11		72 (*15)			65 (*13)			74 (*16)
		74 (*16)			67 (*14)	J31		72 (*15)
B12		76 (*17)	H6		59 (*10)			74 (*16)
		77 (*18)			61 (*11)	J33		72 (*15)
B15		76 (*17)			63 (*12)			74 (*16)
		77 (*18)			65 (*13)	K2		70 (RHD)
C9	A	69 (RHD)			67 (*14)	L4		73 (*15)
C10	B	69 (RHD)	H8		59 (*10)			75 (*16)
C11	C	69 (RHD)			61 (*11)	M9		73 (*15)
C14		69 (RHD)			63 (*12)			75 (*16)
C15		69 (RHD)			65 (*13)	O3		71 (RHD)
D6		69 (RHD)			67 (*14)	O4		73 (*15)
D7		69 (RHD)	H9		59 (*10)			75 (*16)
D10		72 (*15)			61 (*11)	P8		73 (*15)
		74 (*16)			63 (*12)			75 (*16)
D11		72 (*15)			65 (*13)	P10		73 (*15)
		74 (*16)			67 (*14)			75 (*16)
D12		72 (*15)	I13		70 (RHD)	P12		73 (*15)
		74 (*16)	I15		72 (*15)	P13		73 (*15)
D13		72 (*15)			74 (*16)	P14		73 (*15)
D14		72 (*15)	J4		59 (*10)			75 (*16)
D15		72 (*15)			61 (*11)	P15		73 (*15)
		74 (*16)			63 (*12)			75 (*16)
D16		72 (*15)			65 (*13)	P16		73 (*15)
		74 (*16)			67 (*14)	P17		73 (*15)
D17		72 (*15)	J7	A	70 (RHD)	R10		71 (RHD)
D18		72 (*15)	J8	B	70 (RHD)	S21		71 (RHD)
D19		72 (*15)	J9		70 (RHD)	T1		59 (*10)
		74 (*16)	J12		70 (RHD)			61 (*11)
D20		72 (*15)	J13		70 (RHD)			63 (*12)
		74 (*16)	J14		70 (RHD)			65 (*13)
D21		72 (*15)	J15		70 (RHD)			67 (*14)
		74 (*16)	J16		70 (RHD)	T8		71 (RHD)
D22		72 (*15)	J17		70 (RHD)	T9		71 (RHD)
D23		72 (*15)	J18		70 (RHD)	T10		71 (RHD)
E5		58 (*10)	J19		70 (RHD)	T11	A	75 (*16)
		60 (*11)	J22		70 (RHD)		B	73 (*15)
		62 (*12)	J23		70 (RHD)	V14		73 (*15)
		64 (*13)	J24		70 (RHD)			75 (*16)
		66 (*14)	J27		72 (*15)	V15		73 (*15)
E9	A	69 (RHD)			74 (*16)			75 (*16)

* 1 : LHD 1GR-FE * 2 : LHD 3RZ-FE * 3 : LHD 1KD-FTV * 4 : LHD 1KZ-TE * 5 : LHD 5L-E * 6 : LHD 5-Door * 7 : LHD 3-Door
* 8 : LHD 8Way Power Seat * 9 : LHD Except 8Way Power Seat * 10 : RHD 1GR-FE * 11 : RHD 3RZ-FE * 12 : RHD 1KD-FTV
* 13 : RHD 1KZ-TE * 14 : RHD 5L-E * 15 : RHD 5-Door * 16 : RHD 3-Door * 17 : RHD 8Way Power Seat
* 18 : RHD Except 8Way Power Seat

: **Relay Blocks**

Code	See Page	Relay Blocks (Relay Block Location)
2	23	Engine Room R/B (Engine Compartment Left)

: **Junction Block and Wire Harness Connector**

Code	See Page	Junction Block and Wire Harness (Connector Location)
IA	28 (RHD)	Roof Wire and Driver Side J/B (Lower Finish Panel)
IB	28 (RHD)	Engine Room Main Wire and Driver Side J/B (Lower Finish Panel)
IC		
ID		
IE		
IF	28 (RHD)	Floor Wire and Driver Side J/B (Lower Finish Panel)
IG	29 (RHD)	Instrument Panel Wire and Driver Side J/B (Lower Finish Panel)
IH		
IJ		
IK		
IL		
1A	32 (RHD)	Instrument Panel Wire and J/B No.1 (Instrument Panel Reinforcement Right)
1B		
1C		
1D		
1E		
2A	34	Instrument Panel Wire and J/B No.2 (Instrument Panel Reinforcement Center)
2B		
2E		
3A	36 (RHD)	Instrument Panel Wire and J/B No.3 (Instrument Panel Reinforcement Left)
3B		
3C		
3D		
3E		

: Connector Joining Wire Harness and Wire Harness

Code	See Page	Joining Wire Harness and Wire Harness (Connector Location)
IA1	112 (RHD)	Front Door LH Wire and Instrument Panel Wire (Left Kick Panel)
IA2		
IC3	112 (RHD)	Instrument Panel Wire and Engine Room Main Wire (Left Kick Panel)
IC4		
ID1	114 (RHD)	Instrument Panel Wire and Floor No.2 Wire (Left Kick Panel)
ID2		
IE1	114 (RHD)	Roof Wire and Instrument Panel Wire (Left Side of the Driver Side J/B)
IF1	114 (RHD)	Instrument Panel Wire and Instrument Panel Wire (Near the J/B No.1)
IL3	116 (RHD)	Engine Wire and Instrument Panel Wire (Left Side of the Blower Unit)
IM1	116 (RHD)	Instrument Panel Wire and Engine Room Main Wire (Right Kick Panel)
IM4		
IM5		
IN2	118 (RHD)	Instrument Panel Wire and Floor Wire (Right Kick Panel)
IN4		
IO1	118 (RHD)	Front Door RH Wire and Instrument Panel Wire (Right Kick Panel)
IO2		
BA1	120 (*15)	Rear Door LH Wire and Instrument Panel Wire (Center Pillar LH)
BB1	120 (*15)	Rear Door RH Wire and Instrument Panel Wire (Center Pillar RH)
BH1	122 (*15)	Back Door No.1 Wire and Floor Wire (Right Quarter Panel Inner)
	124 (*16)	

: Ground Points

Code	See Page	Ground Points Location
EB	102 (*10)	Front Left Fender
	104 (*11)	
	106 (*12)	
	108 (*13)	
	110 (*14)	
ED	104 (*11)	Ignition Coil Bracket
EE	104 (*11)	Intake Manifold
EF	106 (*12)	Rear Part of Cylinder Block
EH	108 (*13)	
EI	110 (*14)	
EV	102 (*10)	Rear Side of Left Bank Cylinder Block
IJ	112 (RHD)	Right Kick Panel
IL	112 (RHD)	Instrument Panel Brace RH
IN	112 (RHD)	Left Kick Panel
BO	120 (*15)	Under the Front Passenger's Seat
	124 (*16)	
BR	120 (*15)	Left Quarter Panel Inner
	124 (*16)	
BS	120 (*15)	Back Door Panel Center
	124 (*16)	
BT	120 (*15)	Right Quarter Panel Inner
	124 (*16)	

* 1 : LHD 1GR-FE * 2 : LHD 3RZ-FE * 3 : LHD 1KD-FTV * 4 : LHD 1KZ-TE * 5 : LHD 5L-E * 6 : LHD 5-Door * 7 : LHD 3-Door
* 8 : LHD 8Way Power Seat * 9 : LHD Except 8Way Power Seat * 10 : RHD 1GR-FE * 11 : RHD 3RZ-FE * 12 : RHD 1KD-FTV
* 13 : RHD 1KZ-TE * 14 : RHD 5L-E * 15 : RHD 5-Door * 16 : RHD 3-Door * 17 : RHD 8Way Power Seat
* 18 : RHD Except 8Way Power Seat

: **Splice Points**

Code	See Page	Wire Harness with Splice Points	Code	See Page	Wire Harness with Splice Points
I5	114 (RHD)	Instrument Panel Wire	B2	122 (*15)	Roof Wire
I7				124 (*16)	
I13			B4	122 (*15)	Rear Door No.1 Wire RH
B1	122 (*15)	Rear Door No.1 Wire LH			

* 1 : LHD 1GR-FE * 2 : LHD 3RZ-FE * 3 : LHD 1KD-FTV * 4 : LHD 1KZ-TE * 5 : LHD 5L-E * 6 : LHD 5-Door * 7 : LHD 3-Door
* 8 : LHD 8Way Power Seat * 9 : LHD Except 8Way Power Seat * 10 : RHD 1GR-FE * 11 : RHD 3RZ-FE * 12 : RHD 1KD-FTV
* 13 : RHD 1KZ-TE * 14 : RHD 5L-E * 15 : RHD 5-Door * 16 : RHD 3-Door * 17 : RHD 8Way Power Seat
* 18 : RHD Except 8Way Power Seat

Headlight (w/ Daytime Running Light)

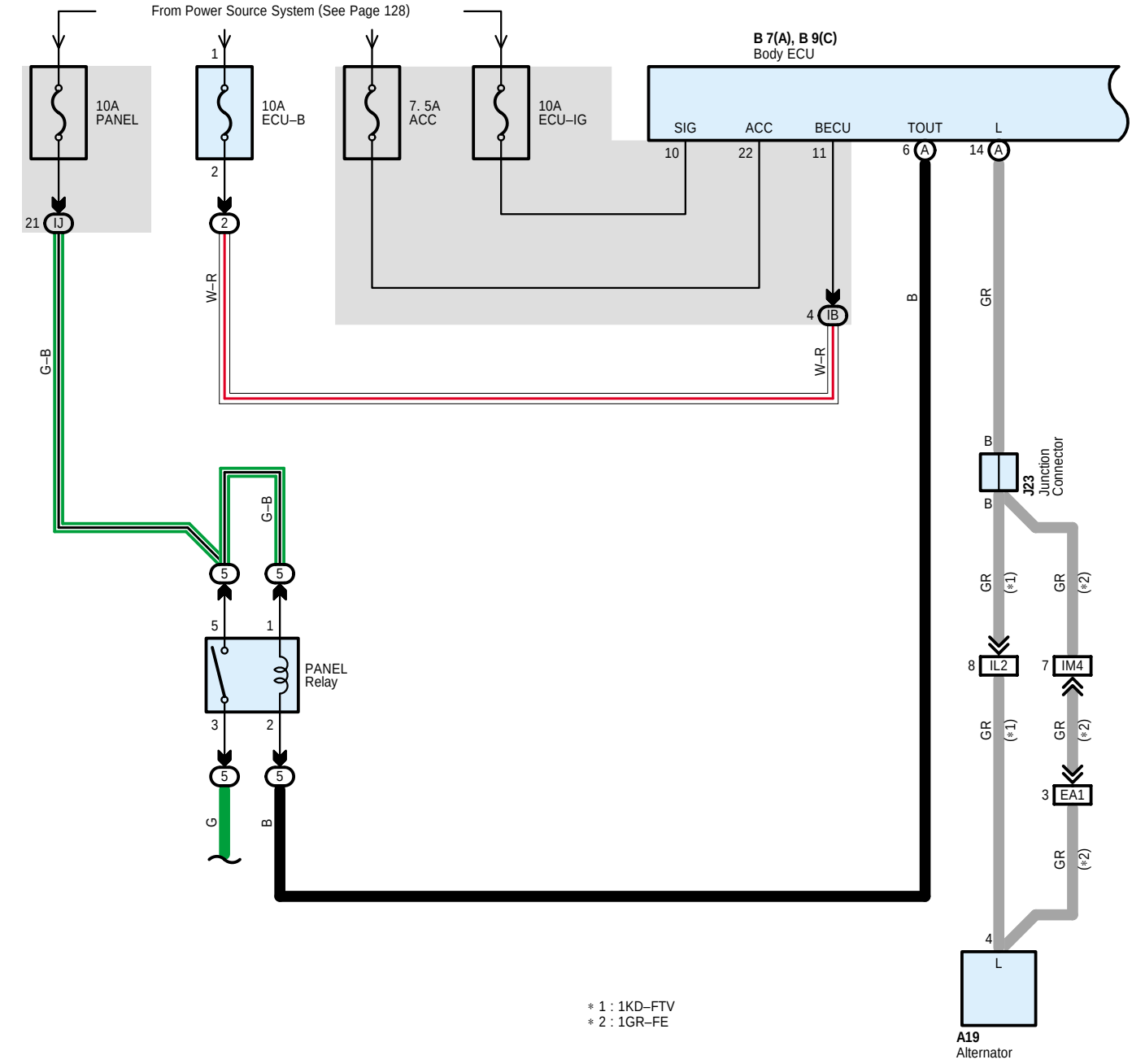

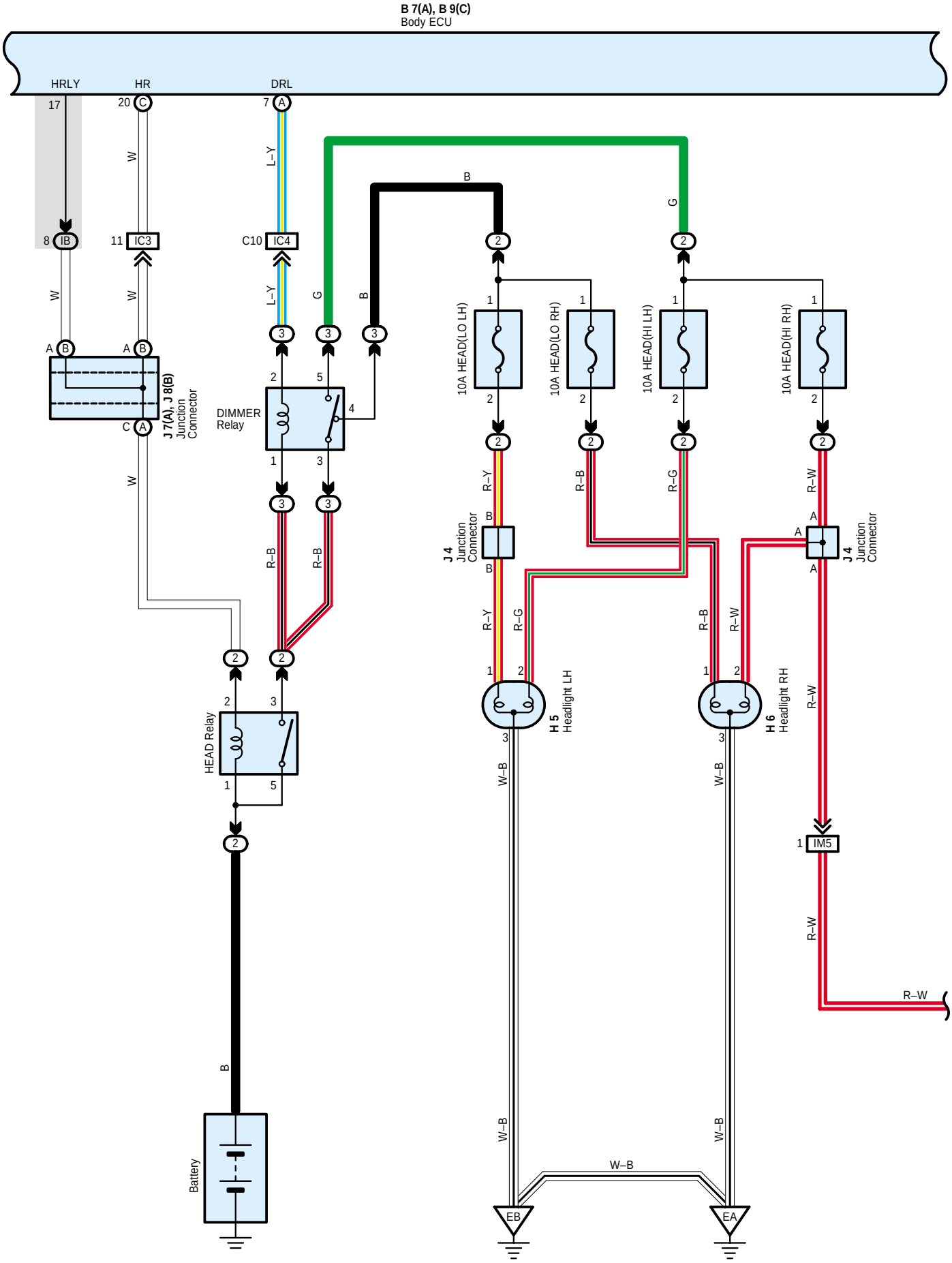
B 7(A), B 9(C)
Body ECU
HRLY
HR
DRL
17
20 C
7 A
W
L–Y
B
G
8 IB
11 IC3
C10 IC4
A B
J 7(A), J 8(B)
Junction
Connector
C A
DIMMER
Relay
10A HEAD(LO LH)
10A HEAD(LO RH)
10A HEAD(HI LH)
10A HEAD(HI RH)
R–Y
R–B
R–G
R–W
J 4
Junction
Connector
HEAD Relay
H 5
Headlight LH
H 6
Headlight RH
W–B
1 IM5
Battery
EB
EA

Headlight (w/ Daytime Running Light)

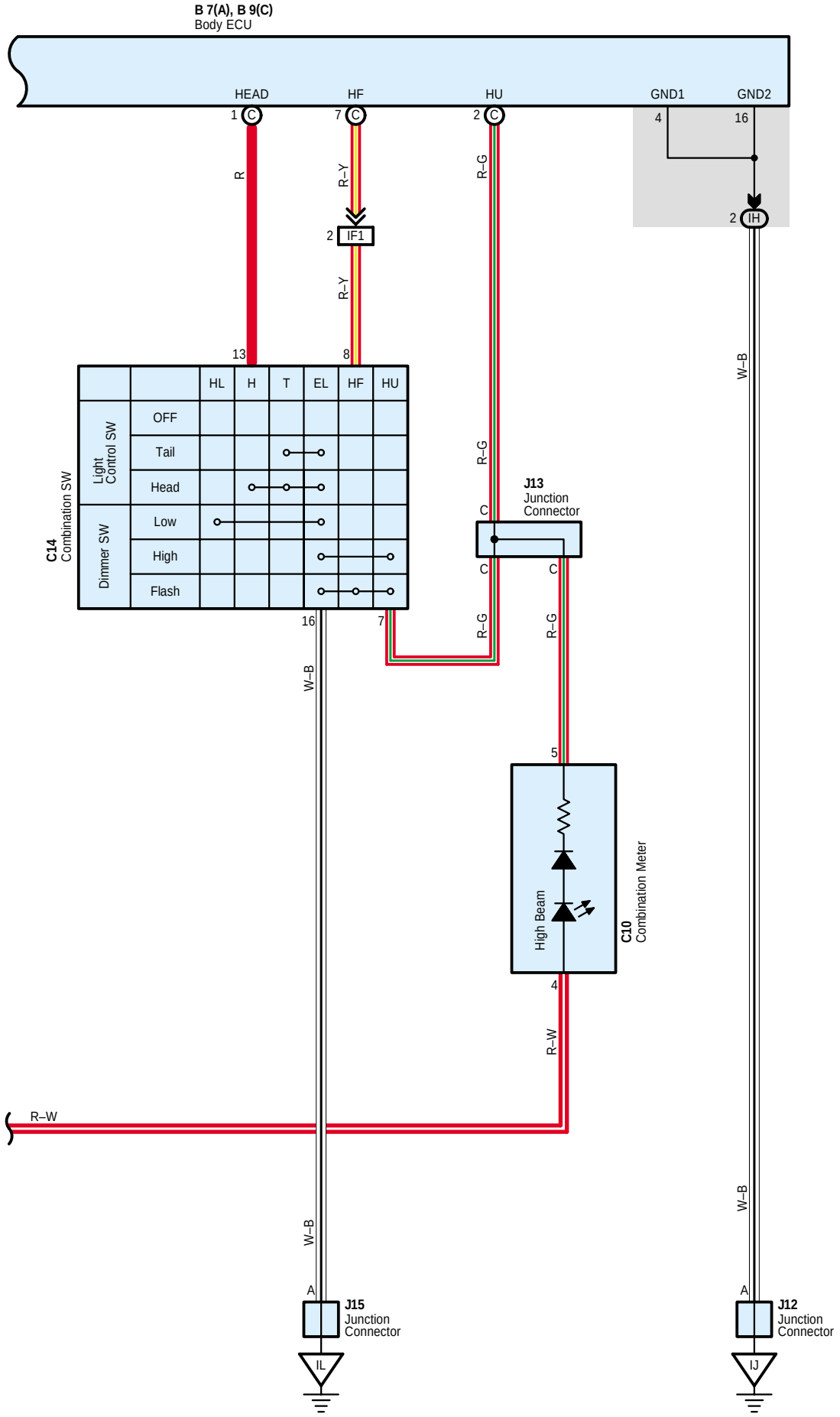

System Outline

The daytime running light system operates and the headlight and taillight are turned ON when the ignition SW is ON and the body ECU TERMINAL ”L” ON condition is met with the light control SW at OFF position.

Operation Cancel Condition

∗ Ignition SW is turned OFF from ON
∗ Light control SW is at HEAD or TAIL position

Service Hints

HEAD Relay

3–5 : Closed with the light control SW at HEAD position or the dimmer SW at FLASH position
Closed with the engine running

DIMMER Relay

3–5 : Closed with the dimmer SW at HIGH or FLASH position

: Parts Location

Code	See Page	Code	See Page	Code	See Page
A19	38 (*1)	H5	41 (*2)	J4	41 (*2)
	40 (*2)		43 (*3)		43 (*3)
	42 (*3)		45 (*4)		45 (*4)
	44 (*4)		47 (*5)		47 (*5)
	46 (*5)	H6	39 (*1)	J7 A	50 (LHD)
B7 A	48 (LHD)		41 (*2)	J8 B	50 (LHD)
B9 C	48 (LHD)		43 (*3)	J12	50 (LHD)
C10	49 (LHD)		45 (*4)	J13	50 (LHD)
C14	49 (LHD)		47 (*5)	J15	50 (LHD)
H5	39 (*1)	J4	39 (*1)	J23	50 (LHD)

: Relay Blocks

Code	See Page	Relay Blocks (Relay Block Location)
2	23	Engine Room R/B (Engine Compartment Left)
3	24	Engine Room R/B No.3 (Engine Compartment Left)
5	25 (LHD)	Passenger Side R/B (Right Kick Panel)

: Junction Block and Wire Harness Connector

Code	See Page	Junction Block and Wire Harness (Connector Location)
IB	26 (LHD)	Engine Room Main Wire and Driver Side J/B (Lower Finish Panel)
IH	27 (LHD)	Instrument Panel Wire and Driver Side J/B (Lower Finish Panel)
IJ		

: Connector Joining Wire Harness and Wire Harness

Code	See Page	Joining Wire Harness and Wire Harness (Connector Location)
EA1	78 (*1)	Engine No.2 Wire and Engine Room Main Wire (Near the Engine Room R/B)
IC3	88 (LHD)	Instrument Panel Wire and Engine Room Main Wire (Left Kick Panel)
IC4		
IF1	90 (LHD)	Instrument Panel Wire and Instrument Panel Wire (Near the J/B No.1)
IL2	92 (LHD)	Engine Wire and Instrument Panel Wire (Right Side of the Blower Unit)
IM4	92 (LHD)	Instrument Panel Wire and Engine Room Main Wire (Right Kick Panel)
IM5		

* 1 : LHD 1GR–FE * 2 : LHD 3RZ–FE * 3 : LHD 1KD–FTV * 4 : LHD 1KZ–TE * 5 : LHD 5L–E * 6 : LHD 5–Door * 7 : LHD 3–Door
* 8 : LHD 8Way Power Seat * 9 : LHD Except 8Way Power Seat * 10 : RHD 1GR–FE * 11 : RHD 3RZ–FE * 12 : RHD 1KD–FTV
* 13 : RHD 1KZ–TE * 14 : RHD 5L–E * 15 : RHD 5–Door * 16 : RHD 3–Door * 17 : RHD 8Way Power Seat
* 18 : RHD Except 8Way Power Seat

▽ : **Ground Points**

Code	See Page	Ground Points Location
EA	78 (*1)	Front Right Fender
	80 (*2)	
	82 (*3)	
	84 (*4)	
	86 (*5)	
EB	78 (*1)	Front Left Fender
	80 (*2)	
	82 (*3)	
	84 (*4)	
	86 (*5)	
IJ	88 (LHD)	Left Kick Panel
IL	88 (LHD)	Near the Right Side of Steering Column

* 1 : LHD 1GR-FE * 2 : LHD 3RZ-FE * 3 : LHD 1KD-FTV * 4 : LHD 1KZ-TE * 5 : LHD 5L-E * 6 : LHD 5-Door * 7 : LHD 3-Door
* 8 : LHD 8Way Power Seat * 9 : LHD Except 8Way Power Seat * 10 : RHD 1GR-FE * 11 : RHD 3RZ-FE * 12 : RHD 1KD-FTV
* 13 : RHD 1KZ-TE * 14 : RHD 5L-E * 15 : RHD 5-Door * 16 : RHD 3-Door * 17 : RHD 8Way Power Seat
* 18 : RHD Except 8Way Power Seat

Headlight (w/o Daytime Running Light)

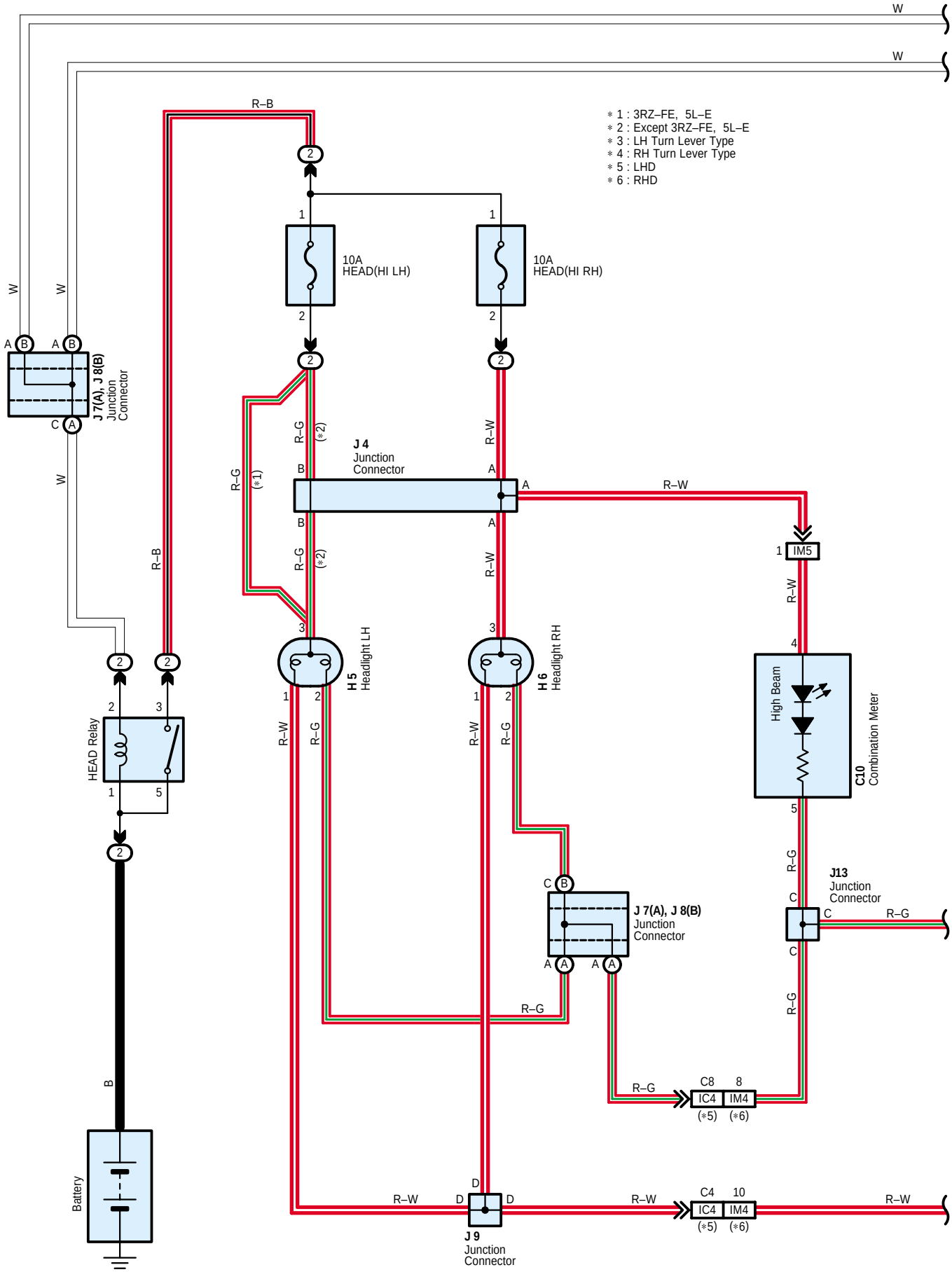

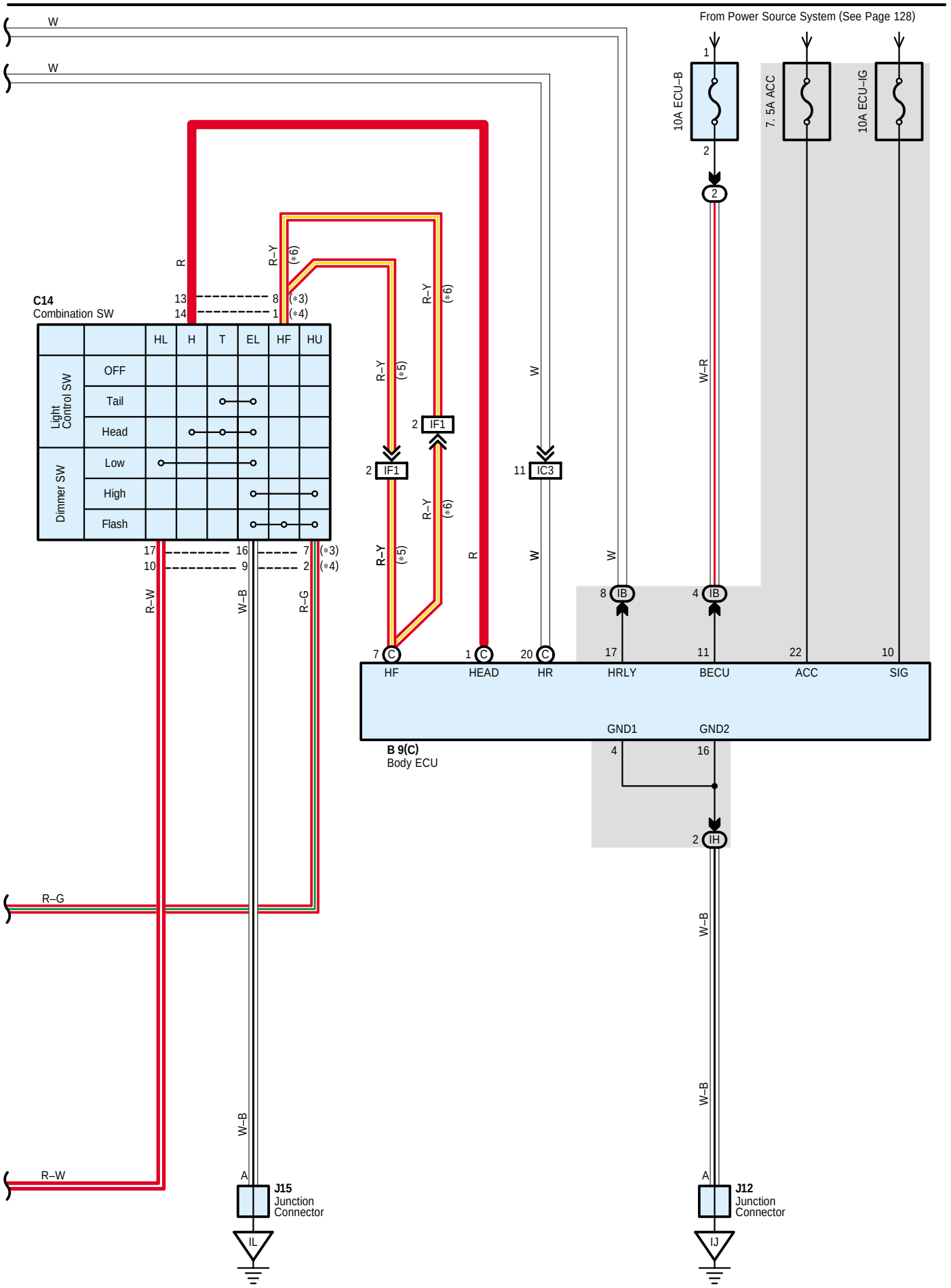
From Power Source System (See Page 128)
10A ECU–B
7. 5A ACC
10A ECU–IG
C14
Combination SW
HL
H
T
EL
HF
HU
Light Control SW
OFF
Tail
Head
Dimmer SW
Low
High
Flash
IF1
IC3
IB
IH
B 9(C)
Body ECU
HF
HEAD
HR
HRLY
BECU
ACC
SIG
GND1
GND2
J15
Junction Connector
J12
Junction Connector
IL
IJ
W
W–R
R–Y
R
R–W
W–B
R–G

Headlight (w/o Daytime Running Light)

Service Hints

HEAD Relay

5–3 : Closed with the light control SW at HEAD position or the dimmer SW at FLASH position

: Parts Location

Code		See Page	Code	See Page	Code		See Page
B9	C	48 (LHD)	H6	39 (*1)	J4		61 (*11)
		68 (RHD)		41 (*2)			63 (*12)
C10		49 (LHD)		43 (*3)			65 (*13)
		69 (RHD)		45 (*4)			67 (*14)
C14		49 (LHD)		47 (*5)	J7	A	50 (LHD)
		69 (RHD)		59 (*10)			70 (RHD)
H5		39 (*1)		61 (*11)	J8	B	50 (LHD)
		41 (*2)		63 (*12)			70 (RHD)
		43 (*3)		65 (*13)	J9		50 (LHD)
		45 (*4)		67 (*14)			70 (RHD)
		47 (*5)	J4	39 (*1)	J12		50 (LHD)
		59 (*10)		41 (*2)			70 (RHD)
		61 (*11)		43 (*3)	J13		50 (LHD)
		63 (*12)		45 (*4)			70 (RHD)
		65 (*13)		47 (*5)	J15		50 (LHD)
		67 (*14)		59 (*10)			70 (RHD)

: Relay Blocks

Code	See Page	Relay Blocks (Relay Block Location)
2	23	Engine Room R/B (Engine Compartment Left)

: Junction Block and Wire Harness Connector

Code	See Page	Junction Block and Wire Harness (Connector Location)
IB	26 (LHD)	Engine Room Main Wire and Driver Side J/B (Lower Finish Panel)
	28 (RHD)	
IH	27 (LHD)	Instrument Panel Wire and Driver Side J/B (Lower Finish Panel)
	29 (RHD)	

: Connector Joining Wire Harness and Wire Harness

Code	See Page	Joining Wire Harness and Wire Harness (Connector Location)
IC3	88 (LHD)	Instrument Panel Wire and Engine Room Main Wire (Left Kick Panel)
	112 (RHD)	
IC4	88 (LHD)	
	112 (RHD)	
IF1	90 (LHD)	Instrument Panel Wire and Instrument Panel Wire (Near the J/B No.1)
	114 (RHD)	
IM4	92 (LHD)	Instrument Panel Wire and Engine Room Main Wire (Right Kick Panel)
	116 (RHD)	
IM5	92 (LHD)	
	116 (RHD)	

* 1 : LHD 1GR–FE * 2 : LHD 3RZ–FE * 3 : LHD 1KD–FTV * 4 : LHD 1KZ–TE * 5 : LHD 5L–E * 6 : LHD 5–Door * 7 : LHD 3–Door
* 8 : LHD 8Way Power Seat * 9 : LHD Except 8Way Power Seat * 10 : RHD 1GR–FE * 11 : RHD 3RZ–FE * 12 : RHD 1KD–FTV
* 13 : RHD 1KZ–TE * 14 : RHD 5L–E * 15 : RHD 5–Door * 16 : RHD 3–Door * 17 : RHD 8Way Power Seat
* 18 : RHD Except 8Way Power Seat

▽ : **Ground Points**

Code	See Page	Ground Points Location
IJ	88 (LHD)	Left Kick Panel
	112 (RHD)	Right Kick Panel
IL	88 (LHD)	Near the Right Side of Steering Column
	112 (RHD)	Instrument Panel Brace RH

Front Fog Light

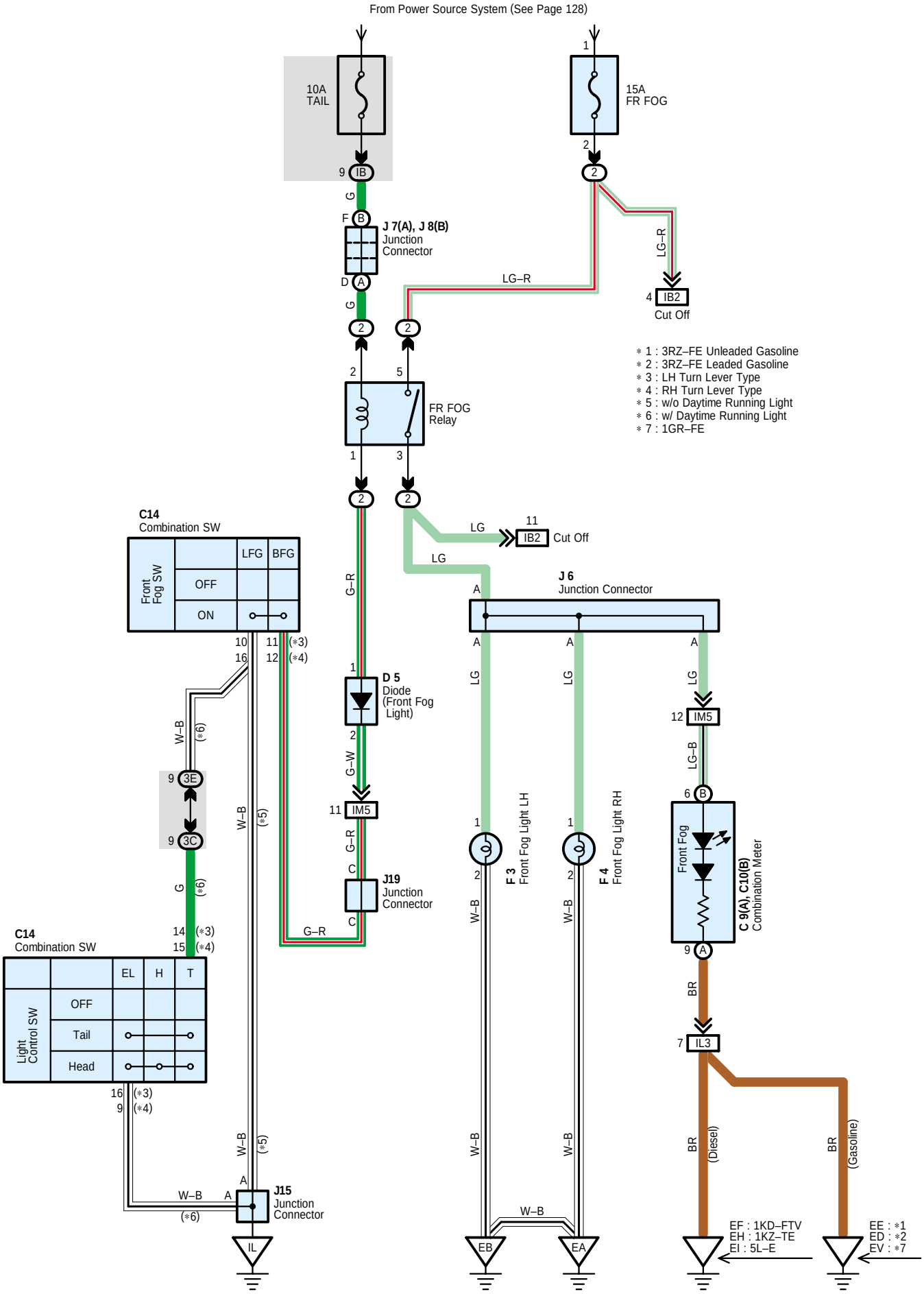

Service Hints

FR FOG Relay

5–3 : Closed with the light control SW at TAIL position and front fog light SW on

: Parts Location

Code		See Page	Code	See Page	Code		See Page
C9	A	49 (LHD)	F3	64 (*13)	J6		47 (*5)
		69 (RHD)		66 (*14)			59 (*10)
C10	B	49 (LHD)	F4	38 (*1)			61 (*11)
		69 (RHD)		40 (*2)			63 (*12)
C14		49 (LHD)		42 (*3)			65 (*13)
		69 (RHD)		44 (*4)			67 (*14)
D5		49 (LHD)		46 (*5)	J7	A	50 (LHD)
		69 (RHD)		58 (*10)			70 (RHD)
F3		38 (*1)		60 (*11)	J8	B	50 (LHD)
		40 (*2)		62 (*12)			70 (RHD)
		42 (*3)		64 (*13)	J15		50 (LHD)
		44 (*4)		66 (*14)			70 (RHD)
		46 (*5)	J6	39 (*1)	J19		50 (LHD)
		58 (*10)		41 (*2)			70 (RHD)
		60 (*11)		43 (*3)			
		62 (*12)		45 (*4)			

: Relay Blocks

Code	See Page	Relay Blocks (Relay Block Location)
2	23	Engine Room R/B (Engine Compartment Left)

: Junction Block and Wire Harness Connector

Code	See Page	Junction Block and Wire Harness (Connector Location)
IB	26 (LHD)	Engine Room Main Wire and Driver Side J/B (Lower Finish Panel)
	28 (RHD)	
3C	36 (LHD)	Instrument Panel Wire and J/B No.3 (Instrument Panel Reinforcement Right)
	36 (RHD)	Instrument Panel Wire and J/B No.3 (Instrument Panel Reinforcement Left)
3E	36 (LHD)	Instrument Panel Wire and J/B No.3 (Instrument Panel Reinforcement Right)
	36 (RHD)	Instrument Panel Wire and J/B No.3 (Instrument Panel Reinforcement Left)

: Connector Joining Wire Harness and Wire Harness

Code	See Page	Joining Wire Harness and Wire Harness (Connector Location)
IB2	88 (LHD)	Floor No.2 Wire and Engine Room Main Wire (Left Kick Panel)
	112 (RHD)	
IL3	92 (LHD)	Engine Wire and Instrument Panel Wire (Right Side of the Blower Unit)
	116 (RHD)	Engine Wire and Instrument Panel Wire (Left Side of the Blower Unit)
IM5	92 (LHD)	Instrument Panel Wire and Engine Room Main Wire (Right Kick Panel)
	116 (RHD)	

* 1 : LHD 1GR–FE * 2 : LHD 3RZ–FE * 3 : LHD 1KD–FTV * 4 : LHD 1KZ–TE * 5 : LHD 5L–E * 6 : LHD 5–Door * 7 : LHD 3–Door
* 8 : LHD 8Way Power Seat * 9 : LHD Except 8Way Power Seat * 10 : RHD 1GR–FE * 11 : RHD 3RZ–FE * 12 : RHD 1KD–FTV
* 13 : RHD 1KZ–TE * 14 : RHD 5L–E * 15 : RHD 5–Door * 16 : RHD 3–Door * 17 : RHD 8Way Power Seat
* 18 : RHD Except 8Way Power Seat

▽ : **Ground Points**

Code	See Page	Ground Points Location
EA	78 (*1)	Front Right Fender
	80 (*2)	
	82 (*3)	
	84 (*4)	
	86 (*5)	
	102 (*10)	
	104 (*11)	
	106 (*12)	
	108 (*13)	
	110 (*14)	
EB	78 (*1)	Front Left Fender
	80 (*2)	
	82 (*3)	
	84 (*4)	
	86 (*5)	
	102 (*10)	
	104 (*11)	
	106 (*12)	
	108 (*13)	
	110 (*14)	
ED	80 (*2)	Ignition Coil Bracket
	104 (*11)	
EE	80 (*2)	Intake Manifold
	104 (*11)	
EF	82 (*3)	Rear Part of Cylinder Block
	106 (*12)	
EH	84 (*4)	
	108 (*13)	
EI	86 (*5)	
	110 (*14)	
EV	78 (*1)	Rear Side of Left Bank Cylinder Block
	102 (*10)	
IL	88 (LHD)	Near the Right Side of Steering Column
	112 (RHD)	Instrument Panel Brace RH

* 1 : LHD 1GR-FE * 2 : LHD 3RZ-FE * 3 : LHD 1KD-FTV * 4 : LHD 1KZ-TE * 5 : LHD 5L-E * 6 : LHD 5-Door * 7 : LHD 3-Door
* 8 : LHD 8Way Power Seat * 9 : LHD Except 8Way Power Seat * 10 : RHD 1GR-FE * 11 : RHD 3RZ-FE * 12 : RHD 1KD-FTV
* 13 : RHD 1KZ-TE * 14 : RHD 5L-E * 15 : RHD 5-Door * 16 : RHD 3-Door * 17 : RHD 8Way Power Seat
* 18 : RHD Except 8Way Power Seat

Rear Fog Light

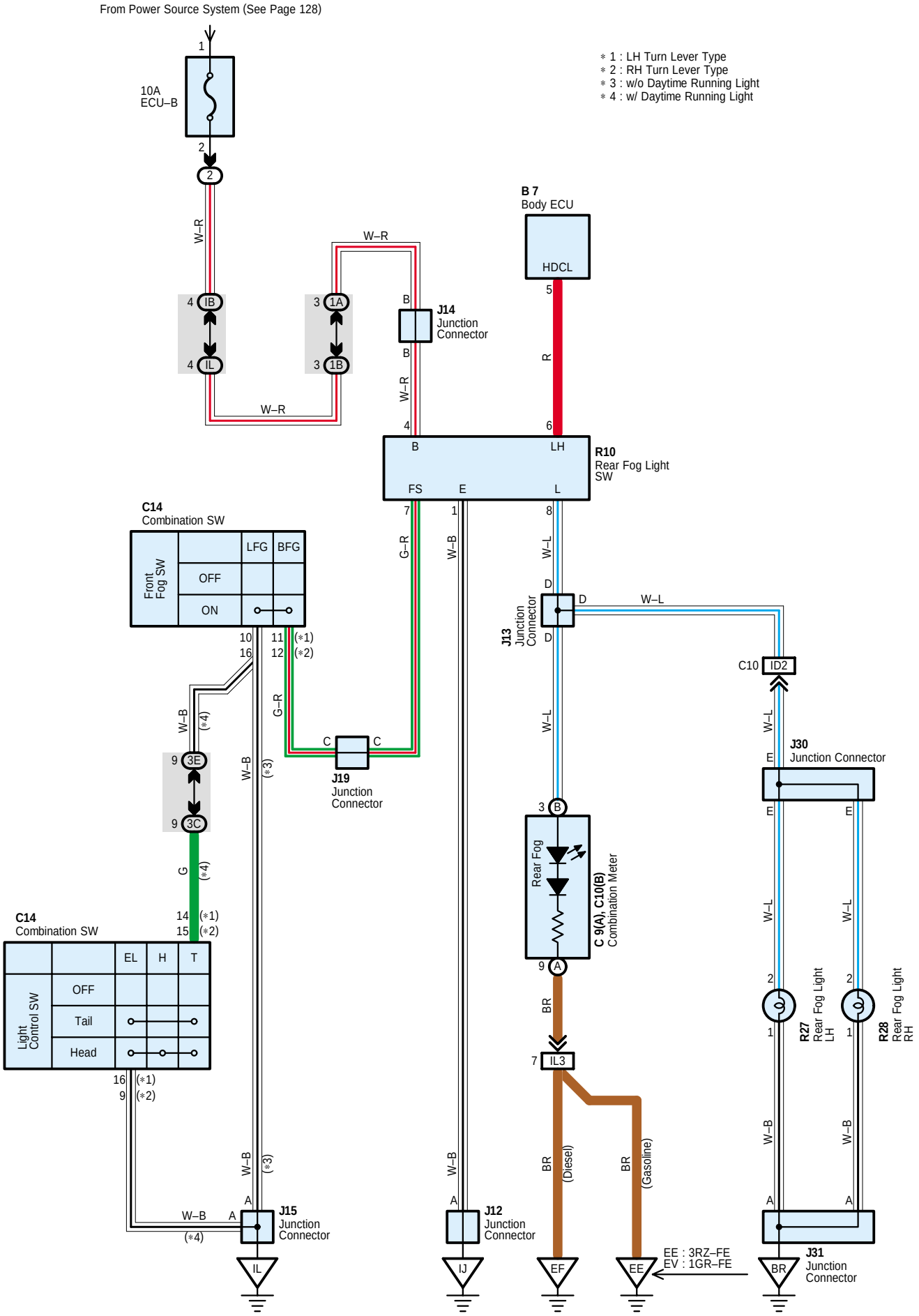

Service Hints

R10 Rear Fog Light SW

4–Ground : Always approx. 12 volts
1–Ground : Always continuity

: Parts Location

Code		See Page	Code	See Page	Code	See Page
B7		48 (LHD)	J14	50 (LHD)	J31	72 (*15)
		68 (RHD)		70 (RHD)		74 (*16)
C9	A	49 (LHD)	J15	50 (LHD)	R10	51 (LHD)
		69 (RHD)		70 (RHD)		71 (RHD)
C10	B	49 (LHD)	J19	50 (LHD)	R27	53 (*6)
		69 (RHD)		70 (RHD)		55 (*7)
C14		49 (LHD)	J30	52 (*6)		73 (*15)
		69 (RHD)		54 (*7)		75 (*16)
J12		50 (LHD)		72 (*15)	R28	53 (*6)
		70 (RHD)		74 (*16)		55 (*7)
J13		50 (LHD)	J31	52 (*6)		73 (*15)
		70 (RHD)		54 (*7)		75 (*16)

: Relay Blocks

Code	See Page	Relay Blocks (Relay Block Location)
2	23	Engine Room R/B (Engine Compartment Left)

: Junction Block and Wire Harness Connector

Code	See Page	Junction Block and Wire Harness (Connector Location)
IB	26 (LHD)	Engine Room Main Wire and Driver Side J/B (Lower Finish Panel)
	28 (RHD)	
IL	27 (LHD)	Instrument Panel Wire and Driver Side J/B (Lower Finish Panel)
	29 (RHD)	
1A	32 (LHD)	Instrument Panel Wire and J/B No.1 (Instrument Panel Reinforcement Left)
	32 (RHD)	Instrument Panel Wire and J/B No.1 (Instrument Panel Reinforcement Right)
1B	32 (LHD)	Instrument Panel Wire and J/B No.1 (Instrument Panel Reinforcement Left)
	32 (RHD)	Instrument Panel Wire and J/B No.1 (Instrument Panel Reinforcement Right)
3C	36 (LHD)	Instrument Panel Wire and J/B No.3 (Instrument Panel Reinforcement Right)
	36 (RHD)	Instrument Panel Wire and J/B No.3 (Instrument Panel Reinforcement Left)
3E	36 (LHD)	Instrument Panel Wire and J/B No.3 (Instrument Panel Reinforcement Right)
	36 (RHD)	Instrument Panel Wire and J/B No.3 (Instrument Panel Reinforcement Left)

: Connector Joining Wire Harness and Wire Harness

Code	See Page	Joining Wire Harness and Wire Harness (Connector Location)
ID2	90 (LHD)	Instrument Panel Wire and Floor No.2 Wire (Left Kick Panel)
	114 (RHD)	
IL3	92 (LHD)	Engine Wire and Instrument Panel Wire (Right Side of the Blower Unit)
	116 (RHD)	Engine Wire and Instrument Panel Wire (Left Side of the Blower Unit)

* 1 : LHD 1GR–FE * 2 : LHD 3RZ–FE * 3 : LHD 1KD–FTV * 4 : LHD 1KZ–TE * 5 : LHD 5L–E * 6 : LHD 5–Door * 7 : LHD 3–Door
* 8 : LHD 8Way Power Seat * 9 : LHD Except 8Way Power Seat * 10 : RHD 1GR–FE * 11 : RHD 3RZ–FE * 12 : RHD 1KD–FTV
* 13 : RHD 1KZ–TE * 14 : RHD 5L–E * 15 : RHD 5–Door * 16 : RHD 3–Door * 17 : RHD 8Way Power Seat
* 18 : RHD Except 8Way Power Seat

▽ : **Ground Points**

Code	See Page	Ground Points Location
EE	80 (*2)	Intake Manifold
	104 (*11)	
EF	82 (*3)	Rear Part of Cylinder Block
	106 (*12)	
EV	78 (*1)	Rear Side of Left Bank Cylinder Block
	102 (*10)	
IJ	88 (LHD)	Left Kick Panel
	112 (RHD)	Right Kick Panel
IL	88 (LHD)	Near the Right Side of Steering Column
	112 (RHD)	Instrument Panel Brace RH
BR	96 (*6)	Left Quarter Panel Inner
	100 (*7)	
	120 (*15)	
	124 (*16)	

* 1 : LHD 1GR-FE * 2 : LHD 3RZ-FE * 3 : LHD 1KD-FTV * 4 : LHD 1KZ-TE * 5 : LHD 5L-E * 6 : LHD 5-Door * 7 : LHD 3-Door
* 8 : LHD 8Way Power Seat * 9 : LHD Except 8Way Power Seat * 10 : RHD 1GR-FE * 11 : RHD 3RZ-FE * 12 : RHD 1KD-FTV
* 13 : RHD 1KZ-TE * 14 : RHD 5L-E * 15 : RHD 5-Door * 16 : RHD 3-Door * 17 : RHD 8Way Power Seat
* 18 : RHD Except 8Way Power Seat

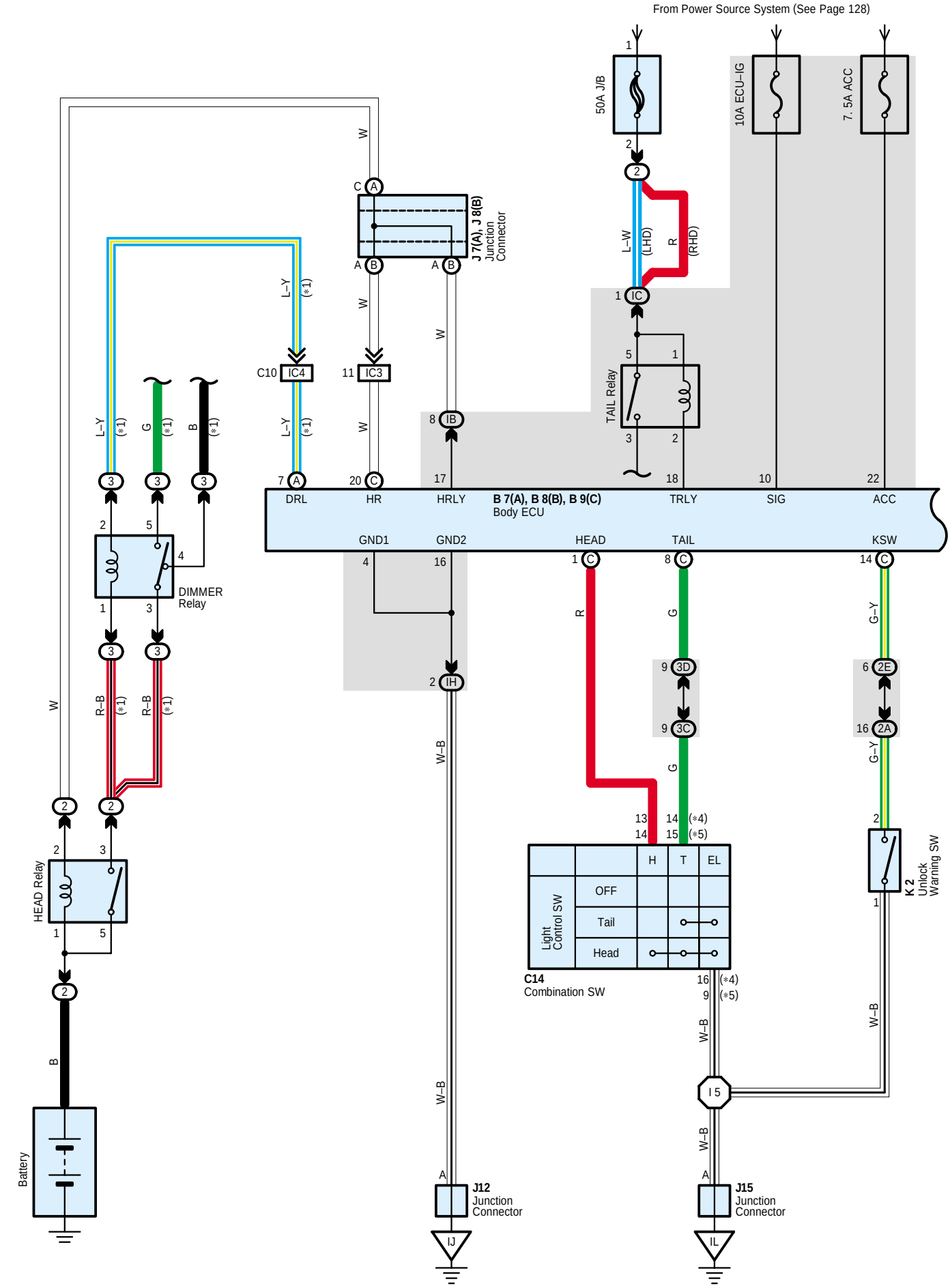
From Power Source System (See Page 128)
50A J/B
10A ECU–IG
7. 5A ACC
J 7(A), J 8(B)
Junction
Connector
L–W
(LHD)
R
(RHD)
TAIL Relay
C10 IC4
11 IC3
8 IB
1 IC
DIMMER
Relay
HEAD Relay
Battery
B 7(A), B 8(B), B 9(C)
Body ECU
DRL
HR
HRLY
TRLY
SIG
ACC
GND1
GND2
HEAD
TAIL
KSW
2 IH
3D
3C
6 2E
16 2A
K 2
Unlock
Warning SW
C14
Combination SW
Light
Control SW
OFF
Tail
Head
H
T
EL
I 5
J12
Junction
Connector
J15
Junction
Connector
IJ
IL

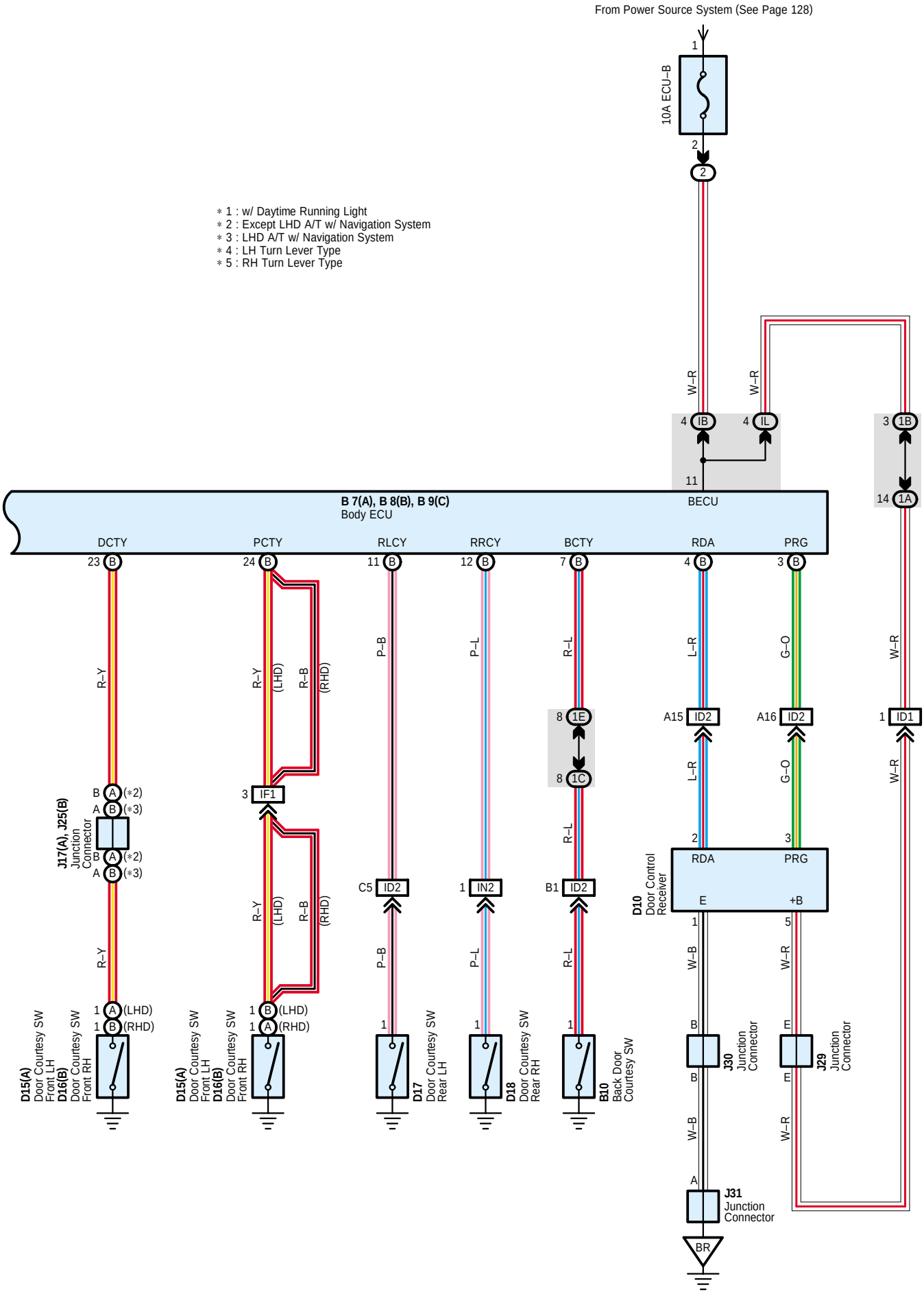
From Power Source System (See Page 128)
10A ECU-B
* 1 : w/ Daytime Running Light
* 2 : Except LHD A/T w/ Navigation System
* 3 : LHD A/T w/ Navigation System
* 4 : LH Turn Lever Type
* 5 : RH Turn Lever Type
W-R
IB
IL
1B
BECU
1A
B 7(A), B 8(B), B 9(C)
Body ECU
DCTY
PCTY
RLCY
RRCY
BCTY
RDA
PRG
R-Y
(LHD)
R-B
(RHD)
P-B
P-L
R-L
L-R
G-O
IF1
ID2
IN2
ID1
1E
1C
J17(A), J25(B)
Junction Connector
(*2)
(*3)
(LHD)
(RHD)
D15(A)
Door Courtesy SW
Front LH
D16(B)
Door Courtesy SW
Front RH
D17
Door Courtesy SW
Rear LH
D18
Door Courtesy SW
Rear RH
B10
Back Door
Courtesy SW
D10
Door Control
Receiver
E
+B
W-B
J30
Junction
Connector
J29
Junction
Connector
J31
Junction
Connector
BR

Light Auto Turn Off

System Outline

With light on and ignition SW turned off, when the driver's door is opened, the body ECU operates and the current is cut off which flows from TERMINAL 18 of the body ECU to TERMINAL (C) 8 in taillight circuit and from TERMINAL 17 to TERMINAL (C) 1 in headlight circuit.
As a result, all lights are turned off automatically.

Service Hints

TAIL Relay
5–3 : Closed with the light control SW at HEAD or TAIL position

HEAD Relay
5–3 : Closed with the light control SW at HEAD position or dimmer SW at FLASH position

Body ECU
10–Ground : Approx. 12 volts with ignition SW at ON or ST position
4, 16–Ground : Always continuity
11–Ground : Always approx. 12 volts

D15 (A), D16 (B) Door Courtesy SW Front LH, RH
1–Ground : Closed with the driver door open

○ : Parts Location

Code		See Page	Code		See Page	Code		See Page
B7	A	48 (LHD)	D15	A	72 (*15)	J17	A	50 (LHD)
		68 (RHD)			74 (*16)			70 (RHD)
B8	B	48 (LHD)	D16	B	52 (*6)	J25	B	50 (LHD)
		68 (RHD)			54 (*7)			70 (RHD)
B9	C	48 (LHD)			72 (*15)	J29		52 (*6)
		68 (RHD)			74 (*16)			54 (*7)
B10		52 (*6)	D17		52 (*6)			72 (*15)
		54 (*7)			72 (*15)			74 (*16)
		72 (*15)	D18		52 (*6)	J30		52 (*6)
		74 (*16)			72 (*15)			54 (*7)
C14		49 (LHD)	J7	A	50 (LHD)			72 (*15)
		69 (RHD)			70 (RHD)			74 (*16)
D10		52 (*6)	J8	B	50 (LHD)	J31		52 (*6)
		54 (*7)			70 (RHD)			54 (*7)
		72 (*15)	J12		50 (LHD)			72 (*15)
		74 (*16)			70 (RHD)			74 (*16)
D15	A	52 (*6)	J15		50 (LHD)	K2		50 (LHD)
		54 (*7)			70 (RHD)			70 (RHD)

▭ : Relay Blocks

Code	See Page	Relay Blocks (Relay Block Location)
2	23	Engine Room R/B (Engine Compartment Left)
3	24	Engine Room R/B No.3 (Engine Compartment Left)

* 1 : LHD 1GR–FE * 2 : LHD 3RZ–FE * 3 : LHD 1KD–FTV * 4 : LHD 1KZ–TE * 5 : LHD 5L–E * 6 : LHD 5–Door * 7 : LHD 3–Door
* 8 : LHD 8Way Power Seat * 9 : LHD Except 8Way Power Seat * 10 : RHD 1GR–FE * 11 : RHD 3RZ–FE * 12 : RHD 1KD–FTV
* 13 : RHD 1KZ–TE * 14 : RHD 5L–E * 15 : RHD 5–Door * 16 : RHD 3–Door * 17 : RHD 8Way Power Seat
* 18 : RHD Except 8Way Power Seat

: **Junction Block and Wire Harness Connector**

Code	See Page	Junction Block and Wire Harness (Connector Location)
IB	26 (LHD)	Engine Room Main Wire and Driver Side J/B (Lower Finish Panel)
	28 (RHD)	
IC	26 (LHD)	
	28 (RHD)	
IH	27 (LHD)	Instrument Panel Wire and Driver Side J/B (Lower Finish Panel)
	29 (RHD)	
IL	27 (LHD)	
	29 (RHD)	
1A	32 (LHD)	Instrument Panel Wire and J/B No.1 (Instrument Panel Reinforcement Left)
	32 (RHD)	Instrument Panel Wire and J/B No.1 (Instrument Panel Reinforcement Right)
1B	32 (LHD)	Instrument Panel Wire and J/B No.1 (Instrument Panel Reinforcement Left)
	32 (RHD)	Instrument Panel Wire and J/B No.1 (Instrument Panel Reinforcement Right)
1C	32 (LHD)	Instrument Panel Wire and J/B No.1 (Instrument Panel Reinforcement Left)
	32 (RHD)	Instrument Panel Wire and J/B No.1 (Instrument Panel Reinforcement Right)
1E	32 (LHD)	Instrument Panel Wire and J/B No.1 (Instrument Panel Reinforcement Left)
	32 (RHD)	Instrument Panel Wire and J/B No.1 (Instrument Panel Reinforcement Right)
2A	34	Instrument Panel Wire and J/B No.2 (Instrument Panel Reinforcement Center)
2E		
3C	36 (LHD)	Instrument Panel Wire and J/B No.3 (Instrument Panel Reinforcement Right)
	36 (RHD)	Instrument Panel Wire and J/B No.3 (Instrument Panel Reinforcement Left)
3D	36 (LHD)	Instrument Panel Wire and J/B No.3 (Instrument Panel Reinforcement Right)
	36 (RHD)	Instrument Panel Wire and J/B No.3 (Instrument Panel Reinforcement Left)

: **Connector Joining Wire Harness and Wire Harness**

Code	See Page	Joining Wire Harness and Wire Harness (Connector Location)
IC3	88 (LHD)	Instrument Panel Wire and Engine Room Main Wire (Left Kick Panel)
	112 (RHD)	
IC4	88 (LHD)	
	112 (RHD)	
ID1	90 (LHD)	Instrument Panel Wire and Floor No.2 Wire (Left Kick Panel)
	114 (RHD)	
ID2	90 (LHD)	
	114 (RHD)	
IF1	90 (LHD)	Instrument Panel Wire and Instrument Panel Wire (Near the J/B No.1)
	114 (RHD)	
IN2	94 (LHD)	Instrument Panel Wire and Floor Wire (Right Kick Panel)
	118 (RHD)	

: **Ground Points**

Code	See Page	Ground Points Location
IJ	88 (LHD)	Left Kick Panel
	112 (RHD)	Right Kick Panel
IL	88 (LHD)	Near the Right Side of Steering Column
	112 (RHD)	Instrument Panel Brace RH
BR	96 (*6)	Left Quarter Panel Inner
	100 (*7)	
	120 (*15)	
	124 (*16)	

* 1 : LHD 1GR-FE * 2 : LHD 3RZ-FE * 3 : LHD 1KD-FTV * 4 : LHD 1KZ-TE * 5 : LHD 5L-E * 6 : LHD 5-Door * 7 : LHD 3-Door
* 8 : LHD 8Way Power Seat * 9 : LHD Except 8Way Power Seat * 10 : RHD 1GR-FE * 11 : RHD 3RZ-FE * 12 : RHD 1KD-FTV
* 13 : RHD 1KZ-TE * 14 : RHD 5L-E * 15 : RHD 5-Door * 16 : RHD 3-Door * 17 : RHD 8Way Power Seat
* 18 : RHD Except 8Way Power Seat

: **Splice Points**

Code	See Page	Wire Harness with Splice Points	Code	See Page	Wire Harness with Splice Points
I5	90 (LHD)	Instrument Panel Wire	I5	114 (RHD)	Instrument Panel Wire

Turn Signal and Hazard Warning Light

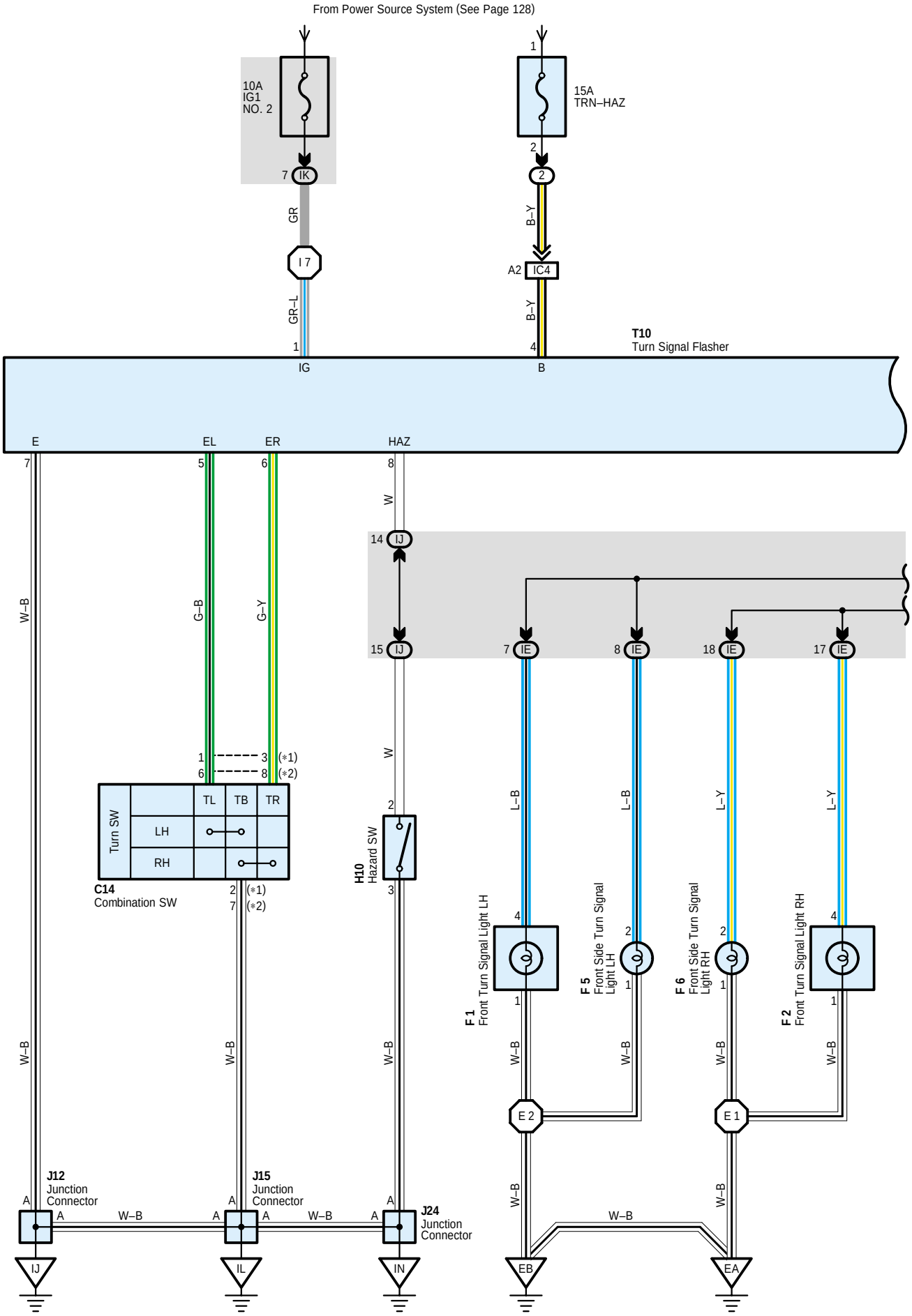

∗1 : LH Turn Lever Type
∗2 : RH Turn Lever Type
∗3 : Except Built–In Type
∗4 : Built–In Type
∗5 : 3RZ–FE Unleaded Gasoline
∗6 : 3RZ–FE Leaded Gasoline
∗7 : 1GR–FE

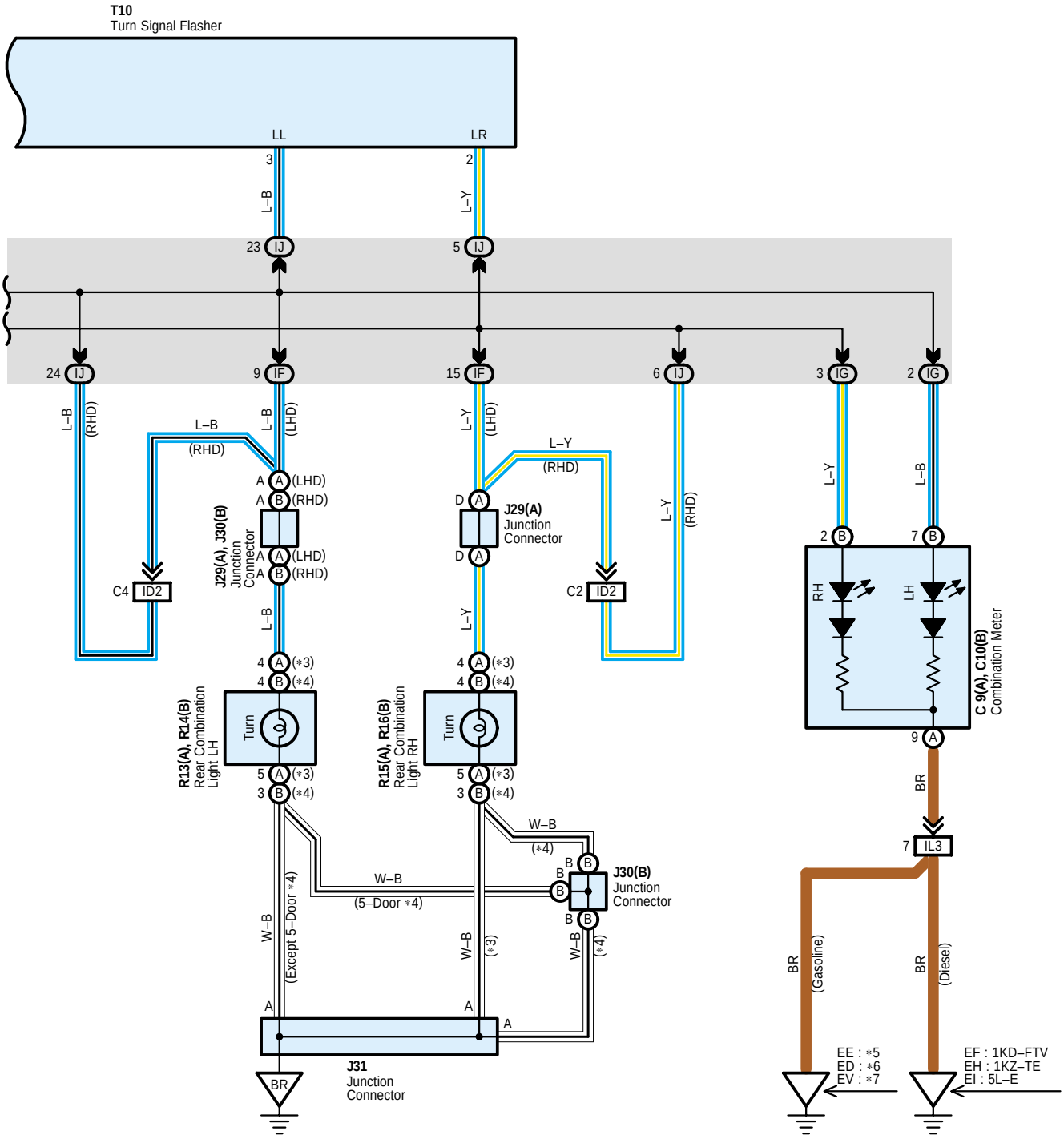

Service Hints

T10 Turn Signal Flasher

1–Ground : Approx. 12 volts with the ignition SW at ON position
7–Ground : Always continuity
4–Ground : Always approx. 12 volts

: Parts Location

Code		See Page	Code	See Page	Code		See Page
C9	A	49 (LHD)	F5	40 (*2)	J29	A	52 (*6)
		69 (RHD)		42 (*3)			54 (*7)
C10	B	49 (LHD)		44 (*4)			72 (*15)
		69 (RHD)		46 (*5)			74 (*16)
C14		49 (LHD)		58 (*10)	J30	B	52 (*6)
		69 (RHD)		60 (*11)			54 (*7)
F1		38 (*1)		62 (*12)			72 (*15)
		40 (*2)		64 (*13)			74 (*16)
		42 (*3)		66 (*14)	J31		52 (*6)
		44 (*4)	F6	38 (*1)			54 (*7)
		46 (*5)		40 (*2)			72 (*15)
		58 (*10)		42 (*3)			74 (*16)
		60 (*11)		44 (*4)	R13	A	53 (*6)
		62 (*12)		46 (*5)			55 (*7)
		64 (*13)		58 (*10)			73 (*15)
		66 (*14)		60 (*11)			75 (*16)
F2		38 (*1)		62 (*12)	R14	B	73 (*15)
		40 (*2)		64 (*13)			75 (*16)
		42 (*3)		66 (*14)	R15	A	53 (*6)
		44 (*4)	H10	50 (LHD)			55 (*7)
		46 (*5)		70 (RHD)			73 (*15)
		58 (*10)	J12	50 (LHD)			75 (*16)
		60 (*11)		70 (RHD)	R16	B	73 (*15)
		62 (*12)	J15	50 (LHD)			75 (*16)
		64 (*13)		70 (RHD)	T10		51 (LHD)
		66 (*14)	J24	50 (LHD)			71 (RHD)
F5		38 (*1)		70 (RHD)			

: Relay Blocks

Code	See Page	Relay Blocks (Relay Block Location)
2	23	Engine Room R/B (Engine Compartment Left)

* 1 : LHD 1GR–FE * 2 : LHD 3RZ–FE * 3 : LHD 1KD–FTV * 4 : LHD 1KZ–TE * 5 : LHD 5L–E * 6 : LHD 5–Door * 7 : LHD 3–Door
* 8 : LHD 8Way Power Seat * 9 : LHD Except 8Way Power Seat * 10 : RHD 1GR–FE * 11 : RHD 3RZ–FE * 12 : RHD 1KD–FTV
* 13 : RHD 1KZ–TE * 14 : RHD 5L–E * 15 : RHD 5–Door * 16 : RHD 3–Door * 17 : RHD 8Way Power Seat
* 18 : RHD Except 8Way Power Seat

: **Junction Block and Wire Harness Connector**

Code	See Page	Junction Block and Wire Harness (Connector Location)
IE	26 (LHD)	Engine Room Main Wire and Driver Side J/B (Lower Finish Panel)
	28 (RHD)	
IF	26 (LHD)	Floor No.2 Wire and Driver Side J/B (Lower Finish Panel)
	28 (RHD)	Floor Wire and Driver Side J/B (Lower Finish Panel)
IG	27 (LHD)	Instrument Panel Wire and Driver Side J/B (Lower Finish Panel)
	29 (RHD)	
IJ	27 (LHD)	
	29 (RHD)	
IK	27 (LHD)	
	29 (RHD)	

: **Connector Joining Wire Harness and Wire Harness**

Code	See Page	Joining Wire Harness and Wire Harness (Connector Location)
IC4	88 (LHD)	Instrument Panel Wire and Engine Room Main Wire (Left Kick Panel)
	112 (RHD)	
ID2	114 (RHD)	Instrument Panel Wire and Floor No.2 Wire (Left Kick Panel)
IL3	92 (LHD)	Engine Wire and Instrument Panel Wire (Right Side of the Blower Unit)
	116 (RHD)	Engine Wire and Instrument Panel Wire (Left Side of the Blower Unit)

▽ : **Ground Points**

Code	See Page	Ground Points Location
EA	78 (*1)	Front Right Fender
	80 (*2)	
	82 (*3)	
	84 (*4)	
	86 (*5)	
	102 (*10)	
	104 (*11)	
	106 (*12)	
	108 (*13)	
	110 (*14)	
EB	78 (*1)	Front Left Fender
	80 (*2)	
	82 (*3)	
	84 (*4)	
	86 (*5)	
	102 (*10)	
	104 (*11)	
	106 (*12)	
	108 (*13)	
	110 (*14)	
ED	80 (*2)	Ignition Coil Bracket
	104 (*11)	
EE	80 (*2)	Intake Manifold
	104 (*11)	
EF	82 (*3)	Rear Part of Cylinder Block
	106 (*12)	
EH	84 (*4)	
	108 (*13)	
EI	86 (*5)	
	110 (*14)	
EV	78 (*1)	Rear Side of Left Bank Cylinder Block
	102 (*10)	
IJ	88 (LHD)	Left Kick Panel
	112 (RHD)	Right Kick Panel
IL	88 (LHD)	Near the Right Side of Steering Column
	112 (RHD)	Instrument Panel Brace RH
IN	88 (LHD)	Right Kick Panel
	112 (RHD)	Left Kick Panel
BR	96 (*6)	Left Quarter Panel Inner
	100 (*7)	
	120 (*15)	
	124 (*16)	

* 1 : LHD 1GR-FE * 2 : LHD 3RZ-FE * 3 : LHD 1KD-FTV * 4 : LHD 1KZ-TE * 5 : LHD 5L-E * 6 : LHD 5-Door * 7 : LHD 3-Door
* 8 : LHD 8Way Power Seat * 9 : LHD Except 8Way Power Seat * 10 : RHD 1GR-FE * 11 : RHD 3RZ-FE * 12 : RHD 1KD-FTV
* 13 : RHD 1KZ-TE * 14 : RHD 5L-E * 15 : RHD 5-Door * 16 : RHD 3-Door * 17 : RHD 8Way Power Seat
* 18 : RHD Except 8Way Power Seat

: **Splice Points**

Code	See Page	Wire Harness with Splice Points	Code	See Page	Wire Harness with Splice Points
E1	78 (*1)	Engine Room Main Wire	E2	80 (*2)	Engine Room Main Wire
	80 (*2)			82 (*3)	
	82 (*3)			84 (*4)	
	84 (*4)			86 (*5)	
	86 (*5)			102 (*10)	
	102 (*10)			104 (*11)	
	104 (*11)			106 (*12)	
	106 (*12)			108 (*13)	
	108 (*13)			110 (*14)	
	110 (*14)		I7	90 (LHD)	Instrument Panel Wire
E2	78 (*1)			114 (RHD)	

* 1 : LHD 1GR-FE * 2 : LHD 3RZ-FE * 3 : LHD 1KD-FTV * 4 : LHD 1KZ-TE * 5 : LHD 5L-E * 6 : LHD 5-Door * 7 : LHD 3-Door
* 8 : LHD 8Way Power Seat * 9 : LHD Except 8Way Power Seat * 10 : RHD 1GR-FE * 11 : RHD 3RZ-FE * 12 : RHD 1KD-FTV
* 13 : RHD 1KZ-TE * 14 : RHD 5L-E * 15 : RHD 5-Door * 16 : RHD 3-Door * 17 : RHD 8Way Power Seat
* 18 : RHD Except 8Way Power Seat

Interior Light

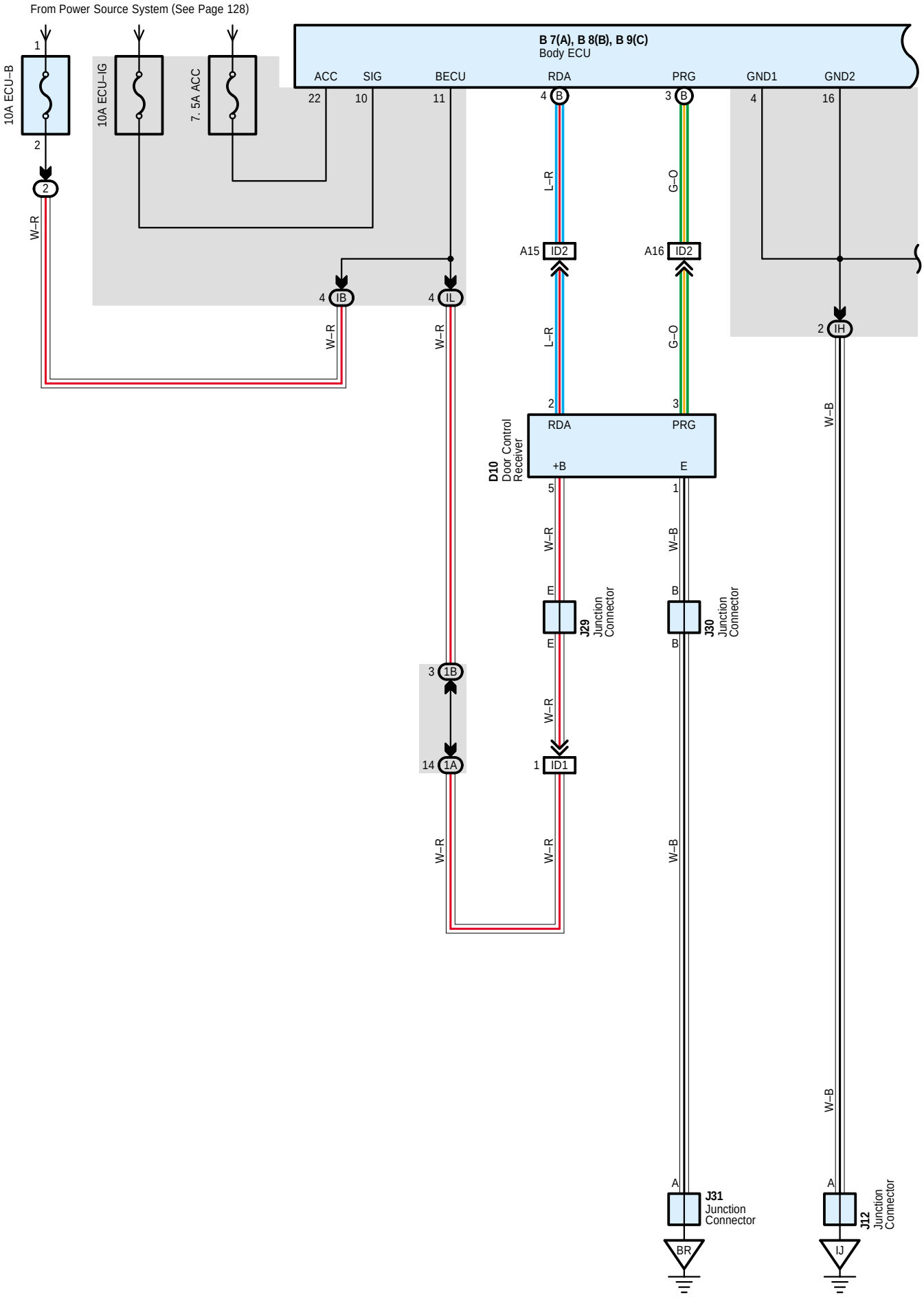

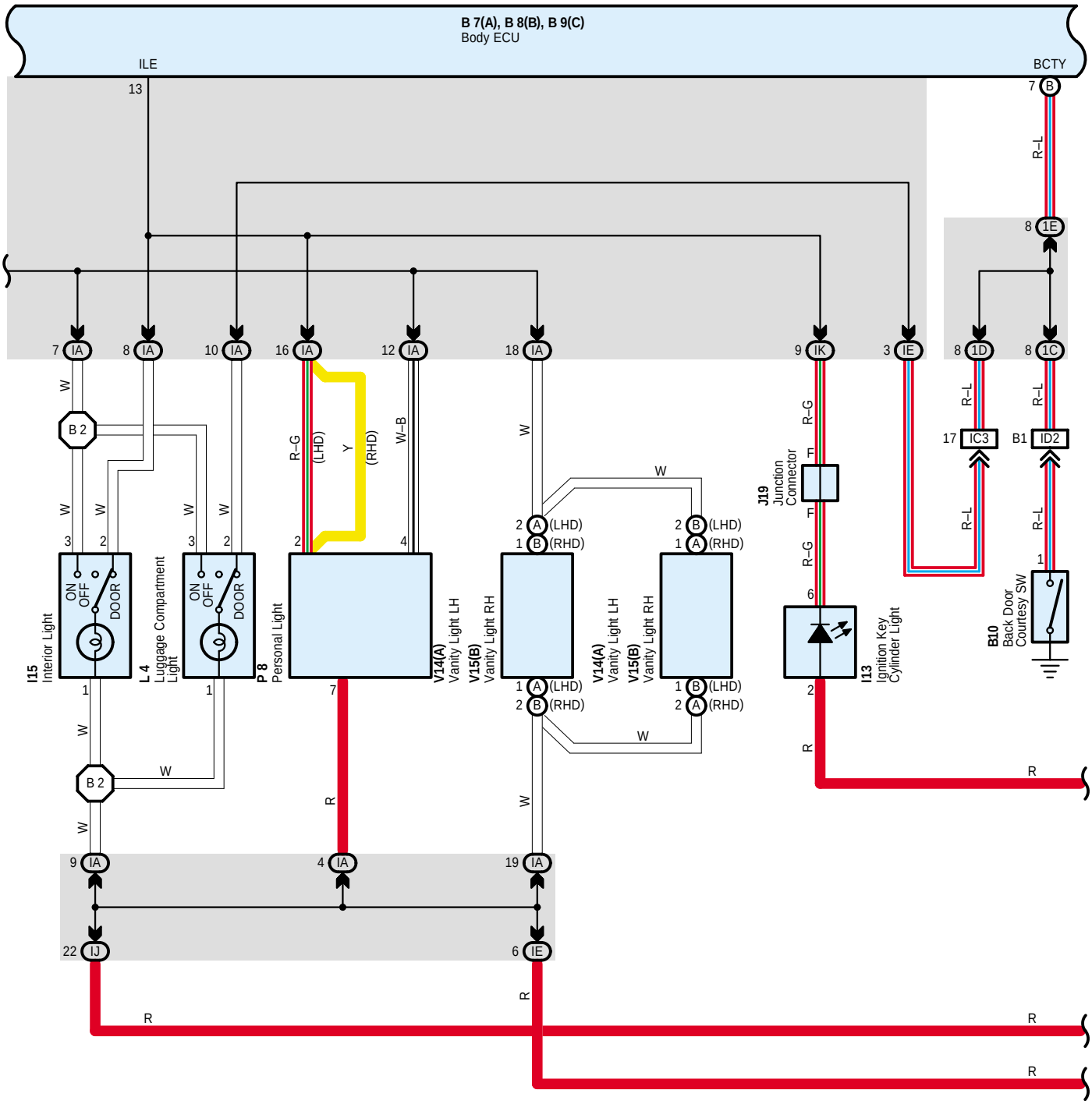
B 7(A), B 8(B), B 9(C)
Body ECU
ILE
BCTY
I15
Interior Light
L 4
Luggage Compartment Light
P 8
Personal Light
V14(A)
Vanity Light LH
V15(B)
Vanity Light RH
J19
Junction Connector
I13
Ignition Key Cylinder Light
B10
Back Door Courtesy SW
IC3
ID2
ON
OFF
DOOR
(LHD)
(RHD)

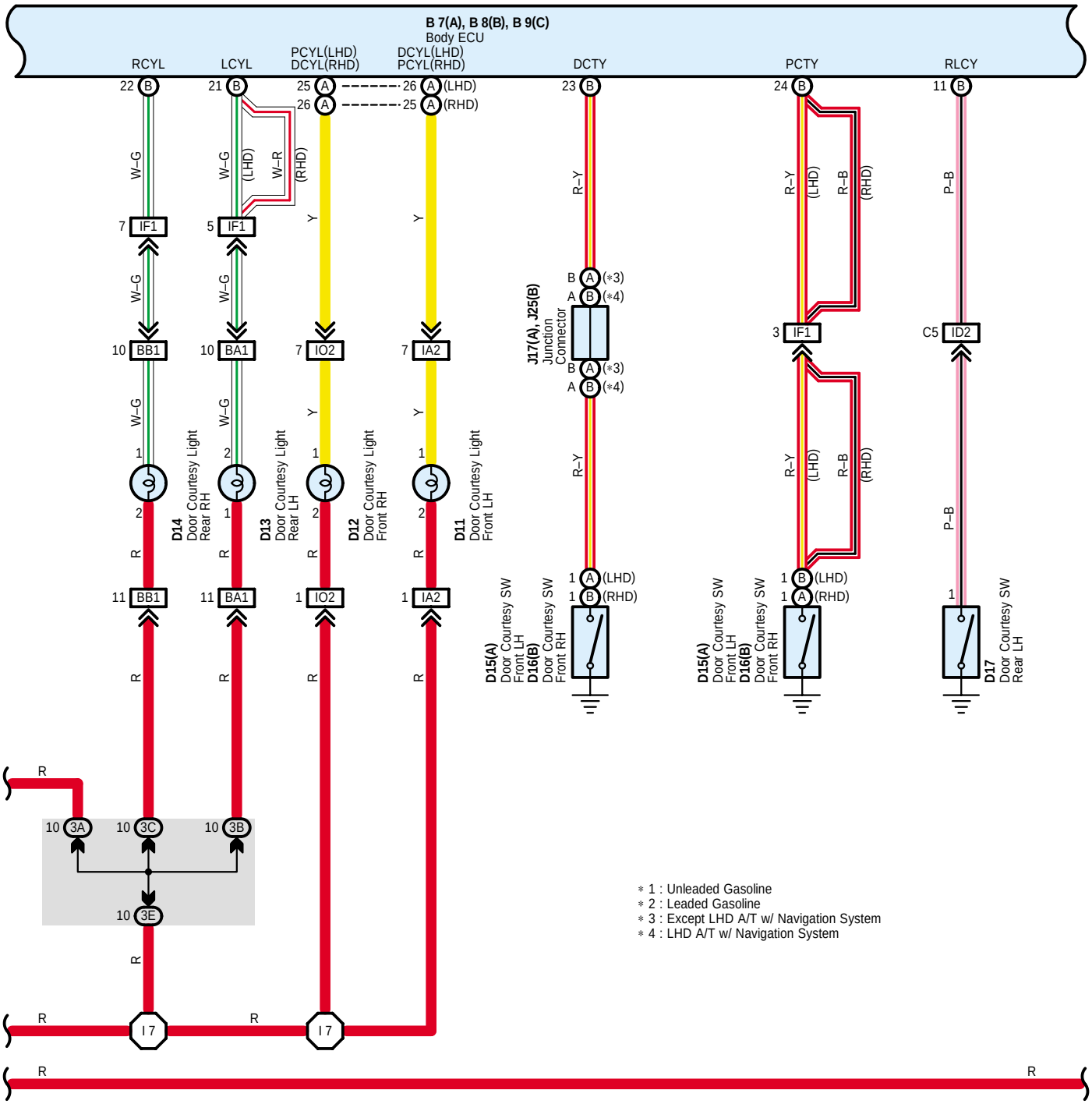
B 7(A), B 8(B), B 9(C)
Body ECU
RCYL
LCYL
PCYL(LHD)
DCYL(RHD)
DCYL(LHD)
PCYL(RHD)
DCTY
PCTY
RLCY
22 B
21 B
25 A
26 A (LHD)
26 A
25 A (RHD)
23 B
24 B
11 B
W–G
(LHD)
W–R
(RHD)
Y
R–Y
R–B
P–B
7 IF1
5 IF1
3 IF1
C5 ID2
10 BB1
10 BA1
7 IO2
7 IA2
J17(A), J25(B)
Junction
Connector
B A (*3)
A B (*4)
D14
Door Courtesy Light
Rear RH
D13
Door Courtesy Light
Rear LH
D12
Door Courtesy Light
Front RH
D11
Door Courtesy Light
Front LH
R
11 BB1
11 BA1
1 IO2
1 IA2
D15(A)
Door Courtesy SW
Front LH
D16(B)
Door Courtesy SW
Front RH
1 A (LHD)
1 B (RHD)
1 B (LHD)
1 A (RHD)
D17
Door Courtesy SW
Rear LH
10 3A
10 3C
10 3B
10 3E
I 7
* 1 : Unleaded Gasoline
* 2 : Leaded Gasoline
* 3 : Except LHD A/T w/ Navigation System
* 4 : LHD A/T w/ Navigation System

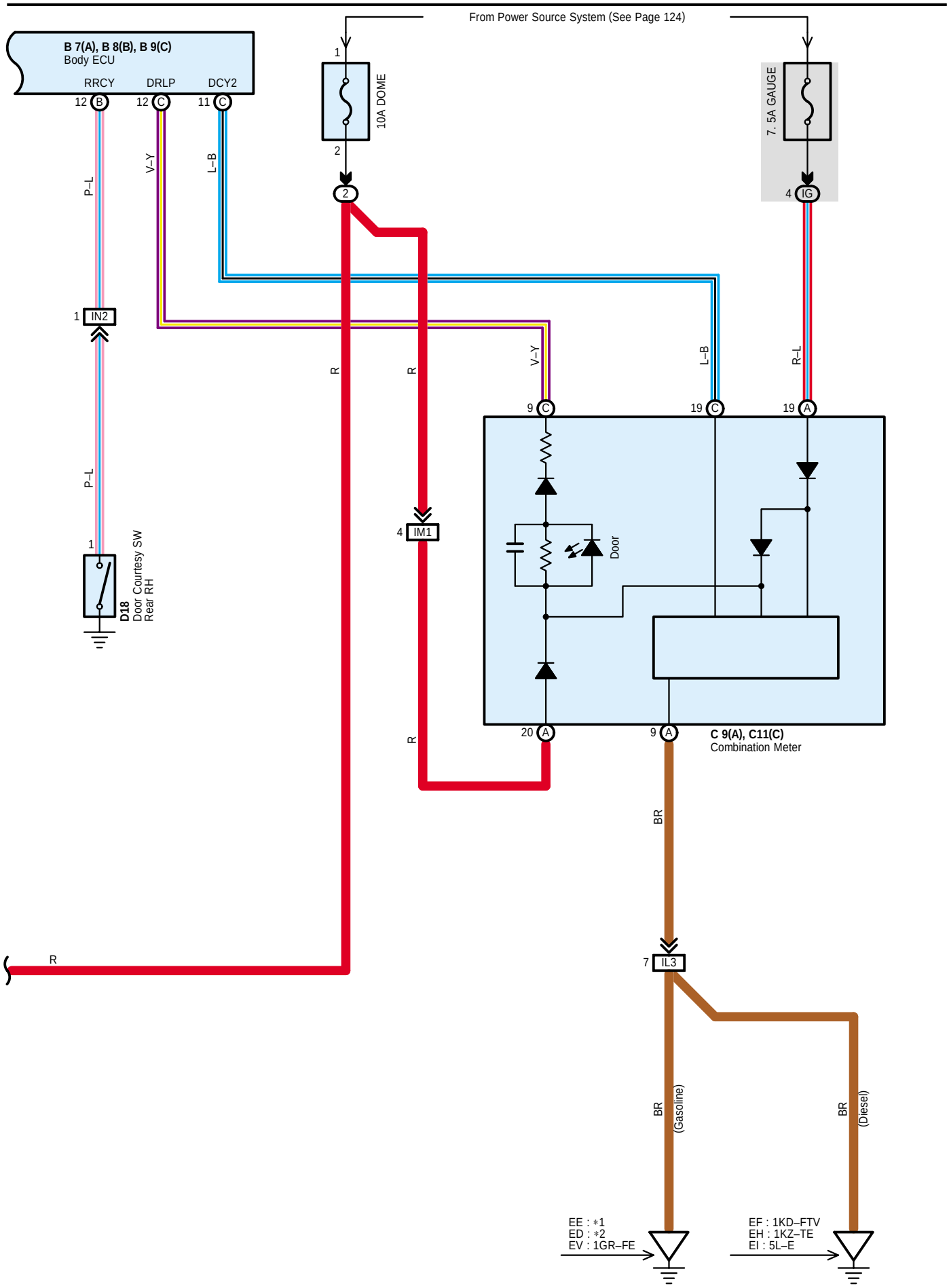
From Power Source System (See Page 124)
B 7(A), B 8(B), B 9(C)
Body ECU
RRCY
DRLP
DCY2
12 B
12 C
11 C
10A DOME
7. 5A GAUGE
4 IG
P–L
V–Y
L–B
R
R–L
1 IN2
4 IM1
9 C
19 C
19 A
20 A
9 A
Door
D18
Door Courtesy SW
Rear RH
C 9(A), C11(C)
Combination Meter
BR
7 IL3
BR (Gasoline)
BR (Diesel)
EE : *1
ED : *2
EV : 1GR–FE
EF : 1KD–FTV
EH : 1KZ–TE
EI : 5L–E

Interior Light

System Outline

The interior light is controlled by the body ECU. This system has following features.

1. Normal Operation

* When one of the doors opened, the front interior light and open door warning light is turned on. When the all doors are closed, the front interior light and open warning light is turned off.
* When the back door opened, the rear interior light and open door warning light is turned on. When the back door is closed, the rear interior light and open warning light is turned off.

2. Illuminated Entry System

* When a door is unlocked through a key operation or transmitter operation, or if a door is opened or closed, the illuminated entry system turns ON the interior light and the ignition key illumination.
* If the ignition switch is turned to the ACC or ON position or if all doors are locked during the 15 seconds in which these lights are ON, they will immediately turn OFF.

Service Hints

Body ECU

22–Ground : Approx. 12 volts with ignition SW at ACC or ON position
10–Ground : Approx. 12 volts with ignition SW at ON position
4, 16–Ground : Always continuity
11–Ground : Always approx. 12 volts

○ : **Parts Location**

Code		See Page
B7	A	48 (LHD)
		68 (RHD)
B8	B	48 (LHD)
		68 (RHD)
B9	C	48 (LHD)
		68 (RHD)
B10		52 (*6)
		54 (*7)
		72 (*15)
		74 (*16)
C9	A	49 (LHD)
		69 (RHD)
C11	C	49 (LHD)
		69 (RHD)
D10		52 (*6)
		54 (*7)
		72 (*15)
		74 (*16)
D11		52 (*6)
		54 (*7)
		72 (*15)
		74 (*16)
D12		52 (*6)
		54 (*7)
		72 (*15)
		74 (*16)
D13		52 (*6)
		72 (*15)

Code		See Page
D14		52 (*6)
		72 (*15)
D15	A	52 (*6)
		54 (*7)
		72 (*15)
		74 (*16)
D16	B	52 (*6)
		54 (*7)
		72 (*15)
		74 (*16)
D17		52 (*6)
		72 (*15)
D18		52 (*6)
		72 (*15)
I13		50 (LHD)
		70 (RHD)
I15		52 (*6)
		54 (*7)
		72 (*15)
		74 (*16)
J12		50 (LHD)
		70 (RHD)
J17	A	50 (LHD)
		70 (RHD)
J19		50 (LHD)
		70 (RHD)
J25	B	50 (LHD)
J29		52 (*6)

Code		See Page
J29		54 (*7)
		72 (*15)
		74 (*16)
J30		52 (*6)
		54 (*7)
		72 (*15)
		74 (*16)
J31		52 (*6)
		54 (*7)
		72 (*15)
		74 (*16)
L4		53 (*6)
		55 (*7)
		73 (*15)
		75 (*16)
P8		53 (*6)
		55 (*7)
		73 (*15)
		75 (*16)
V14	A	53 (*6)
		55 (*7)
		73 (*15)
		75 (*16)
V15	B	53 (*6)
		55 (*7)
		73 (*15)
		75 (*16)

* 1 : LHD 1GR–FE * 2 : LHD 3RZ–FE * 3 : LHD 1KD–FTV * 4 : LHD 1KZ–TE * 5 : LHD 5L–E * 6 : LHD 5–Door * 7 : LHD 3–Door
* 8 : LHD 8Way Power Seat * 9 : LHD Except 8Way Power Seat * 10 : RHD 1GR–FE * 11 : RHD 3RZ–FE * 12 : RHD 1KD–FTV
* 13 : RHD 1KZ–TE * 14 : RHD 5L–E * 15 : RHD 5–Door * 16 : RHD 3–Door * 17 : RHD 8Way Power Seat
* 18 : RHD Except 8Way Power Seat

: **Relay Blocks**

Code	See Page	Relay Blocks (Relay Block Location)
2	23	Engine Room R/B (Engine Compartment Left)

: **Junction Block and Wire Harness Connector**

Code	See Page	Junction Block and Wire Harness (Connector Location)
IA	26 (LHD)	Roof Wire and Driver Side J/B (Lower Finish Panel)
	28 (RHD)	
IB	26 (LHD)	Engine Room Main Wire and Driver Side J/B (Lower Finish Panel)
	28 (RHD)	
IE	26 (LHD)	
	28 (RHD)	
IG	27 (LHD)	Instrument Panel Wire and Driver Side J/B (Lower Finish Panel)
	29 (RHD)	
IH	27 (LHD)	
	29 (RHD)	
IJ	27 (LHD)	
	29 (RHD)	
IK	27 (LHD)	
	29 (RHD)	
IL	27 (LHD)	
	29 (RHD)	
1A	32 (LHD)	Instrument Panel Wire and J/B No.1 (Instrument Panel Reinforcement Left)
	32 (RHD)	Instrument Panel Wire and J/B No.1 (Instrument Panel Reinforcement Right)
1B	32 (LHD)	Instrument Panel Wire and J/B No.1 (Instrument Panel Reinforcement Left)
	32 (RHD)	Instrument Panel Wire and J/B No.1 (Instrument Panel Reinforcement Right)
1C	32 (LHD)	Instrument Panel Wire and J/B No.1 (Instrument Panel Reinforcement Left)
	32 (RHD)	Instrument Panel Wire and J/B No.1 (Instrument Panel Reinforcement Right)
1D	32 (LHD)	Instrument Panel Wire and J/B No.1 (Instrument Panel Reinforcement Left)
	32 (RHD)	Instrument Panel Wire and J/B No.1 (Instrument Panel Reinforcement Right)
1E	32 (LHD)	Instrument Panel Wire and J/B No.1 (Instrument Panel Reinforcement Left)
	32 (RHD)	Instrument Panel Wire and J/B No.1 (Instrument Panel Reinforcement Right)
3A	36 (LHD)	Instrument Panel Wire and J/B No.3 (Instrument Panel Reinforcement Right)
	36 (RHD)	Instrument Panel Wire and J/B No.3 (Instrument Panel Reinforcement Left)
3B	36 (LHD)	Instrument Panel Wire and J/B No.3 (Instrument Panel Reinforcement Right)
	36 (RHD)	Instrument Panel Wire and J/B No.3 (Instrument Panel Reinforcement Left)
3C	36 (LHD)	Instrument Panel Wire and J/B No.3 (Instrument Panel Reinforcement Right)
	36 (RHD)	Instrument Panel Wire and J/B No.3 (Instrument Panel Reinforcement Left)
3E	36 (LHD)	Instrument Panel Wire and J/B No.3 (Instrument Panel Reinforcement Right)
	36 (RHD)	Instrument Panel Wire and J/B No.3 (Instrument Panel Reinforcement Left)

: **Connector Joining Wire Harness and Wire Harness**

Code	See Page	Joining Wire Harness and Wire Harness (Connector Location)
IA2	88 (LHD)	Front Door LH Wire and Instrument Panel Wire (Left Kick Panel)
	112 (RHD)	
IC3	88 (LHD)	Instrument Panel Wire and Engine Room Main Wire (Left Kick Panel)
	112 (RHD)	
ID1	90 (LHD)	Instrument Panel Wire and Floor No.2 Wire (Left Kick Panel)
	114 (RHD)	
ID2	90 (LHD)	
	114 (RHD)	
IF1	90 (LHD)	Instrument Panel Wire and Instrument Panel Wire (Near the J/B No.1)
	114 (RHD)	
IL3	92 (LHD)	Engine Wire and Instrument Panel Wire (Right Side of the Blower Unit)
	116 (RHD)	Engine Wire and Instrument Panel Wire (Left Side of the Blower Unit)
IM1	92 (LHD)	Instrument Panel Wire and Engine Room Main Wire (Right Kick Panel)
	116 (RHD)	
IN2	94 (LHD)	Instrument Panel Wire and Floor Wire (Right Kick Panel)
	118 (RHD)	
IO2	94 (LHD)	Front Door RH Wire and Instrument Panel Wire (Right Kick Panel)
	118 (RHD)	
BA1	96 (*6)	Rear Door LH Wire and Instrument Panel Wire (Center Pillar LH)
	120 (*15)	
BB1	96 (*6)	Rear Door RH Wire and Instrument Panel Wire (Center Pillar RH)
	120 (*15)	

: **Ground Points**

Code	See Page	Ground Points Location
ED	80 (*2)	Ignition Coil Bracket
	104 (*11)	
EE	80 (*2)	Intake Manifold
	104 (*11)	
EF	82 (*3)	Rear Part of Cylinder Block
	106 (*12)	
EH	84 (*4)	
	108 (*13)	
EI	86 (*5)	
	110 (*14)	
EV	78 (*1)	Rear Side of Left Bank Cylinder Block
	102 (*10)	
IJ	88 (LHD)	Left Kick Panel
	112 (RHD)	Right Kick Panel
BR	96 (*6)	Left Quarter Panel Inner
	100 (*7)	
	120 (*15)	
	124 (*16)	

: **Splice Points**

Code	See Page	Wire Harness with Splice Points	Code	See Page	Wire Harness with Splice Points
I7	90 (LHD)	Instrument Panel Wire	B2	100 (*7)	Roof Wire
	114 (RHD)			122 (*15)	
B2	98 (*6)	Roof Wire		124 (*16)	

* 1 : LHD 1GR-FE * 2 : LHD 3RZ-FE * 3 : LHD 1KD-FTV * 4 : LHD 1KZ-TE * 5 : LHD 5L-E * 6 : LHD 5-Door * 7 : LHD 3-Door
* 8 : LHD 8Way Power Seat * 9 : LHD Except 8Way Power Seat * 10 : RHD 1GR-FE * 11 : RHD 3RZ-FE * 12 : RHD 1KD-FTV
* 13 : RHD 1KZ-TE * 14 : RHD 5L-E * 15 : RHD 5-Door * 16 : RHD 3-Door * 17 : RHD 8Way Power Seat
* 18 : RHD Except 8Way Power Seat

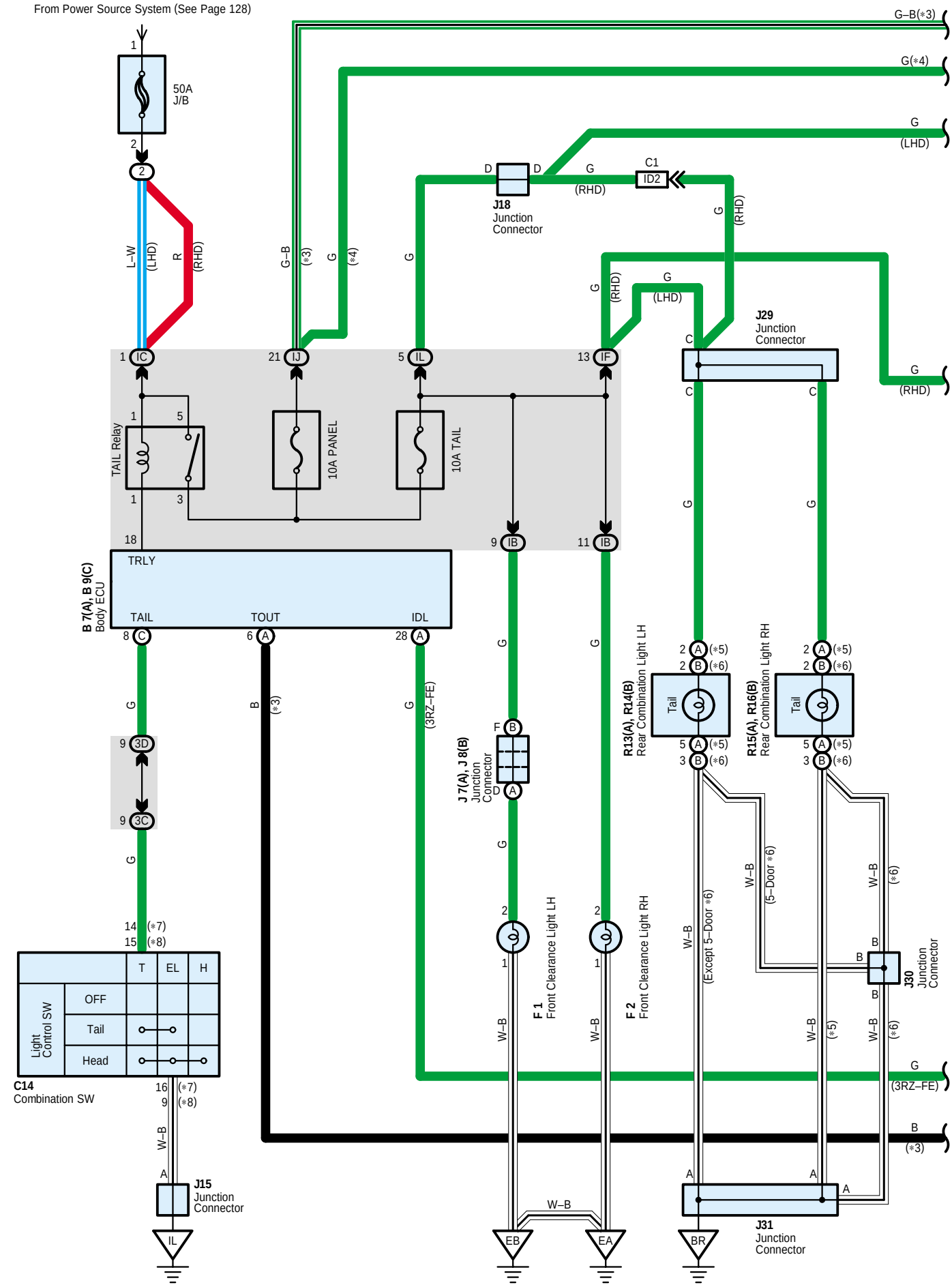
From Power Source System (See Page 128)
50A
J/B
L–W
(LHD)
R
(RHD)
G–B
(*3)
G
(*4)
G
(LHD)
G–B(*3)
G(*4)
J18
Junction
Connector
C1
ID2
(RHD)
J29
Junction
Connector
TAIL Relay
10A PANEL
10A TAIL
TRLY
B 7(A), B 9(C)
Body ECU
TAIL
TOUT
IDL
(3RZ–FE)
J 7(A), J 8(B)
Junction
Connector
R13(A), R14(B)
Rear Combination Light LH
R15(A), R16(B)
Rear Combination Light RH
Tail
(*5)
(*6)
(5–Door *6)
(Except 5–Door *6)
W–B
F 1
Front Clearance Light LH
F 2
Front Clearance Light RH
J30
Junction
Connector
J31
Junction
Connector
J15
Junction
Connector
C14
Combination SW
Light
Control SW
OFF
Tail
Head
T
EL
H
(*7)
(*8)
EB
EA
BR
IL

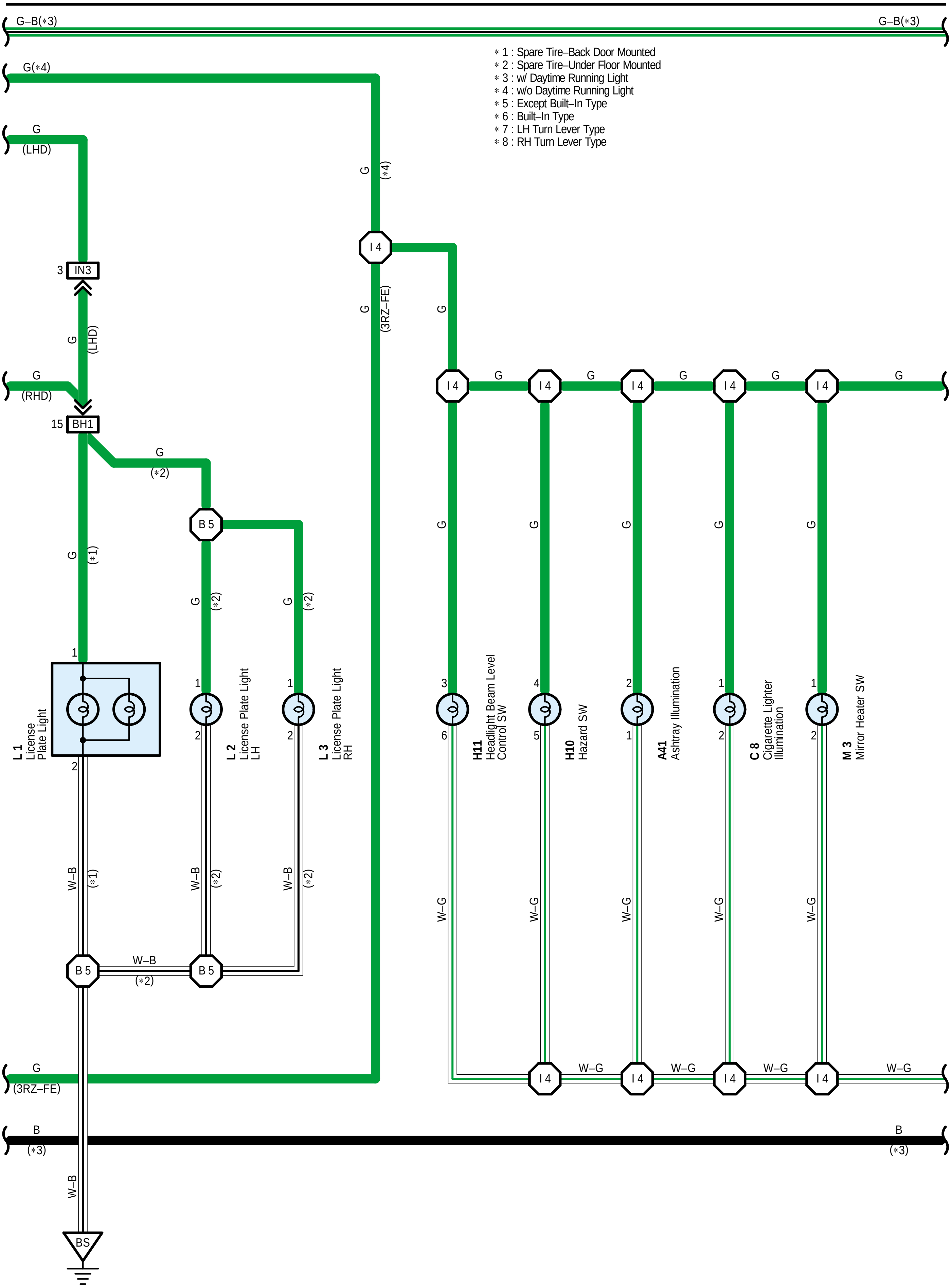

G–B(∗3)
G(∗4)
G (LHD)
G (RHD)
G (3RZ–FE)
B (∗3)
∗1 : Spare Tire–Back Door Mounted
∗2 : Spare Tire–Under Floor Mounted
∗3 : w/ Daytime Running Light
∗4 : w/o Daytime Running Light
∗5 : Except Built–In Type
∗6 : Built–In Type
∗7 : LH Turn Lever Type
∗8 : RH Turn Lever Type
IN3
BH1
I4
B5
BS
W–B
W–G
L 1 License Plate Light
L 2 License Plate Light LH
L 3 License Plate Light RH
H11 Headlight Beam Level Control SW
H10 Hazard SW
A41 Ashtray Illumination
C 8 Cigarette Lighter Illumination
M 3 Mirror Heater SW

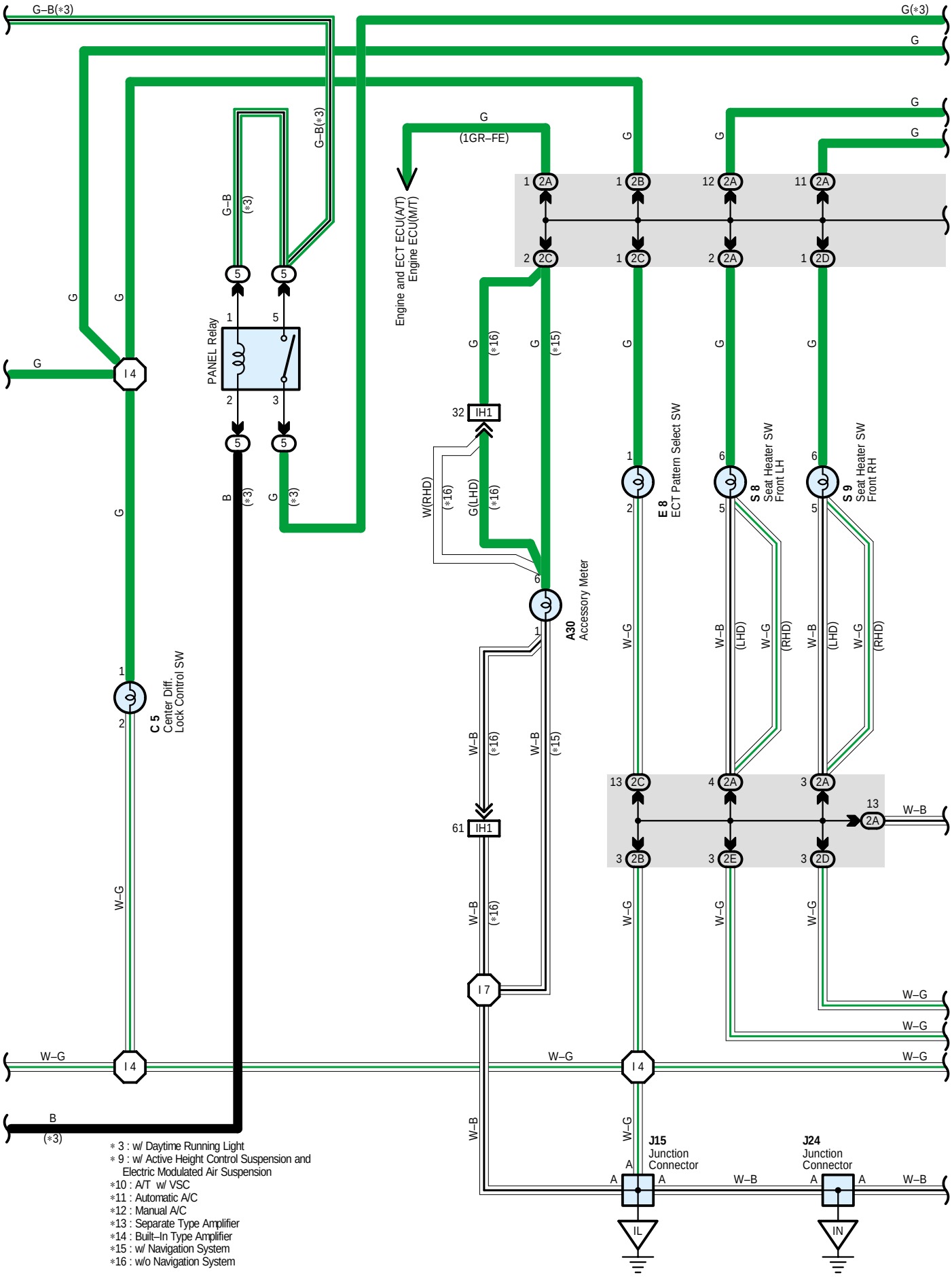
G–B(*3)
G(*3)
G
G–B(*3)
G–B
(*3)
PANEL Relay
I 4
G
(1GR–FE)
Engine and ECT ECU(A/T)
Engine ECU(M/T)
2A
2B
2C
2D
2E
IH1
32
61
I 7
(*16)
(*15)
W(RHD)
G(LHD)
A30
Accessory Meter
E 8
ECT Pattern Select SW
S 8
Seat Heater SW
Front LH
S 9
Seat Heater SW
Front RH
C 5
Center Diff.
Lock Control SW
W–G
W–B
(LHD)
(RHD)
B
J15
Junction
Connector
J24
Junction
Connector
IL
IN
* 3 : w/ Daytime Running Light
* 9 : w/ Active Height Control Suspension and
Electric Modulated Air Suspension
*10 : A/T w/ VSC
*11 : Automatic A/C
*12 : Manual A/C
*13 : Separate Type Amplifier
*14 : Built–In Type Amplifier
*15 : w/ Navigation System
*16 : w/o Navigation System

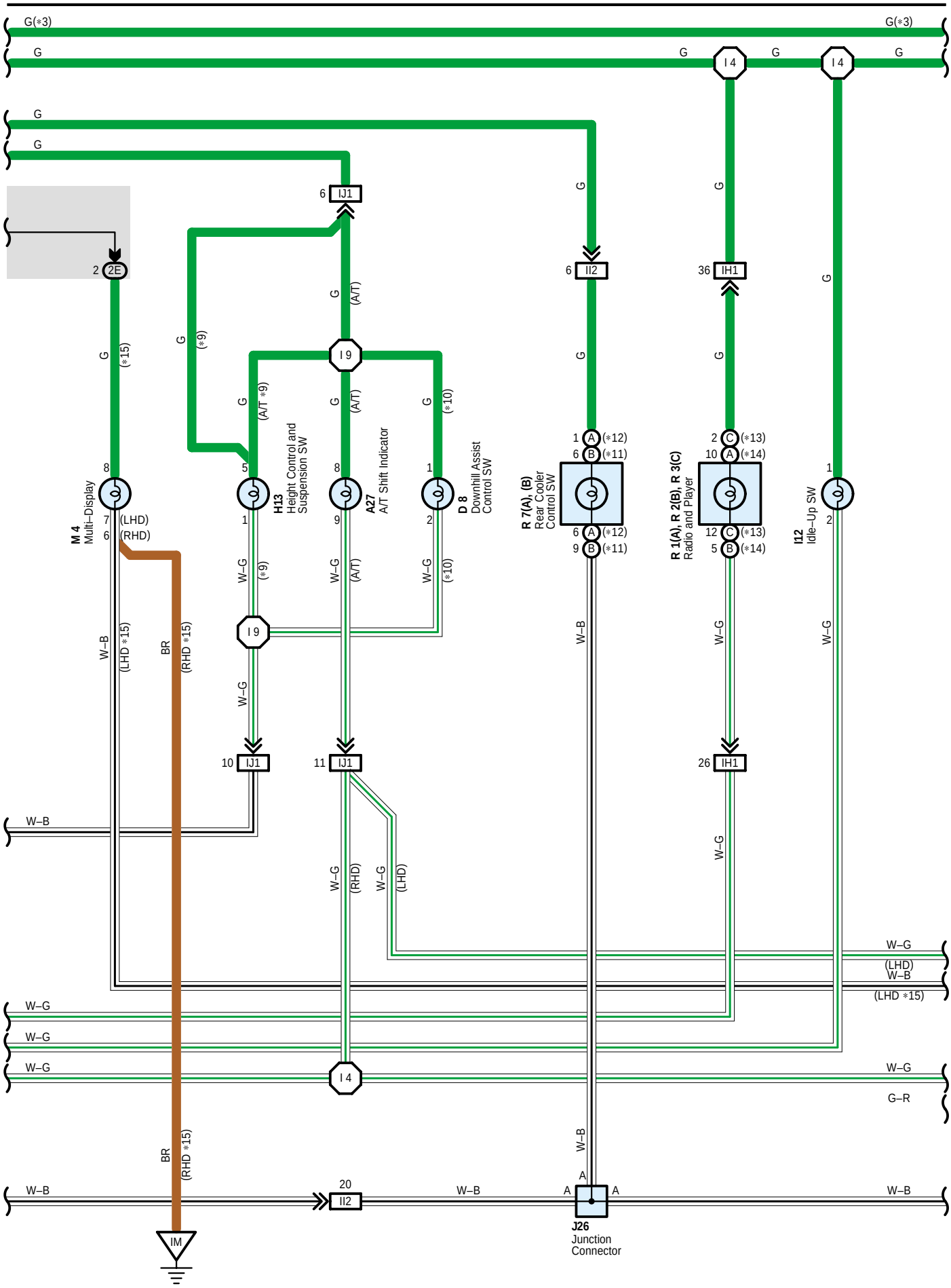
G(*3)
G
I 4
IJ1
2E
II2
IH1
I 9
M 4
Multi–Display
(LHD)
(RHD)
H13
Height Control and Suspension SW
A27
A/T Shift Indicator
D 8
Downhill Assist Control SW
R 7(A), (B)
Rear Cooler Control SW
R 1(A), R 2(B), R 3(C)
Radio and Player
I12
Idle–Up SW
W–B
W–G
BR
G–R
(LHD *15)
(RHD *15)
(A/T)
(A/T *9)
(*9)
(*10)
(*11)
(*12)
(*13)
(*14)
(*15)
J26
Junction Connector
IM

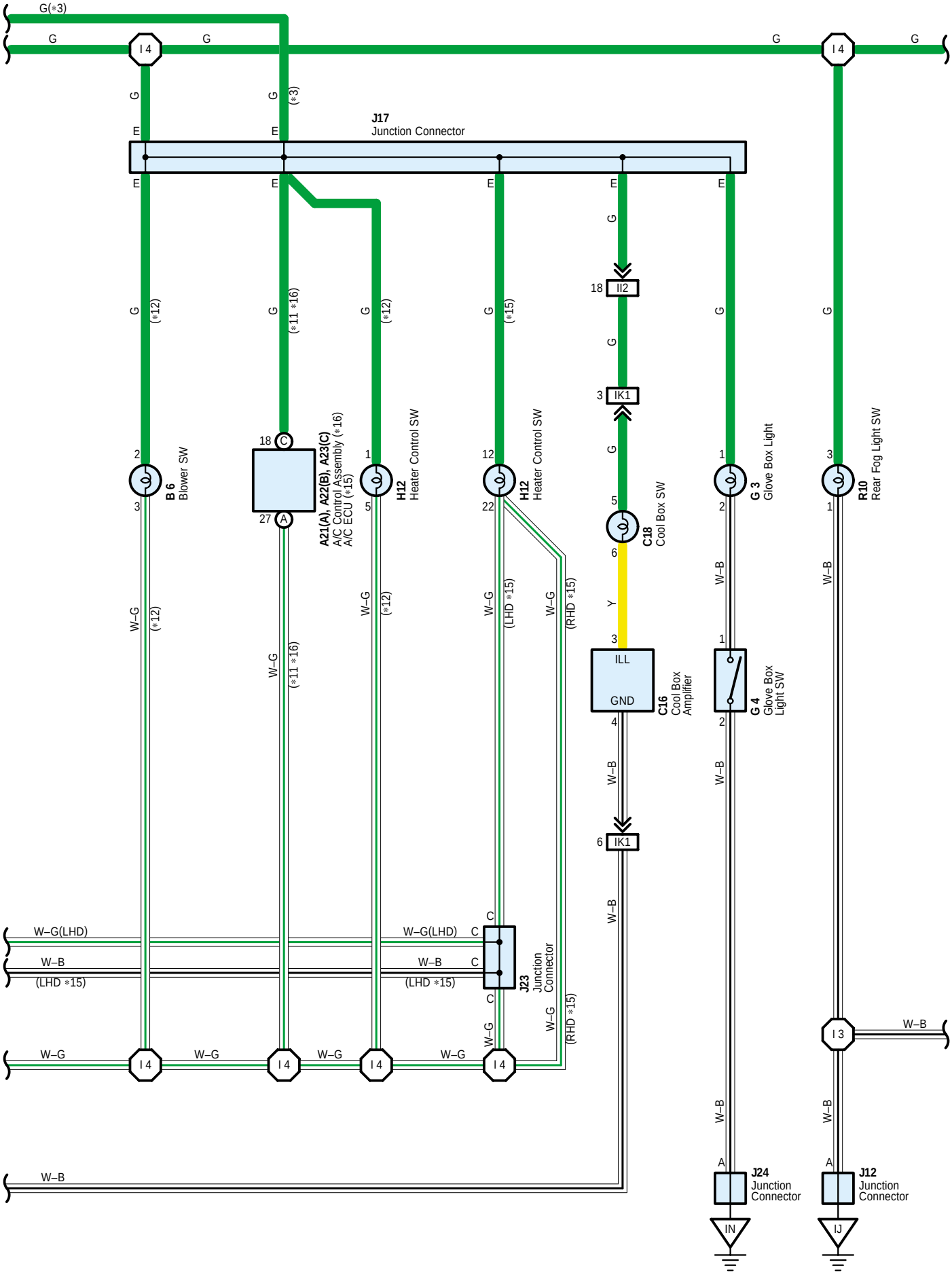
G(*3)
G
I 4
G
G
I 4
G
G
G
(*3)
J17
Junction Connector
E
E
E
E
E
E
G
18
II2
G
3
IK1
G
5
6
C18
Cool Box SW
Y
3
ILL
GND
C16
Cool Box
Amplifier
4
W–B
6
IK1
W–B
G
(*12)
G
(*11 *16)
G
(*12)
G
(*15)
G
G
G
2
3
B 6
Blower SW
18
C
27
A
A21(A), A22(B), A23(C)
A/C Control Assembly (*16)
A/C ECU (*15)
1
5
H12
Heater Control SW
12
22
H12
Heater Control SW
1
2
G 3
Glove Box Light
3
1
R10
Rear Fog Light SW
W–G
(*12)
W–G
(*11 *16)
W–G
(*12)
W–G
(LHD *15)
W–G
(RHD *15)
W–B
W–B
1
2
G 4
Glove Box
Light SW
W–B
W–B
W–G(LHD)
W–B
(LHD *15)
W–G(LHD)
W–B
(LHD *15)
C
C
C
C
J23
Junction
Connector
W–G
(RHD *15)
W–G
I 4
W–G
I 4
W–G
I 4
W–G
I 4
I 3
W–B
W–B
W–B
A
J24
Junction
Connector
IN
A
J12
Junction
Connector
IJ
W–B

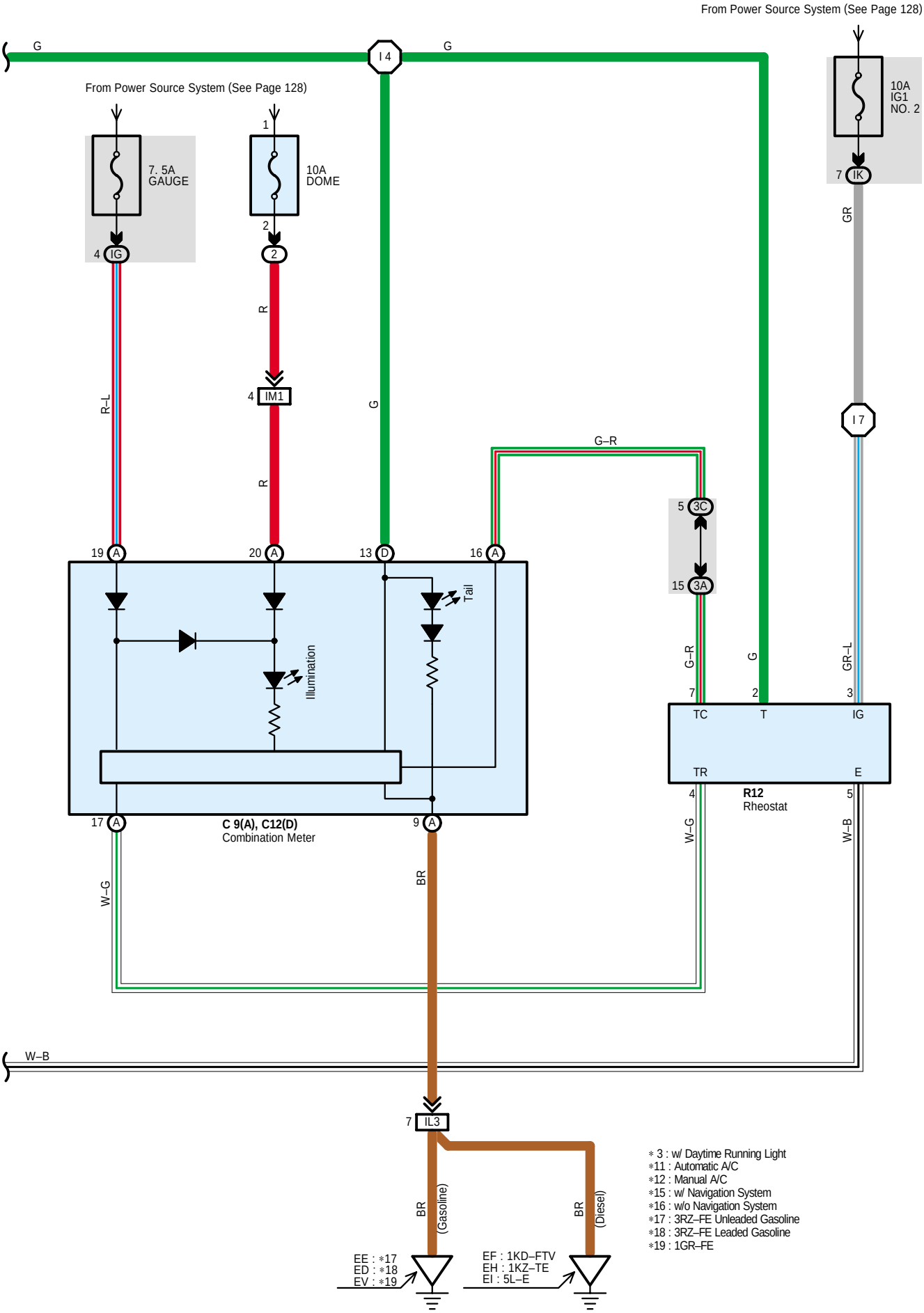
From Power Source System (See Page 128)
From Power Source System (See Page 128)
G
I 4
G
7. 5A
GAUGE
10A
DOME
10A
IG1
NO. 2
4 IG
1
2
2
7 IK
R
GR
R–L
4 IM1
G
I 7
G–R
R
5 3C
19 A
20 A
13 D
16 A
15 3A
Tail
Illumination
G–R
G
GR–L
7
2
3
TC
T
IG
TR
E
4
5
R12
Rheostat
17 A
C 9(A), C12(D)
Combination Meter
9 A
W–G
W–B
W–G
BR
W–B
7 IL3
BR
(Gasoline)
BR
(Diesel)
EE : ∗17
ED : ∗18
EV : ∗19
EF : 1KD–FTV
EH : 1KZ–TE
EI : 5L–E
∗ 3 : w/ Daytime Running Light
∗11 : Automatic A/C
∗12 : Manual A/C
∗15 : w/ Navigation System
∗16 : w/o Navigation System
∗17 : 3RZ–FE Unleaded Gasoline
∗18 : 3RZ–FE Leaded Gasoline
∗19 : 1GR–FE

Service Hints

C14 Combination SW

14–16 (LH turn lever type), 15–9 (RH turn lever type)–Ground : Continuity with the light control SW at TAIL or HEAD position

○ : **Parts Location**

Code		See Page
A21	A	48 (LHD)
		68 (RHD)
A22	B	48 (LHD)
		68 (RHD)
A23	C	48 (LHD)
		68 (RHD)
A27		48 (LHD)
		68 (RHD)
A30		48 (LHD)
		68 (RHD)
A41		48 (LHD)
		68 (RHD)
B6		48 (LHD)
		68 (RHD)
B7	A	48 (LHD)
		68 (RHD)
B9	C	48 (LHD)
		68 (RHD)
C5		49 (LHD)
		69 (RHD)
C8		49 (LHD)
		69 (RHD)
C9	A	49 (LHD)
		69 (RHD)
C12	D	49 (LHD)
		69 (RHD)
C14		49 (LHD)
		69 (RHD)
C16		49 (LHD)
		69 (RHD)
C18		49 (LHD)
		69 (RHD)
D8		49 (LHD)
		69 (RHD)
E8		49 (LHD)
		69 (RHD)
F1		38 (*1)
		40 (*2)
		42 (*3)
		44 (*4)
		46 (*5)
		58 (*10)
		60 (*11)
		62 (*12)
		64 (*13)
		66 (*14)
F2		38 (*1)
		40 (*2)
		42 (*3)

Code		See Page
F2		44 (*4)
		46 (*5)
		58 (*10)
		60 (*11)
		62 (*12)
		64 (*13)
		66 (*14)
G3		49 (LHD)
		69 (RHD)
G4		49 (LHD)
		69 (RHD)
H10		50 (LHD)
		70 (RHD)
H11		50 (LHD)
		70 (RHD)
H12		50 (LHD)
		70 (RHD)
H13		50 (LHD)
		70 (RHD)
I12		50 (LHD)
		70 (RHD)
J7	A	50 (LHD)
		70 (RHD)
J8	B	50 (LHD)
		70 (RHD)
J12		50 (LHD)
		70 (RHD)
J15		50 (LHD)
		70 (RHD)
J17		50 (LHD)
		70 (RHD)
J18		50 (LHD)
		70 (RHD)
J23		50 (LHD)
		70 (RHD)
J24		50 (LHD)
		70 (RHD)
J26		50 (LHD)
		70 (RHD)
J29		52 (*6)
		54 (*7)
		72 (*15)
		74 (*16)
J30		52 (*6)
		54 (*7)
		72 (*15)
		74 (*16)
J31		52 (*6)
		54 (*7)

Code		See Page
J31		72 (*15)
		74 (*16)
L1		53 (*6)
		55 (*7)
		73 (*15)
		75 (*16)
L2		53 (*6)
		55 (*7)
		73 (*15)
		75 (*16)
L3		53 (*6)
		55 (*7)
		73 (*15)
		75 (*16)
M3		50 (LHD)
		70 (RHD)
M4		50 (LHD)
		70 (RHD)
R1	A	51 (LHD)
		71 (RHD)
R2	B	51 (LHD)
		71 (RHD)
R3	C	51 (LHD)
		71 (RHD)
R7	A	51 (LHD)
		71 (RHD)
	B	51 (LHD)
		71 (RHD)
R10		51 (LHD)
		71 (RHD)
R12		51 (LHD)
		71 (RHD)
R13	A	53 (*6)
		55 (*7)
		73 (*15)
		75 (*16)
R14	B	73 (*15)
		75 (*16)
R15	A	53 (*6)
		55 (*7)
		73 (*15)
		75 (*16)
R16	B	73 (*15)
		75 (*16)
S8		51 (LHD)
		71 (RHD)
S9		51 (LHD)
		71 (RHD)

* 1 : LHD 1GR-FE * 2 : LHD 3RZ-FE * 3 : LHD 1KD-FTV * 4 : LHD 1KZ-TE * 5 : LHD 5L-E * 6 : LHD 5-Door * 7 : LHD 3-Door
* 8 : LHD 8Way Power Seat * 9 : LHD Except 8Way Power Seat * 10 : RHD 1GR-FE * 11 : RHD 3RZ-FE * 12 : RHD 1KD-FTV
* 13 : RHD 1KZ-TE * 14 : RHD 5L-E * 15 : RHD 5-Door * 16 : RHD 3-Door * 17 : RHD 8Way Power Seat
* 18 : RHD Except 8Way Power Seat

: **Relay Blocks**

Code	See Page	Relay Blocks (Relay Block Location)
2	23	Engine Room R/B (Engine Compartment Left)
5	25 (LHD)	Passenger Side R/B (Right Kick Panel)

: **Junction Block and Wire Harness Connector**

Code	See Page	Junction Block and Wire Harness (Connector Location)
IB	26 (LHD)	Engine Room Main Wire and Driver Side J/B (Lower Finish Panel)
	28 (RHD)	
IC	26 (LHD)	
	28 (RHD)	
IF	26 (LHD)	Floor No.2 Wire and Driver Side J/B (Lower Finish Panel)
	28 (RHD)	Floor Wire and Driver Side J/B (Lower Finish Panel)
IG	27 (LHD)	Instrument Panel Wire and Driver Side J/B (Lower Finish Panel)
	29 (RHD)	
IJ	27 (LHD)	
	29 (RHD)	
IK	27 (LHD)	
	29 (RHD)	
IL	27 (LHD)	
	29 (RHD)	
2A	34	Instrument Panel Wire and J/B No.2 (Instrument Panel Reinforcement Center)
2B		
2C		
2D		
2E		
3A	36 (LHD)	Instrument Panel Wire and J/B No.3 (Instrument Panel Reinforcement Right)
	36 (RHD)	Instrument Panel Wire and J/B No.3 (Instrument Panel Reinforcement Left)
3C	36 (LHD)	Instrument Panel Wire and J/B No.3 (Instrument Panel Reinforcement Right)
	36 (RHD)	Instrument Panel Wire and J/B No.3 (Instrument Panel Reinforcement Left)
3D	36 (LHD)	Instrument Panel Wire and J/B No.3 (Instrument Panel Reinforcement Right)
	36 (RHD)	Instrument Panel Wire and J/B No.3 (Instrument Panel Reinforcement Left)

: Connector Joining Wire Harness and Wire Harness

Code	See Page	Joining Wire Harness and Wire Harness (Connector Location)
ID2	114 (RHD)	Instrument Panel Wire and Floor No.2 Wire (Left Kick Panel)
IH1	90 (LHD)	Instrument Panel Wire and Instrument Panel No.2 Wire (Instrument Panel Brace LH)
	114 (RHD)	
II2	90 (LHD)	Console Box Wire and Instrument Panel Wire (Under the Instrument Panel Brace LH)
	114 (RHD)	
IJ1	92 (LHD)	Instrument Panel Wire and Switch Wire (Front Side of the Console Box)
	116 (RHD)	
IK1	92 (LHD)	Console Box Wire and A/C Sub Wire (Rear Side of the Console Box)
	116 (RHD)	
IL3	92 (LHD)	Engine Wire and Instrument Panel Wire (Right Side of the Blower Unit)
	116 (RHD)	Engine Wire and Instrument Panel Wire (Left Side of the Blower Unit)
IM1	92 (LHD)	Instrument Panel Wire and Engine Room Main Wire (Right Kick Panel)
	116 (RHD)	
IN3	94 (LHD)	Instrument Panel Wire and Floor Wire (Right Kick Panel)
BH1	98 (*6)	Back Door No.1 Wire and Floor Wire (Right Quarter Panel Inner)
	100 (*7)	
	122 (*15)	
	124 (*16)	

* 1 : LHD 1GR-FE * 2 : LHD 3RZ-FE * 3 : LHD 1KD-FTV * 4 : LHD 1KZ-TE * 5 : LHD 5L-E * 6 : LHD 5-Door * 7 : LHD 3-Door
* 8 : LHD 8Way Power Seat * 9 : LHD Except 8Way Power Seat * 10 : RHD 1GR-FE * 11 : RHD 3RZ-FE * 12 : RHD 1KD-FTV
* 13 : RHD 1KZ-TE * 14 : RHD 5L-E * 15 : RHD 5-Door * 16 : RHD 3-Door * 17 : RHD 8Way Power Seat
* 18 : RHD Except 8Way Power Seat

▽ : **Ground Points**

Code	See Page	Ground Points Location
EA	78 (*1)	Front Right Fender
	80 (*2)	
	82 (*3)	
	84 (*4)	
	86 (*5)	
	102 (*10)	
	104 (*11)	
	106 (*12)	
	108 (*13)	
	110 (*14)	
EB	78 (*1)	Front Left Fender
	80 (*2)	
	82 (*3)	
	84 (*4)	
	86 (*5)	
	102 (*10)	
	104 (*11)	
	106 (*12)	
	108 (*13)	
	110 (*14)	
ED	80 (*2)	Ignition Coil Bracket
	104 (*11)	
EE	80 (*2)	Intake Manifold
	104 (*11)	
EF	82 (*3)	Rear Part of Cylinder Block
	106 (*12)	
EH	84 (*4)	
	108 (*13)	
EI	86 (*5)	
	110 (*14)	
EV	78 (*1)	Rear Side of Left Bank Cylinder Block
	102 (*10)	
IJ	88 (LHD)	Left Kick Panel
	112 (RHD)	Right Kick Panel
IL	88 (LHD)	Near the Right Side of Steering Column
	112 (RHD)	Instrument Panel Brace RH
IM	112 (RHD)	Instrument Panel Brace RH
IN	88 (LHD)	Right Kick Panel
	112 (RHD)	Left Kick Panel
BR	96 (*6)	Left Quarter Panel Inner
	100 (*7)	
	120 (*15)	
	124 (*16)	
BS	96 (*6)	Back Door Panel Center
	100 (*7)	
	120 (*15)	
	124 (*16)	

* 1 : LHD 1GR-FE * 2 : LHD 3RZ-FE * 3 : LHD 1KD-FTV * 4 : LHD 1KZ-TE * 5 : LHD 5L-E * 6 : LHD 5-Door * 7 : LHD 3-Door
* 8 : LHD 8Way Power Seat * 9 : LHD Except 8Way Power Seat * 10 : RHD 1GR-FE * 11 : RHD 3RZ-FE * 12 : RHD 1KD-FTV
* 13 : RHD 1KZ-TE * 14 : RHD 5L-E * 15 : RHD 5-Door * 16 : RHD 3-Door * 17 : RHD 8Way Power Seat
* 18 : RHD Except 8Way Power Seat

: **Splice Points**

Code	See Page	Wire Harness with Splice Points	Code	See Page	Wire Harness with Splice Points
I3	90 (LHD)	Instrument Panel Wire	I9	90 (LHD)	Switch Wire
	114 (RHD)			114 (RHD)	
I4	90 (LHD)		B5	98 (*6)	Back Door No.1 Wire
	114 (RHD)			100 (*7)	
I7	90 (LHD)			122 (*15)	
	114 (RHD)			124 (*16)	

* 1 : LHD 1GR-FE * 2 : LHD 3RZ-FE * 3 : LHD 1KD-FTV * 4 : LHD 1KZ-TE * 5 : LHD 5L-E * 6 : LHD 5-Door * 7 : LHD 3-Door
* 8 : LHD 8Way Power Seat * 9 : LHD Except 8Way Power Seat * 10 : RHD 1GR-FE * 11 : RHD 3RZ-FE * 12 : RHD 1KD-FTV
* 13 : RHD 1KZ-TE * 14 : RHD 5L-E * 15 : RHD 5-Door * 16 : RHD 3-Door * 17 : RHD 8Way Power Seat
* 18 : RHD Except 8Way Power Seat

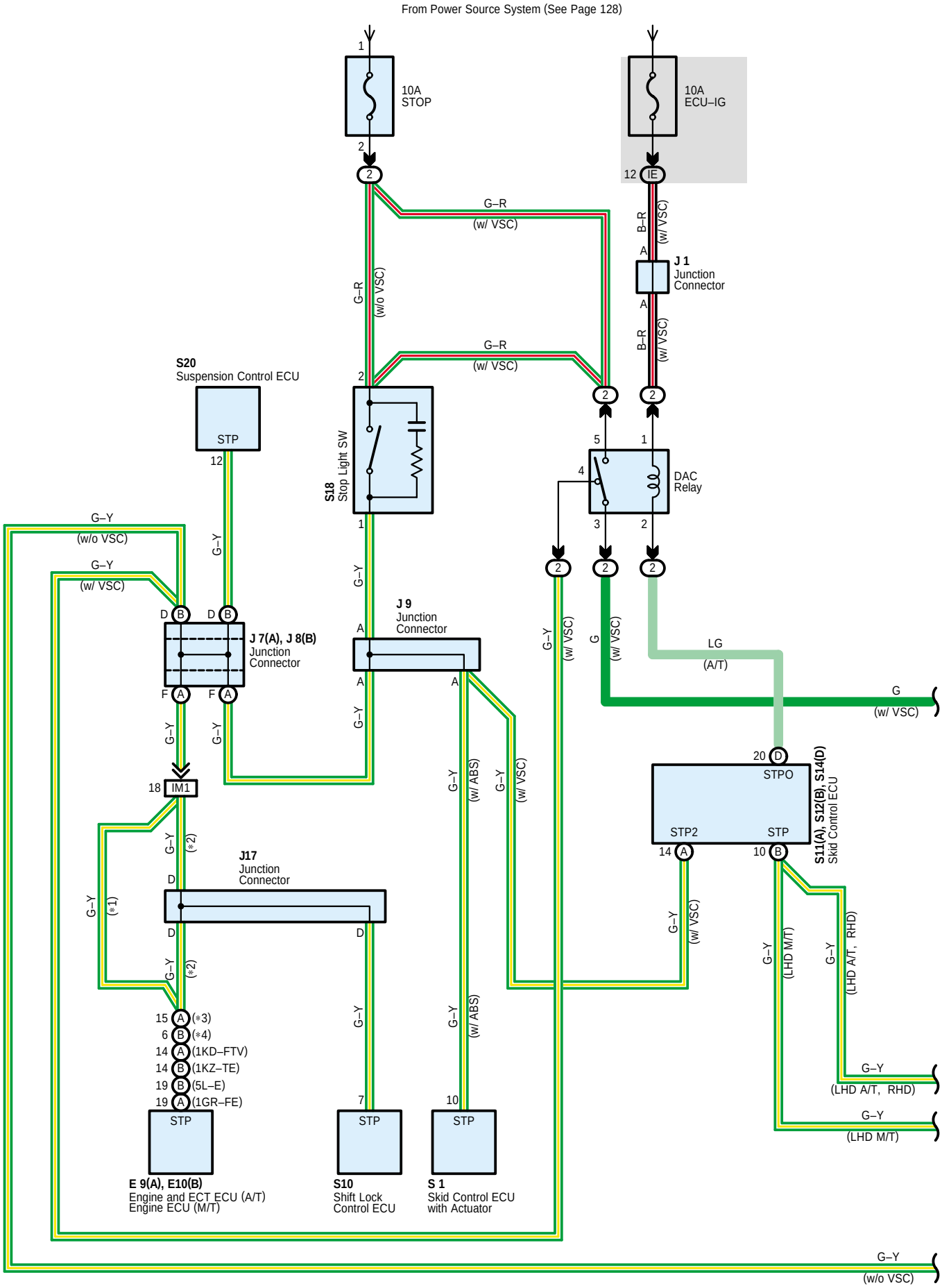
From Power Source System (See Page 128)
10A
STOP
10A
ECU–IG
G–R
(w/ VSC)
G–R
(w/o VSC)
B–R
(w/ VSC)
J 1
Junction
Connector
S20
Suspension Control ECU
STP
S18
Stop Light SW
DAC
Relay
G–Y
(w/o VSC)
G–Y
(w/ VSC)
J 7(A), J 8(B)
Junction
Connector
J 9
Junction
Connector
LG
(A/T)
G
(w/ VSC)
IM1
J17
Junction
Connector
(*1)
(*2)
(*3)
(*4)
(1KD–FTV)
(1KZ–TE)
(5L–E)
(1GR–FE)
(w/ ABS)
STPO
STP2
STP
S11(A), S12(B), S14(D)
Skid Control ECU
(LHD M/T)
(LHD A/T, RHD)
E 9(A), E10(B)
Engine and ECT ECU (A/T)
Engine ECU (M/T)
S10
Shift Lock
Control ECU
S 1
Skid Control ECU
with Actuator

* 1 : LHD 5L–E Bench Seat Type, RHD 5L–E
* 2 : Except *1
* 3 : 3RZ–FE Unleaded Gasoline
* 4 : 3RZ–FE Leaded Gasoline

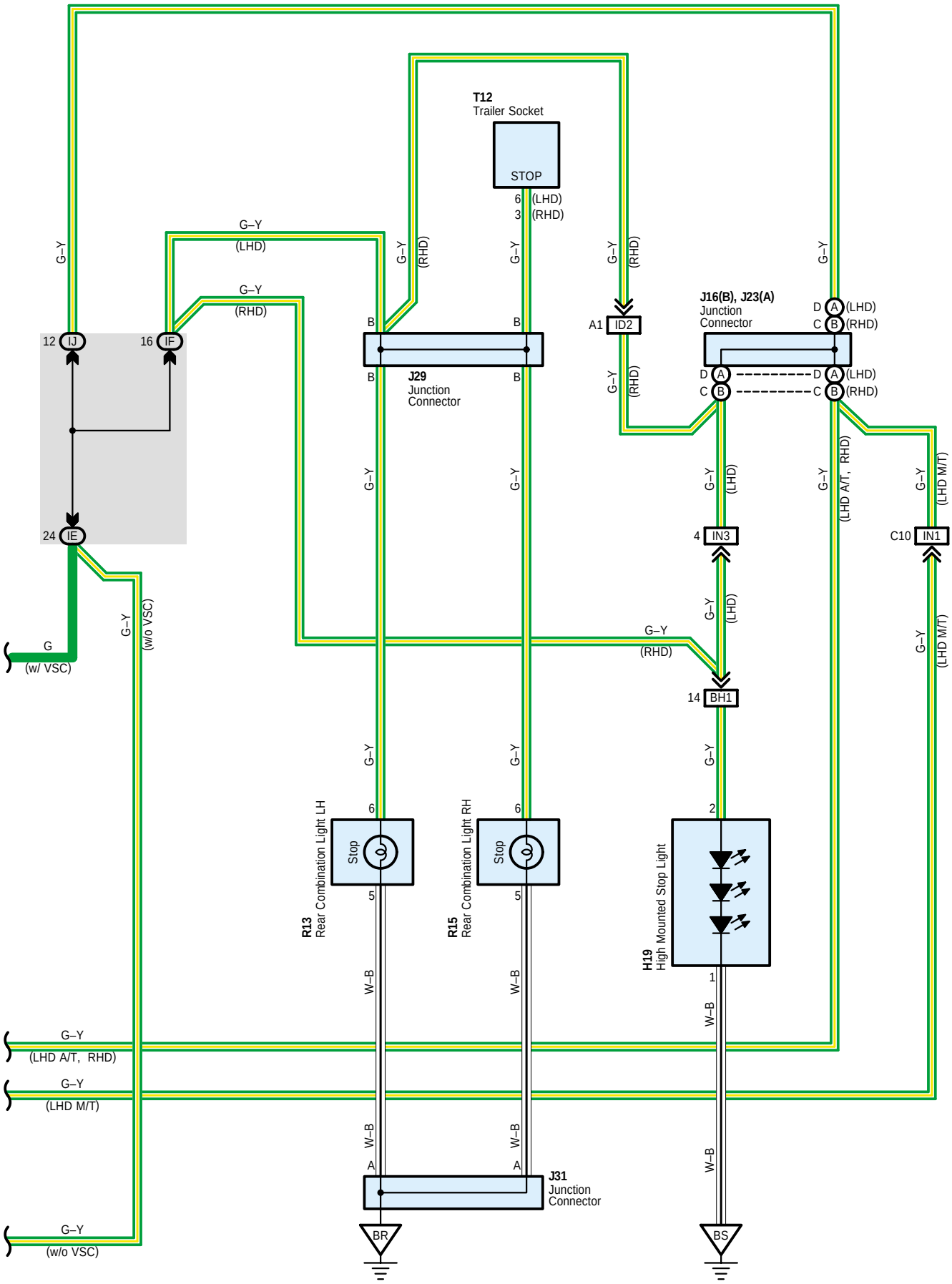

Stop Light

Service Hints

S18 Stop Light SW

2–1 : Closed with the brake pedal depressed

: Parts Location

Code		See Page	Code		See Page	Code		See Page
E9	A	49 (LHD)	J17		70 (RHD)	S1		45 (*4)
		69 (RHD)	J23	A	50 (LHD)			59 (*10)
E10	B	49 (LHD)	J29		52 (*6)			61 (*11)
		69 (RHD)			54 (*7)			63 (*12)
H19		52 (*6)			72 (*15)			65 (*13)
		54 (*7)			74 (*16)	S10		51 (LHD)
		72 (*15)	J31		52 (*6)			71 (RHD)
		74 (*16)			54 (*7)	S11	A	51 (LHD)
J1		39 (*1)			72 (*15)			71 (RHD)
		43 (*3)			74 (*16)	S12	B	51 (LHD)
		59 (*10)	R13		53 (*6)			71 (RHD)
		63 (*12)			55 (*7)	S14	D	51 (LHD)
		65 (*13)			73 (*15)			71 (RHD)
J7	A	50 (LHD)			75 (*16)	S18		51 (LHD)
		70 (RHD)	R15		53 (*6)			71 (RHD)
J8	B	50 (LHD)			55 (*7)	S20		51 (LHD)
		70 (RHD)			73 (*15)			71 (RHD)
J9		50 (LHD)			75 (*16)	T12		53 (*6)
		70 (RHD)	S1		39 (*1)			55 (*7)
J16	B	70 (RHD)			41 (*2)			73 (*15)
J17		50 (LHD)			43 (*3)			75 (*16)

: Relay Blocks

Code	See Page	Relay Blocks (Relay Block Location)
2	23	Engine Room R/B (Engine Compartment Left)

: Junction Block and Wire Harness Connector

Code	See Page	Junction Block and Wire Harness (Connector Location)
IE	26 (LHD)	Engine Room Main Wire and Driver Side J/B (Lower Finish Panel)
	28 (RHD)	
IF	26 (LHD)	Floor No.2 Wire and Driver Side J/B (Lower Finish Panel)
	28 (RHD)	Floor Wire and Driver Side J/B (Lower Finish Panel)
IJ	27 (LHD)	Instrument Panel Wire and Driver Side J/B (Lower Finish Panel)
	29 (RHD)	

* 1 : LHD 1GR–FE * 2 : LHD 3RZ–FE * 3 : LHD 1KD–FTV * 4 : LHD 1KZ–TE * 5 : LHD 5L–E * 6 : LHD 5–Door * 7 : LHD 3–Door
* 8 : LHD 8Way Power Seat * 9 : LHD Except 8Way Power Seat * 10 : RHD 1GR–FE * 11 : RHD 3RZ–FE * 12 : RHD 1KD–FTV
* 13 : RHD 1KZ–TE * 14 : RHD 5L–E * 15 : RHD 5–Door * 16 : RHD 3–Door * 17 : RHD 8Way Power Seat
* 18 : RHD Except 8Way Power Seat

: Connector Joining Wire Harness and Wire Harness

Code	See Page	Joining Wire Harness and Wire Harness (Connector Location)
ID2	114 (RHD)	Instrument Panel Wire and Floor No.2 Wire (Left Kick Panel)
IM1	92 (LHD)	Instrument Panel Wire and Engine Room Main Wire (Right Kick Panel)
	116 (RHD)	
IN1	94 (LHD)	Instrument Panel Wire and Floor Wire (Right Kick Panel)
IN3		
BH1	98 (*6)	Back Door No.1 Wire and Floor Wire (Right Quarter Panel Inner)
	100 (*7)	
	122 (*15)	
	124 (*16)	

: Ground Points

Code	See Page	Ground Points Location
BR	96 (*6)	Left Quarter Panel Inner
	100 (*7)	
	120 (*15)	
	124 (*16)	
BS	96 (*6)	Back Door Panel Center
	100 (*7)	
	120 (*15)	
	124 (*16)	

* 1 : LHD 1GR-FE * 2 : LHD 3RZ-FE * 3 : LHD 1KD-FTV * 4 : LHD 1KZ-TE * 5 : LHD 5L-E * 6 : LHD 5-Door * 7 : LHD 3-Door
* 8 : LHD 8Way Power Seat * 9 : LHD Except 8Way Power Seat * 10 : RHD 1GR-FE * 11 : RHD 3RZ-FE * 12 : RHD 1KD-FTV
* 13 : RHD 1KZ-TE * 14 : RHD 5L-E * 15 : RHD 5-Door * 16 : RHD 3-Door * 17 : RHD 8Way Power Seat
* 18 : RHD Except 8Way Power Seat

Back–Up Light (Gasoline)

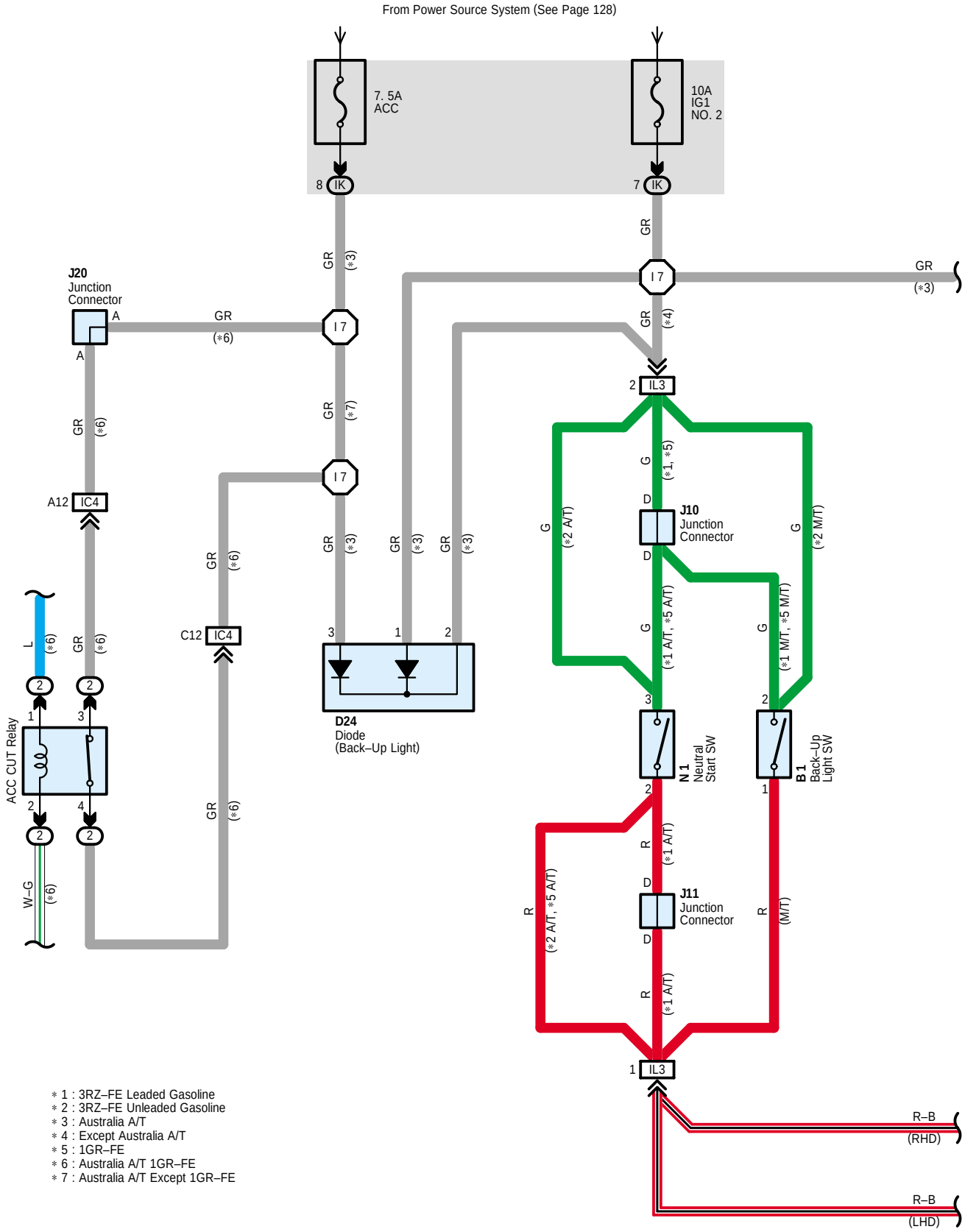

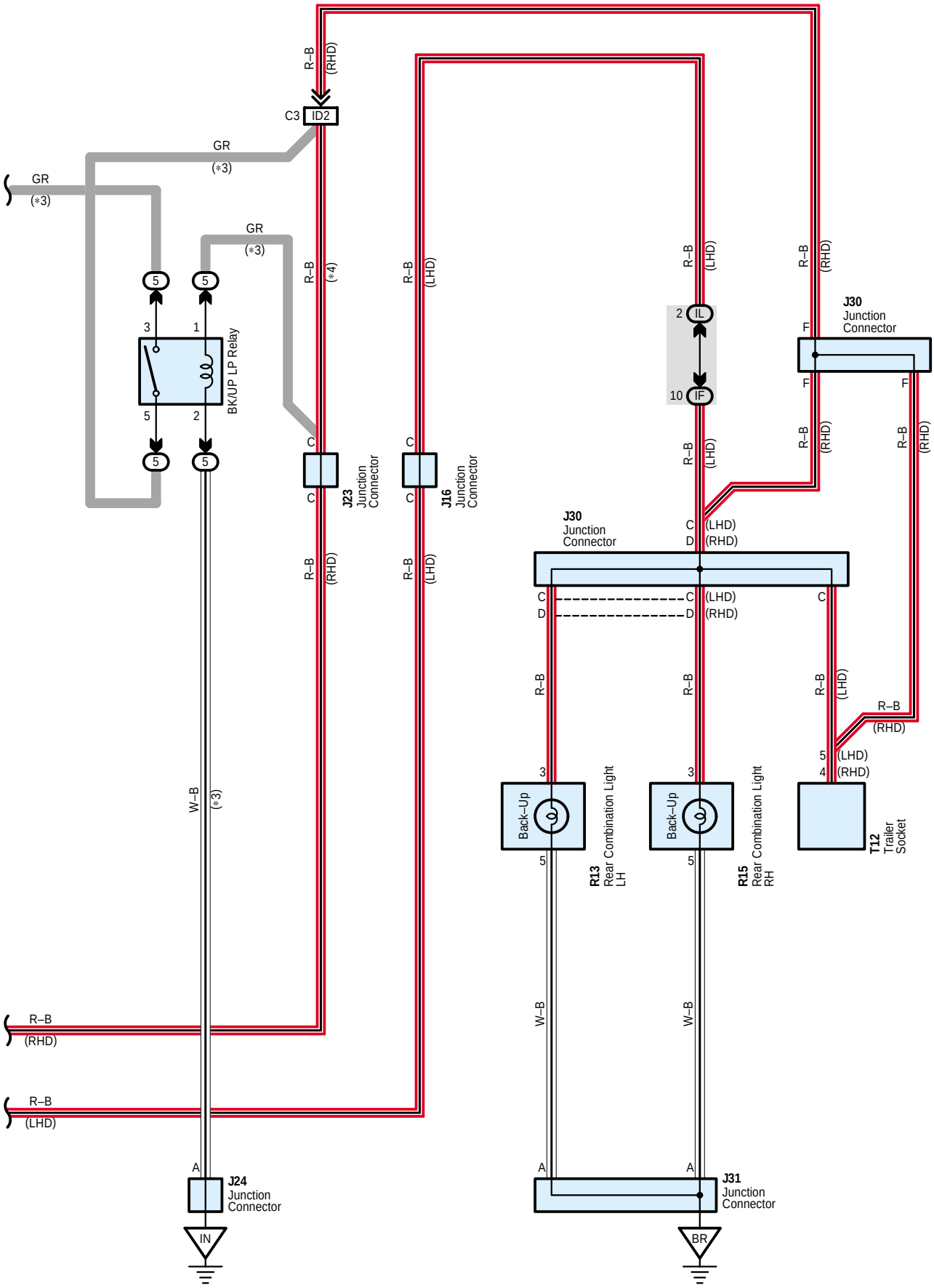
R–B
(RHD)
C3
ID2
GR
(*3)
GR
(*3)
GR
(*3)
5
5
3
1
BK/UP LP Relay
5
2
5
5
R–B
(*4)
R–B
(LHD)
C
C
J23
Junction
Connector
C
C
J16
Junction
Connector
R–B
(RHD)
R–B
(LHD)
R–B
(LHD)
R–B
(RHD)
2
IL
10
IF
J30
Junction
Connector
F
F
F
R–B
(LHD)
R–B
(RHD)
R–B
(RHD)
J30
Junction
Connector
C
(LHD)
D
(RHD)
C
(LHD)
D
(RHD)
C
R–B
R–B
R–B
(LHD)
R–B
(RHD)
3
Back–Up
5
R13
Rear Combination Light
LH
3
Back–Up
5
R15
Rear Combination Light
RH
5
(LHD)
4
(RHD)
T12
Trailer
Socket
W–B
(*3)
W–B
W–B
R–B
(RHD)
R–B
(LHD)
A
J24
Junction
Connector
IN
A
A
J31
Junction
Connector
BR

Back-Up Light (Gasoline)

Service Hints

N1 Neutral Start SW
3-2 : Continuity with the shift lever in R position

B1 Back-Up Light SW
1-2 : Continuity with the shift lever in R position

: Parts Location

Code	See Page	Code	See Page	Code	See Page
B1	38 (*1)	J24	50 (LHD)	R13	53 (*6)
	40 (*2)		70 (RHD)		55 (*7)
	58 (*10)	J30	72 (*15)		73 (*15)
	60 (*11)		74 (*16)		75 (*16)
D24	69 (RHD)	J31	52 (*6)	R15	53 (*6)
J10	50 (LHD)		54 (*7)		55 (*7)
	70 (RHD)		72 (*15)		73 (*15)
J11	50 (LHD)		74 (*16)		75 (*16)
	70 (RHD)	N1	39 (*1)	T12	53 (*6)
J16	50 (LHD)		41 (*2)		55 (*7)
J20	70 (RHD)		59 (*10)		73 (*15)
J23	70 (RHD)		61 (*11)		75 (*16)

: Relay Blocks

Code	See Page	Relay Blocks (Relay Block Location)
2	23	Engine Room R/B (Engine Compartment Left)
5	25 (RHD)	Passenger Side R/B (Left Kick Panel)

: Junction Block and Wire Harness Connector

Code	See Page	Junction Block and Wire Harness (Connector Location)
IF	26 (LHD)	Floor No.2 Wire and Driver Side J/B (Lower Finish Panel)
IK	27 (LHD)	Instrument Panel Wire and Driver Side J/B (Lower Finish Panel)
	29 (RHD)	
IL	27 (LHD)	

: Connector Joining Wire Harness and Wire Harness

Code	See Page	Joining Wire Harness and Wire Harness (Connector Location)
IC4	112 (RHD)	Instrument Panel Wire and Engine Room Main Wire (Left Kick Panel)
ID2	114 (RHD)	Instrument Panel Wire and Floor No.2 Wire (Left Kick Panel)
IL3	92 (LHD)	Engine Wire and Instrument Panel Wire (Right Side of the Blower Unit)
	116 (RHD)	Engine Wire and Instrument Panel Wire (Left Side of the Blower Unit)

: Ground Points

Code	See Page	Ground Points Location
IN	112 (RHD)	Left Kick Panel
BR	96 (*6)	Left Quarter Panel Inner
	100 (*7)	
	120 (*15)	
	124 (*16)	

* 1 : LHD 1GR-FE * 2 : LHD 3RZ-FE * 3 : LHD 1KD-FTV * 4 : LHD 1KZ-TE * 5 : LHD 5L-E * 6 : LHD 5-Door * 7 : LHD 3-Door
* 8 : LHD 8Way Power Seat * 9 : LHD Except 8Way Power Seat * 10 : RHD 1GR-FE * 11 : RHD 3RZ-FE * 12 : RHD 1KD-FTV
* 13 : RHD 1KZ-TE * 14 : RHD 5L-E * 15 : RHD 5-Door * 16 : RHD 3-Door * 17 : RHD 8Way Power Seat
* 18 : RHD Except 8Way Power Seat

: **Splice Points**

Code	See Page	Wire Harness with Splice Points	Code	See Page	Wire Harness with Splice Points
I7	90 (LHD)	Instrument Panel Wire	I7	114 (RHD)	Instrument Panel Wire

Back–Up Light (Diesel)

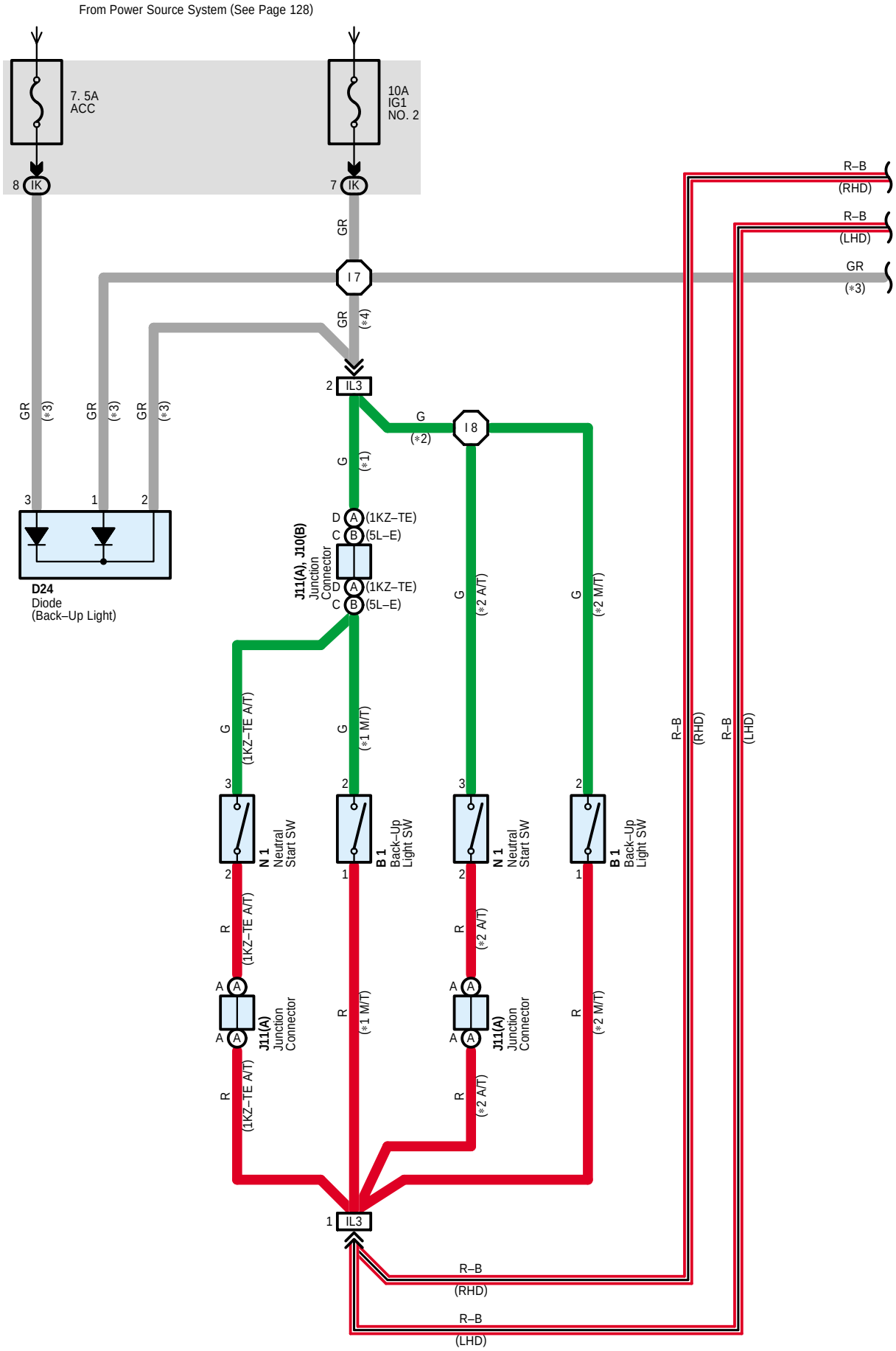

∗1 : 1KZ–TE, 5L–E
∗2 : 1KD–FTV
∗3 : Australia A/T
∗4 : Except Australia A/T

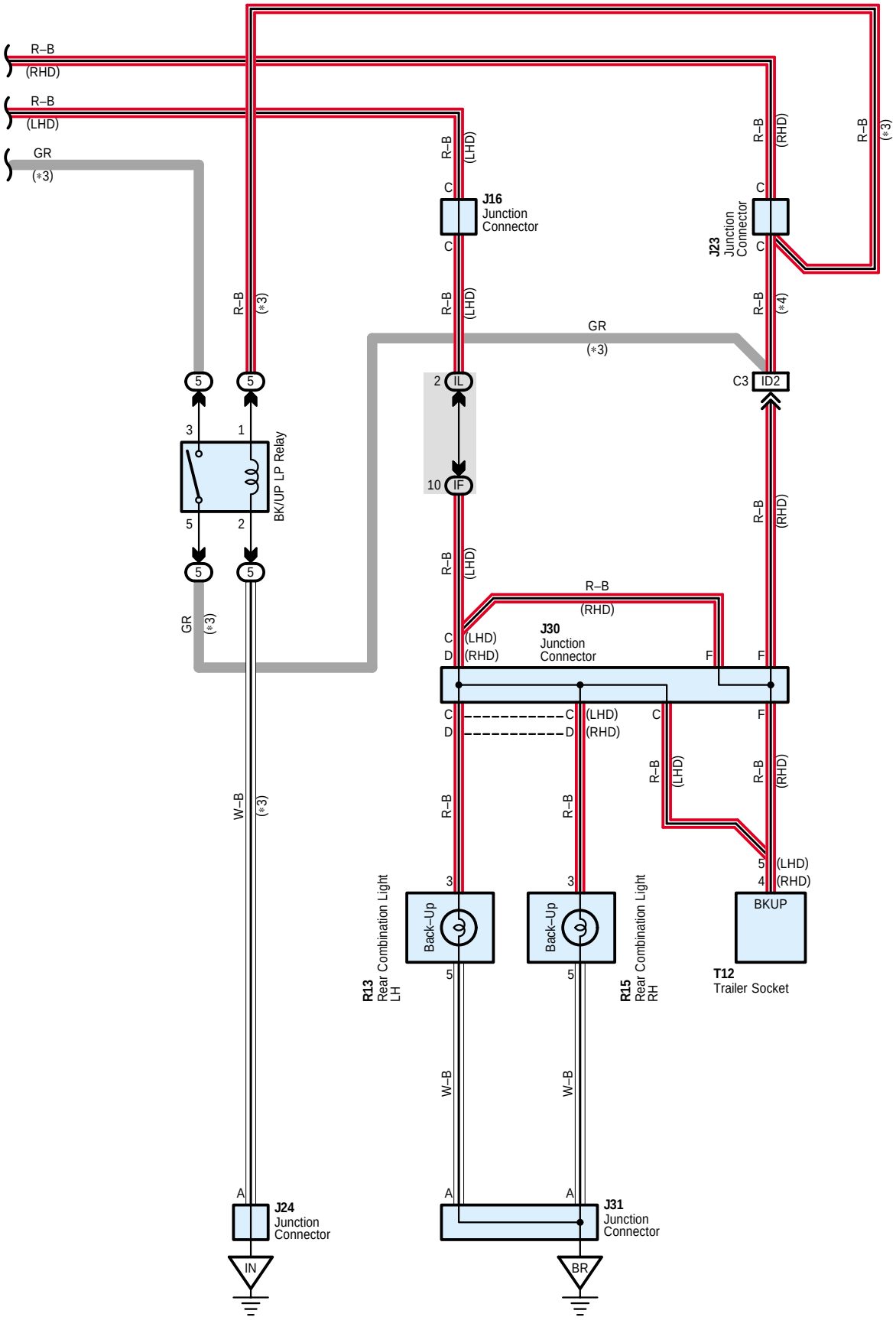

Back-Up Light (Diesel)

Service Hints

N1 Neutral Start SW
3-2 : Continuity with the shift lever in R position

B1 Back-Up Light SW
1-2 : Continuity with the shift lever in R position

: Parts Location

Code	See Page	Code	See Page	Code	See Page
B1	42 (*3)	J24	70 (RHD)	R13	53 (*6)
	44 (*4)	J30	52 (*6)		55 (*7)
	46 (*5)		54 (*7)		73 (*15)
	62 (*12)		72 (*15)		75 (*16)
	64 (*13)		74 (*16)	R15	53 (*6)
	66 (*14)	J31	52 (*6)		55 (*7)
D24	69 (RHD)		54 (*7)		73 (*15)
J10 B	50 (LHD)		72 (*15)		75 (*16)
	70 (RHD)		74 (*16)	T12	53 (*6)
J11 A	50 (LHD)	N1	43 (*3)		55 (*7)
	70 (RHD)		45 (*4)		73 (*15)
J16	50 (LHD)		63 (*12)		75 (*16)
J23	70 (RHD)		65 (*13)		

: Relay Blocks

Code	See Page	Relay Blocks (Relay Block Location)
5	25 (RHD)	Passenger Side R/B (Left Kick Panel)

: Junction Block and Wire Harness Connector

Code	See Page	Junction Block and Wire Harness (Connector Location)
IF	26 (LHD)	Floor No.2 Wire and Driver Side J/B (Lower Finish Panel)
IK	27 (LHD)	Instrument Panel Wire and Driver Side J/B (Lower Finish Panel)
	29 (RHD)	
IL	27 (LHD)	

: Connector Joining Wire Harness and Wire Harness

Code	See Page	Joining Wire Harness and Wire Harness (Connector Location)
ID2	114 (RHD)	Instrument Panel Wire and Floor No.2 Wire (Left Kick Panel)
IL3	92 (LHD)	Engine Wire and Instrument Panel Wire (Right Side of the Blower Unit)
	116 (RHD)	Engine Wire and Instrument Panel Wire (Left Side of the Blower Unit)

: Ground Points

Code	See Page	Ground Points Location
IN	112 (RHD)	Left Kick Panel
BR	96 (*6)	Left Quarter Panel Inner
	100 (*7)	
	120 (*15)	
	124 (*16)	

* 1 : LHD 1GR-FE * 2 : LHD 3RZ-FE * 3 : LHD 1KD-FTV * 4 : LHD 1KZ-TE * 5 : LHD 5L-E * 6 : LHD 5-Door * 7 : LHD 3-Door
* 8 : LHD 8Way Power Seat * 9 : LHD Except 8Way Power Seat * 10 : RHD 1GR-FE * 11 : RHD 3RZ-FE * 12 : RHD 1KD-FTV
* 13 : RHD 1KZ-TE * 14 : RHD 5L-E * 15 : RHD 5-Door * 16 : RHD 3-Door * 17 : RHD 8Way Power Seat
* 18 : RHD Except 8Way Power Seat

: **Splice Points**

Code	See Page	Wire Harness with Splice Points	Code	See Page	Wire Harness with Splice Points
I7	90 (LHD) 114 (RHD)	Instrument Panel Wire	I8	90 (LHD) 114 (RHD)	Engine Wire

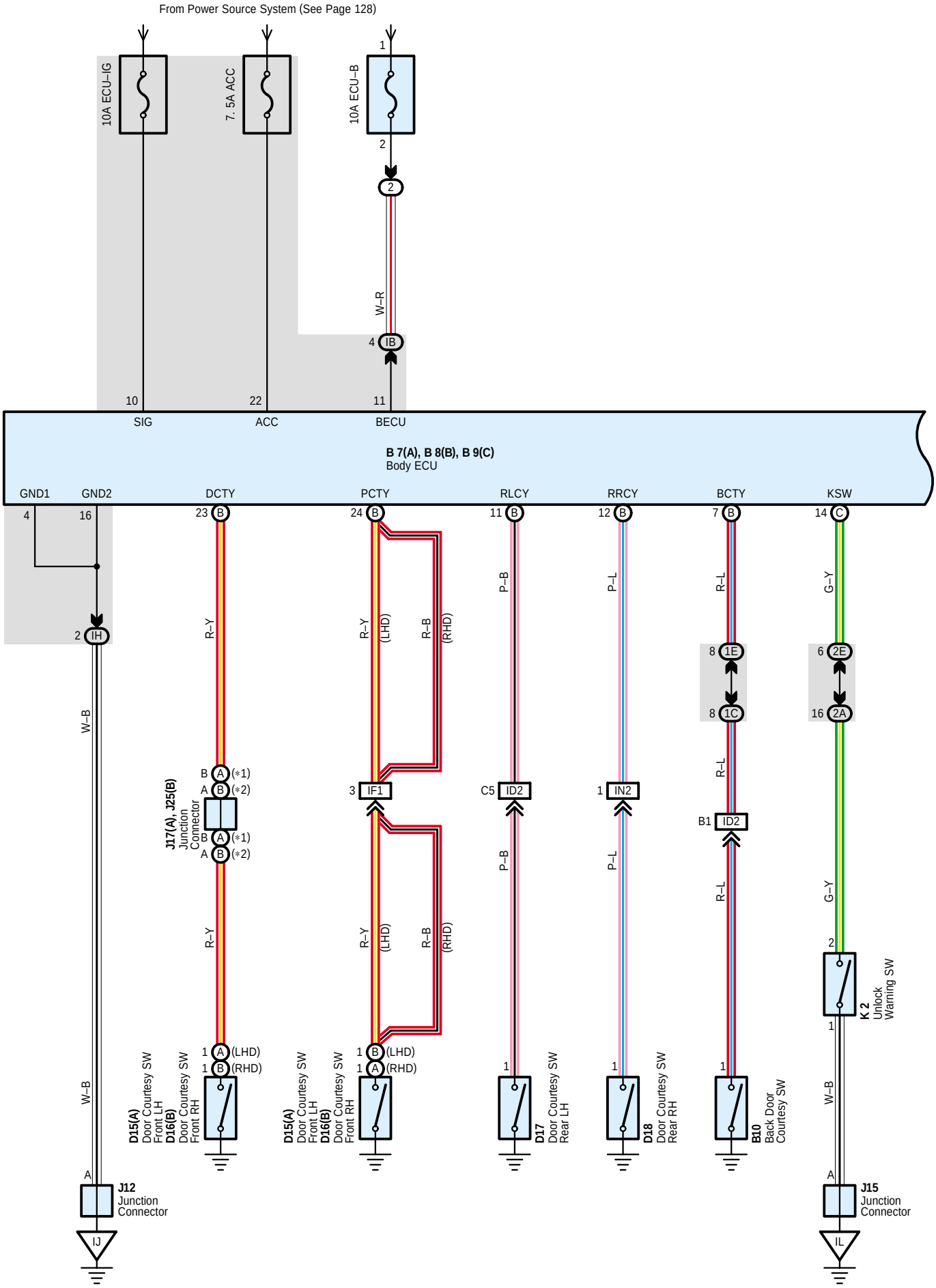
From Power Source System (See Page 128)
10A ECU-IG
7. 5A ACC
10A ECU-B
W-R
IB
SIG
ACC
BECU
B 7(A), B 8(B), B 9(C)
Body ECU
GND1
GND2
DCTY
PCTY
RLCY
RRCY
BCTY
KSW
IH
R-Y
R-B
(LHD)
(RHD)
P-B
P-L
R-L
G-Y
W-B
IF1
ID2
IN2
J17(A), J25(B)
Junction Connector
D15(A)
Door Courtesy SW
Front LH
D16(B)
Door Courtesy SW
Front RH
D17
Door Courtesy SW
Rear LH
D18
Door Courtesy SW
Rear RH
B10
Back Door
Courtesy SW
K 2
Unlock
Warning SW
J12
Junction
Connector
J15
Junction
Connector
IJ
IL

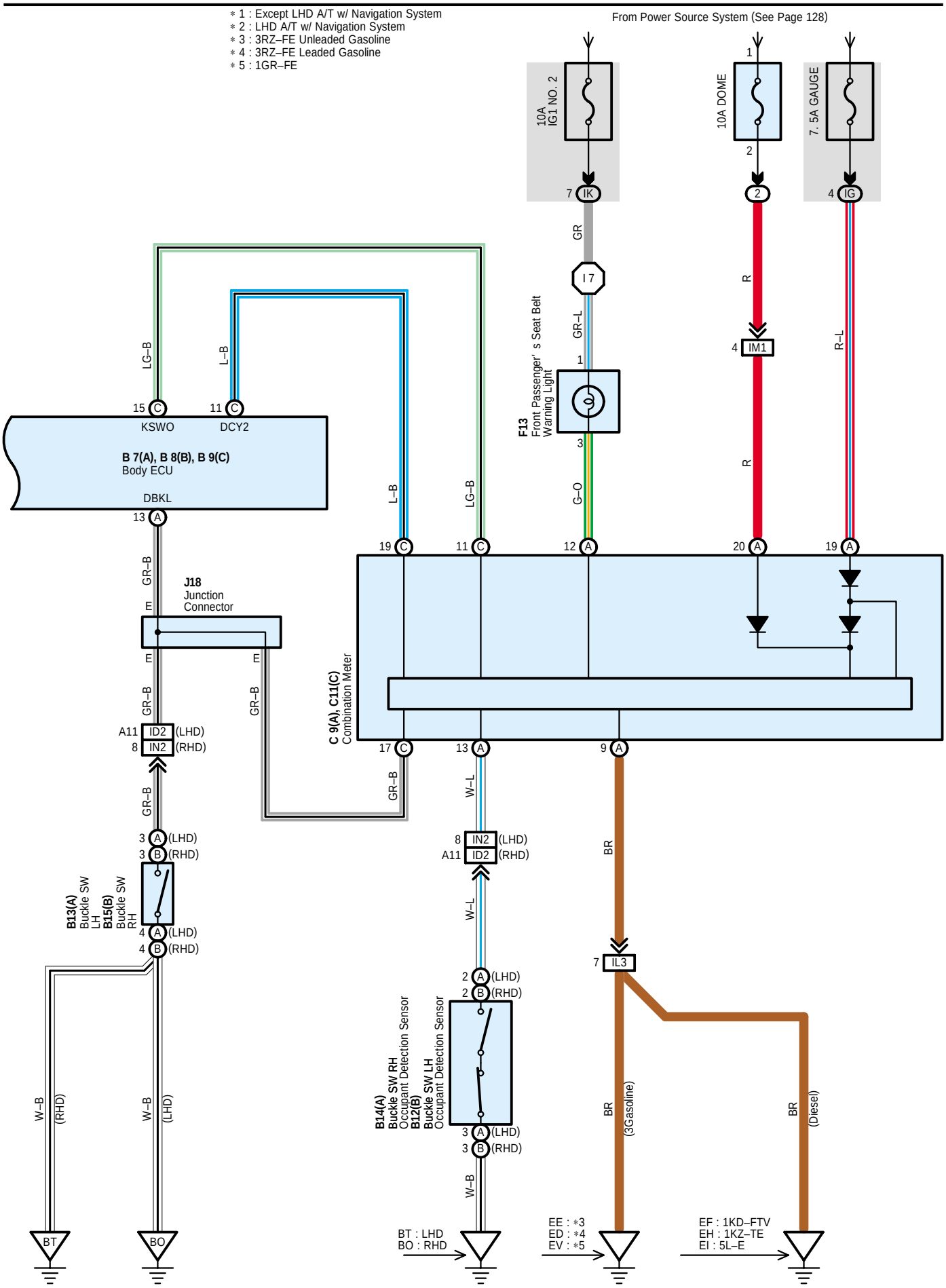
* 1 : Except LHD A/T w/ Navigation System
* 2 : LHD A/T w/ Navigation System
* 3 : 3RZ–FE Unleaded Gasoline
* 4 : 3RZ–FE Leaded Gasoline
* 5 : 1GR–FE
From Power Source System (See Page 128)
10A IG1 NO. 2
10A DOME
7. 5A GAUGE
7 IK
2
4 IG
GR
R
R–L
I 7
GR–L
4 IM1
F13 Front Passenger' s Seat Belt Warning Light
G–O
LG–B
L–B
15 C
11 C
KSWO
DCY2
B 7(A), B 8(B), B 9(C) Body ECU
DBKL
13 A
GR–B
J18 Junction Connector
E
19 C
11 C
12 A
20 A
19 A
C 9(A), C11(C) Combination Meter
A11 ID2 (LHD)
8 IN2 (RHD)
17 C
13 A
9 A
W–L
BR
3 A (LHD)
3 B (RHD)
B13(A) Buckle SW LH
B15(B) Buckle SW RH
4 A (LHD)
4 B (RHD)
8 IN2 (LHD)
A11 ID2 (RHD)
7 IL3
2 A (LHD)
2 B (RHD)
B14(A) Buckle SW RH Occupant Detection Sensor
B12(B) Buckle SW LH Occupant Detection Sensor
3 A (LHD)
3 B (RHD)
W–B
(RHD)
(LHD)
(3Gasoline)
(Diesel)
BT
BO
BT : LHD
BO : RHD
EE : *3
ED : *4
EV : *5
EF : 1KD–FTV
EH : 1KZ–TE
EI : 5L–E

Key Reminder and Seat Belt Warning

System Outline

1. Key Reminder System

With the ignition key inserted in the key cylinder (Unlock warning SW on), the ignition SW still off and driver's door open (Door courtesy SW on), when a signal is input to TERMINAL (B) 23 of the body ECU, the body ECU operates, current flows from TERMINAL (C) 15 of the ECU to TERMINAL (C) 11 of the combination meter to GROUND and key reminder buzzer sounds.

2. Seat Belt Warning System

When the driver has not fastened the seat belt while the ignition SW is ON, the driver seat belt warning light blinks, and a warning buzzer comes on.
Also, in the front passenger seat, a sensor recognizes passenger, and when the passenger has not fastened the seat belt, the front passenger seat belt warning light blinks.

Service Hints

Body ECU

22–Ground : Approx. 12 volts with ignition SW at ACC or ON position
10–Ground : Approx. 12 volts with ignition SW at ON position
4, 16–Ground : Always continuity
11–Ground : Always approx. 12 volts

D15 (A), D16 (B) Door Courtesy SW Front LH, RH

1–Ground : Continuity with the driver door open

K2 Unlock Warning SW

1–2 : Continuity with the ignition key in cylinder

B13 (A), B15 (B) Buckle SW LH, RH

3–4 : Continuity with driver's seat belt in use

B12 (A), B14 (B) Buckle SW RH, LH
Occupant Detection Sensor

2–3 : Continuity with front passenger sit on front passenger seat and front passenger's seat belt not use

○ : Parts Location

Code		See Page	Code		See Page	Code		See Page
B7	A	48 (LHD)	B15	B	76 (*17)	D18		52 (*6)
		68 (RHD)			77 (*18)			72 (*15)
B8	B	48 (LHD)	C9	A	49 (LHD)	F13		49 (LHD)
		68 (RHD)			69 (RHD)			69 (RHD)
B9	C	48 (LHD)	C11	C	49 (LHD)	J12		50 (LHD)
		68 (RHD)			69 (RHD)			70 (RHD)
B10		52 (*6)	D15	A	52 (*6)	J15		50 (LHD)
		54 (*7)			54 (*7)			70 (RHD)
		72 (*15)			72 (*15)	J17	A	50 (LHD)
		74 (*16)			74 (*16)			70 (RHD)
B12	B	76 (*17)	D16	B	52 (*6)	J18		50 (LHD)
		77 (*18)			54 (*7)			70 (RHD)
B13	A	56 (*8)			72 (*15)	J25	B	50 (LHD)
		57 (*9)			74 (*16)			70 (RHD)
B14	A	56 (*8)	D17		52 (*6)	K2		50 (LHD)
		57 (*9)			72 (*15)			70 (RHD)

▭ : Relay Blocks

Code	See Page	Relay Blocks (Relay Block Location)
2	23	Engine Room R/B (Engine Compartment Left)

* 1 : LHD 1GR–FE * 2 : LHD 3RZ–FE * 3 : LHD 1KD–FTV * 4 : LHD 1KZ–TE * 5 : LHD 5L–E * 6 : LHD 5–Door * 7 : LHD 3–Door
* 8 : LHD 8Way Power Seat * 9 : LHD Except 8Way Power Seat * 10 : RHD 1GR–FE * 11 : RHD 3RZ–FE * 12 : RHD 1KD–FTV
* 13 : RHD 1KZ–TE * 14 : RHD 5L–E * 15 : RHD 5–Door * 16 : RHD 3–Door * 17 : RHD 8Way Power Seat
* 18 : RHD Except 8Way Power Seat

: **Junction Block and Wire Harness Connector**

Code	See Page	Junction Block and Wire Harness (Connector Location)
IB	26 (LHD)	Engine Room Main Wire and Driver Side J/B (Lower Finish Panel)
	28 (RHD)	
IG	27 (LHD)	Instrument Panel Wire and Driver Side J/B (Lower Finish Panel)
	29 (RHD)	
IH	27 (LHD)	
	29 (RHD)	
IK	27 (LHD)	
	29 (RHD)	
1C	32 (LHD)	Instrument Panel Wire and J/B No.1 (Instrument Panel Reinforcement Left)
	32 (RHD)	Instrument Panel Wire and J/B No.1 (Instrument Panel Reinforcement Right)
1E	32 (LHD)	Instrument Panel Wire and J/B No.1 (Instrument Panel Reinforcement Left)
	32 (RHD)	Instrument Panel Wire and J/B No.1 (Instrument Panel Reinforcement Right)
2A	34	Instrument Panel Wire and J/B No.2 (Instrument Panel Reinforcement Center)
2E		

: **Connector Joining Wire Harness and Wire Harness**

Code	See Page	Joining Wire Harness and Wire Harness (Connector Location)
ID2	90 (LHD)	Instrument Panel Wire and Floor No.2 Wire (Left Kick Panel)
	114 (RHD)	
IF1	90 (LHD)	Instrument Panel Wire and Instrument Panel Wire (Near the J/B No.1)
	114 (RHD)	
IL3	92 (LHD)	Engine Wire and Instrument Panel Wire (Right Side of the Blower Unit)
	116 (RHD)	Engine Wire and Instrument Panel Wire (Left Side of the Blower Unit)
IM1	92 (LHD)	Instrument Panel Wire and Engine Room Main Wire (Right Kick Panel)
	116 (RHD)	
IN2	94 (LHD)	Instrument Panel Wire and Floor Wire (Right Kick Panel)
	118 (RHD)	

▽ : **Ground Points**

Code	See Page	Ground Points Location
ED	80 (*2)	Ignition Coil Bracket
	104 (*11)	
EE	80 (*2)	Intake Manifold
	104 (*11)	
EF	82 (*3)	Rear Part of Cylinder Block
	106 (*12)	
EH	84 (*4)	
	108 (*13)	
EI	86 (*5)	
	110 (*14)	
EV	78 (*1)	Rear Side of Left Bank Cylinder Block
	102 (*10)	
IJ	88 (LHD)	Left Kick Panel
	112 (RHD)	Right Kick Panel
IL	88 (LHD)	Near the Right Side of Steering Column
	112 (RHD)	Instrument Panel Brace RH
BO	96 (*6)	Under the Driver's Seat
	100 (*7)	
	120 (*15)	Under the Front Passenger's Seat
	124 (*16)	
BT	96 (*6)	Right Quarter Panel Inner
	100 (*7)	
	120 (*15)	
	124 (*16)	

◯ : **Splice Points**

Code	See Page	Wire Harness with Splice Points	Code	See Page	Wire Harness with Splice Points
I7	90 (LHD)	Instrument Panel Wire	I7	114 (RHD)	Instrument Panel Wire

* 1 : LHD 1GR-FE * 2 : LHD 3RZ-FE * 3 : LHD 1KD-FTV * 4 : LHD 1KZ-TE * 5 : LHD 5L-E * 6 : LHD 5-Door * 7 : LHD 3-Door
* 8 : LHD 8Way Power Seat * 9 : LHD Except 8Way Power Seat * 10 : RHD 1GR-FE * 11 : RHD 3RZ-FE * 12 : RHD 1KD-FTV
* 13 : RHD 1KZ-TE * 14 : RHD 5L-E * 15 : RHD 5-Door * 16 : RHD 3-Door * 17 : RHD 8Way Power Seat
* 18 : RHD Except 8Way Power Seat

Headlight Beam Level Control

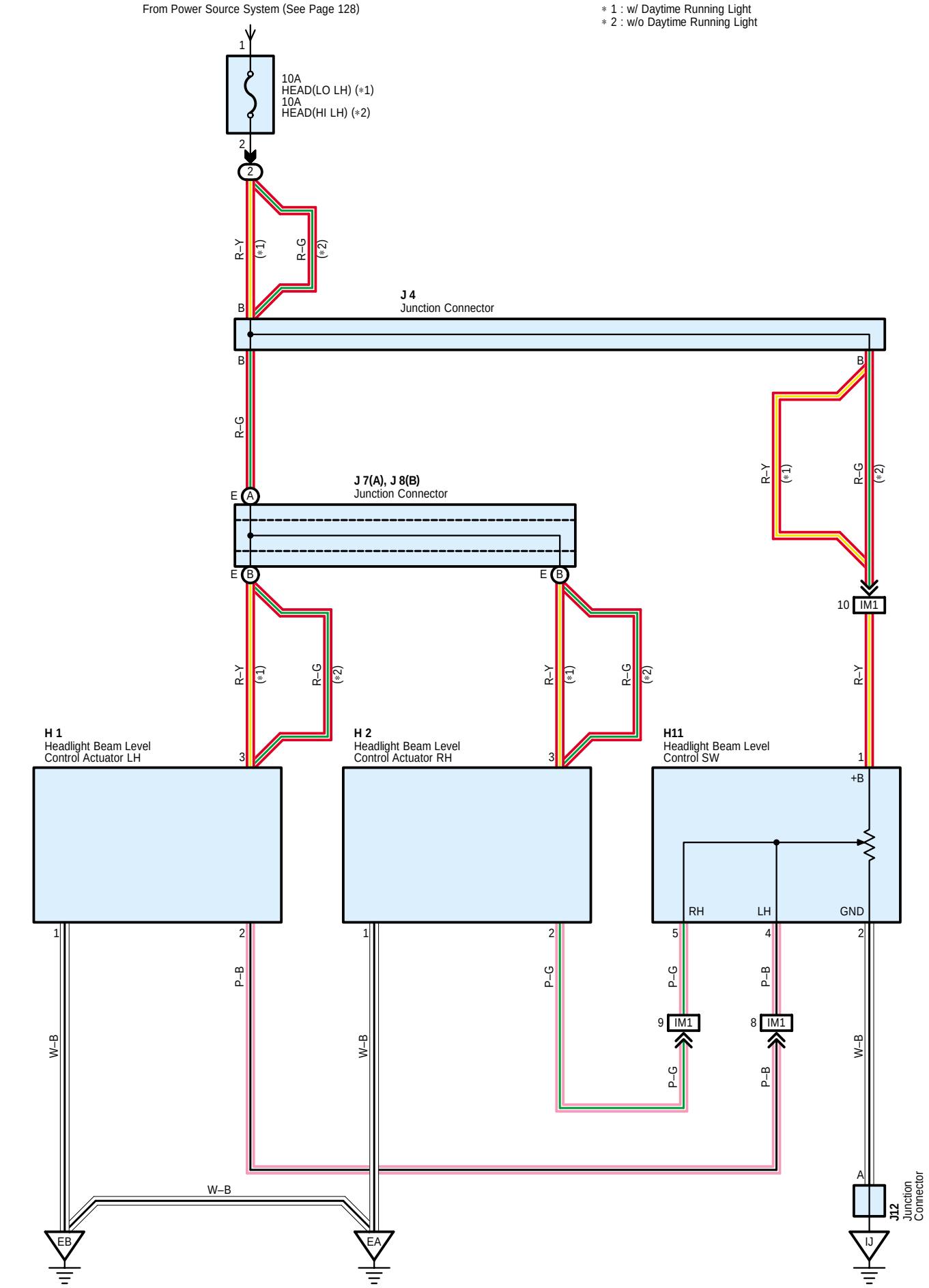

Service Hints

H11 Headlight Beam Level Control SW

1–Ground : Approx. 12 volts with the light control SW at HEAD position
2–Ground : Always continuity

H1, H2 Headlight Beam Level Control Actuator LH, RH

3–Ground : Approx. 12 volts with the light control SW at HEAD position
1–Ground : Always continuity

: Parts Location

Code	See Page	Code	See Page	Code		See Page
H1	39 (*1)	H2	45 (*4)	J4		47 (*5)
	41 (*2)		47 (*5)			59 (*10)
	43 (*3)		59 (*10)			61 (*11)
	45 (*4)		61 (*11)			63 (*12)
	47 (*5)		63 (*12)			65 (*13)
	59 (*10)		65 (*13)			67 (*14)
	61 (*11)		67 (*14)	J7	A	50 (LHD)
	63 (*12)	H11	50 (LHD)			70 (RHD)
	65 (*13)		70 (RHD)	J8	B	50 (LHD)
	67 (*14)	J4	39 (*1)			70 (RHD)
H2	39 (*1)		41 (*2)	J12		50 (LHD)
	41 (*2)		43 (*3)			70 (RHD)
	43 (*3)		45 (*4)			

: Relay Blocks

Code	See Page	Relay Blocks (Relay Block Location)
2	23	Engine Room R/B (Engine Compartment Left)

: Connector Joining Wire Harness and Wire Harness

Code	See Page	Joining Wire Harness and Wire Harness (Connector Location)
IM1	92 (LHD)	Instrument Panel Wire and Engine Room Main Wire (Right Kick Panel)
	116 (RHD)	

* 1 : LHD 1GR–FE * 2 : LHD 3RZ–FE * 3 : LHD 1KD–FTV * 4 : LHD 1KZ–TE * 5 : LHD 5L–E * 6 : LHD 5–Door * 7 : LHD 3–Door
* 8 : LHD 8Way Power Seat * 9 : LHD Except 8Way Power Seat * 10 : RHD 1GR–FE * 11 : RHD 3RZ–FE * 12 : RHD 1KD–FTV
* 13 : RHD 1KZ–TE * 14 : RHD 5L–E * 15 : RHD 5–Door * 16 : RHD 3–Door * 17 : RHD 8Way Power Seat
* 18 : RHD Except 8Way Power Seat

▽ : **Ground Points**

Code	See Page	Ground Points Location
EA	78 (*1)	Front Right Fender
	80 (*2)	
	82 (*3)	
	84 (*4)	
	86 (*5)	
	102 (*10)	
	104 (*11)	
	106 (*12)	
	108 (*13)	
	110 (*14)	
EB	78 (*1)	Front Left Fender
	80 (*2)	
	82 (*3)	
	84 (*4)	
	86 (*5)	
	102 (*10)	
	104 (*11)	
	106 (*12)	
	108 (*13)	
	110 (*14)	
IJ	88 (LHD)	Left Kick Panel
	112 (RHD)	Right Kick Panel

* 1 : LHD 1GR-FE * 2 : LHD 3RZ-FE * 3 : LHD 1KD-FTV * 4 : LHD 1KZ-TE * 5 : LHD 5L-E * 6 : LHD 5-Door * 7 : LHD 3-Door
* 8 : LHD 8Way Power Seat * 9 : LHD Except 8Way Power Seat * 10 : RHD 1GR-FE * 11 : RHD 3RZ-FE * 12 : RHD 1KD-FTV
* 13 : RHD 1KZ-TE * 14 : RHD 5L-E * 15 : RHD 5-Door * 16 : RHD 3-Door * 17 : RHD 8Way Power Seat
* 18 : RHD Except 8Way Power Seat

Headlight Cleaner

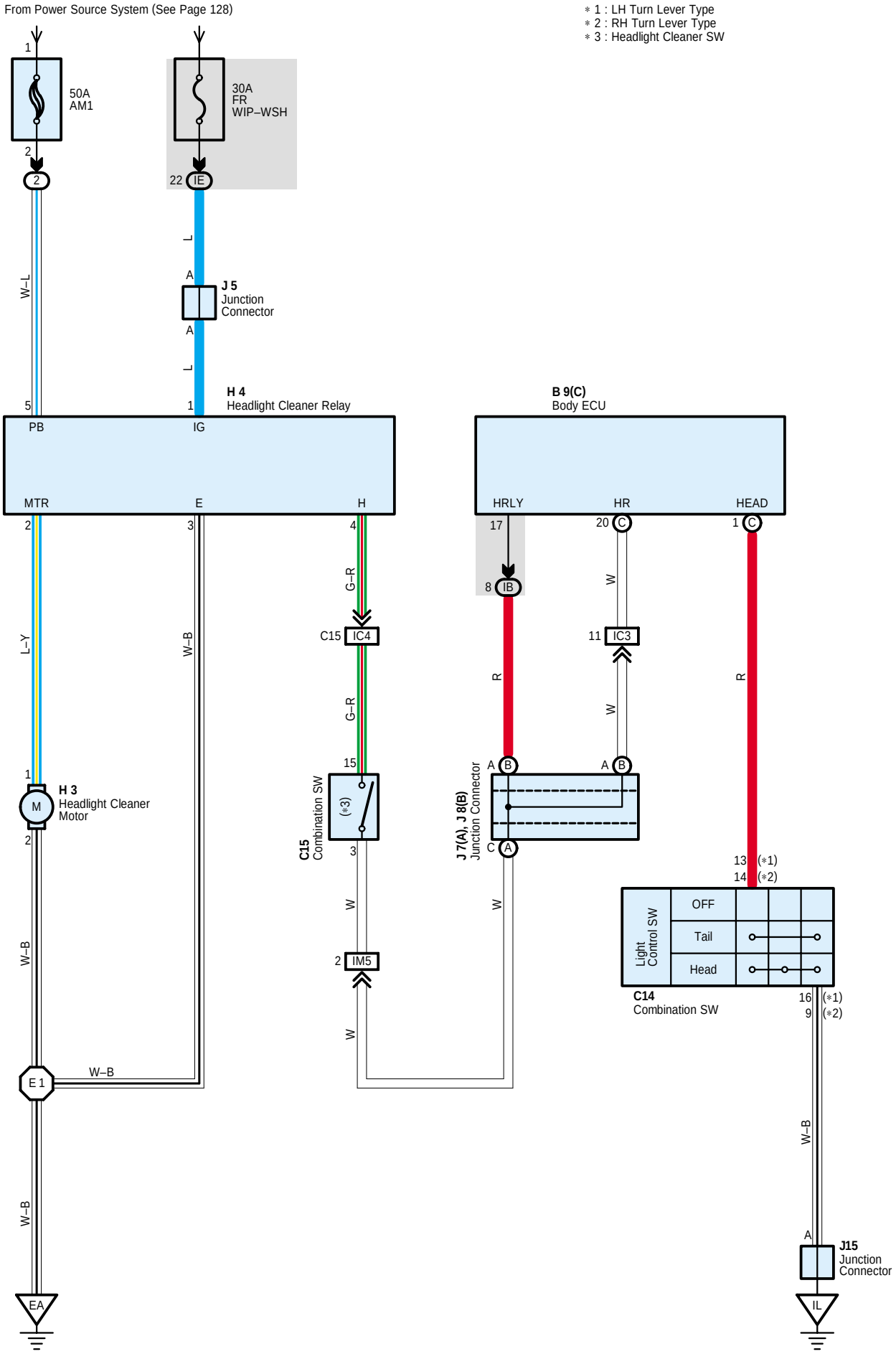

Service Hints

H4 Headlight Cleaner Relay

1–Ground : Approx. 12 volts with the ignition SW at ON position
5–Ground : Always approx. 12 volts
3–Ground : Always continuity

: Parts Location

Code		See Page	Code	See Page	Code		See Page
B9	C	48 (LHD)	H4	39 (*1)	J5		61 (*11)
		68 (RHD)		43 (*3)			63 (*12)
C14		49 (LHD)		59 (*10)			65 (*13)
		69 (RHD)		63 (*12)			67 (*14)
C15		49 (LHD)	J5	39 (*1)	J7	A	50 (LHD)
		69 (RHD)		41 (*2)			70 (RHD)
H3		39 (*1)		43 (*3)	J8	B	50 (LHD)
		43 (*3)		45 (*4)			70 (RHD)
		59 (*10)		47 (*5)	J15		50 (LHD)
		63 (*12)		59 (*10)			70 (RHD)

: Relay Blocks

Code	See Page	Relay Blocks (Relay Block Location)
2	23	Engine Room R/B (Engine Compartment Left)

: Junction Block and Wire Harness Connector

Code	See Page	Junction Block and Wire Harness (Connector Location)
IB	26 (LHD)	Engine Room Main Wire and Driver Side J/B (Lower Finish Panel)
	28 (RHD)	
IE	26 (LHD)	
	28 (RHD)	

: Connector Joining Wire Harness and Wire Harness

Code	See Page	Joining Wire Harness and Wire Harness (Connector Location)
IC3	88 (LHD)	Instrument Panel Wire and Engine Room Main Wire (Left Kick Panel)
	112 (RHD)	
IC4	88 (LHD)	
	112 (RHD)	
IM5	92 (LHD)	Instrument Panel Wire and Engine Room Main Wire (Right Kick Panel)
	116 (RHD)	

* 1 : LHD 1GR–FE * 2 : LHD 3RZ–FE * 3 : LHD 1KD–FTV * 4 : LHD 1KZ–TE * 5 : LHD 5L–E * 6 : LHD 5–Door * 7 : LHD 3–Door
* 8 : LHD 8Way Power Seat * 9 : LHD Except 8Way Power Seat * 10 : RHD 1GR–FE * 11 : RHD 3RZ–FE * 12 : RHD 1KD–FTV
* 13 : RHD 1KZ–TE * 14 : RHD 5L–E * 15 : RHD 5–Door * 16 : RHD 3–Door * 17 : RHD 8Way Power Seat
* 18 : RHD Except 8Way Power Seat

▽ : **Ground Points**

Code	See Page	Ground Points Location
EA	78 (*1)	Front Right Fender
	80 (*2)	
	82 (*3)	
	84 (*4)	
	86 (*5)	
	102 (*10)	
	104 (*11)	
	106 (*12)	
	108 (*13)	
	110 (*14)	
IL	88 (LHD)	Near the Right Side of Steering Column
	112 (RHD)	Instrument Panel Brace RH

◯ : **Splice Points**

Code	See Page	Wire Harness with Splice Points	Code	See Page	Wire Harness with Splice Points
E1	78 (*1)	Engine Room Main Wire	E1	102 (*10)	Engine Room Main Wire
	80 (*2)			104 (*11)	
	82 (*3)			106 (*12)	
	84 (*4)			108 (*13)	
	86 (*5)			110 (*14)	

* 1 : LHD 1GR-FE * 2 : LHD 3RZ-FE * 3 : LHD 1KD-FTV * 4 : LHD 1KZ-TE * 5 : LHD 5L-E * 6 : LHD 5-Door * 7 : LHD 3-Door
* 8 : LHD 8Way Power Seat * 9 : LHD Except 8Way Power Seat * 10 : RHD 1GR-FE * 11 : RHD 3RZ-FE * 12 : RHD 1KD-FTV
* 13 : RHD 1KZ-TE * 14 : RHD 5L-E * 15 : RHD 5-Door * 16 : RHD 3-Door * 17 : RHD 8Way Power Seat
* 18 : RHD Except 8Way Power Seat

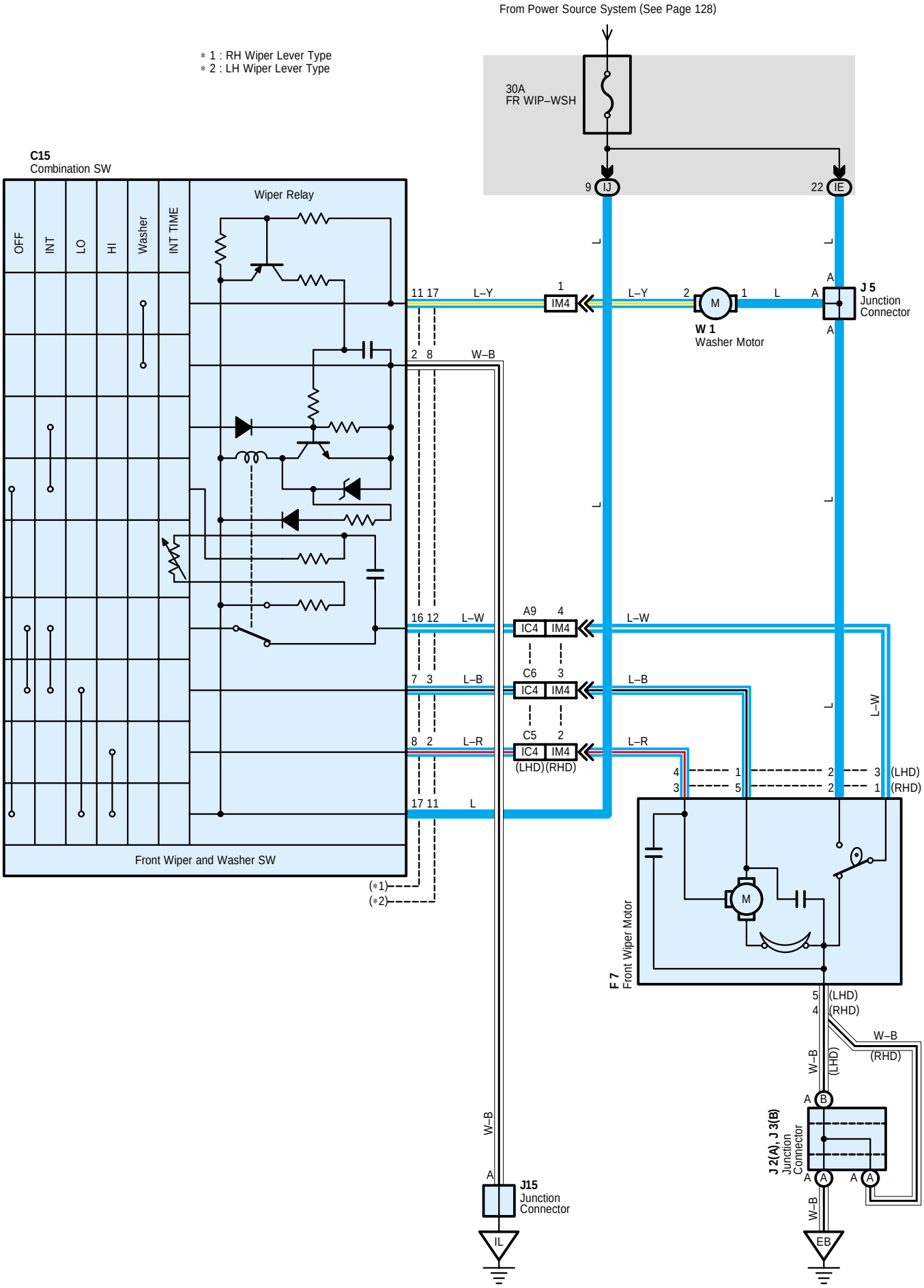
From Power Source System (See Page 128)
∗ 1 : RH Wiper Lever Type
∗ 2 : LH Wiper Lever Type
30A
FR WIP–WSH
9 IJ
22 IE
C15
Combination SW
OFF
INT
LO
HI
Washer
INT TIME
Wiper Relay
Front Wiper and Washer SW
11 17
L–Y
1
IM4
L–Y
2
M
1
L
A
J 5
Junction
Connector
A
W 1
Washer Motor
2 8
W–B
16 12
L–W
A9
4
IC4
IM4
L–W
7 3
L–B
C6
3
IC4
IM4
L–B
8 2
L–R
C5
2
IC4
IM4
L–R
(LHD)(RHD)
17 11
L
L
L–W
4
1
2
3 (LHD)
3
5
2
1 (RHD)
(∗1)
(∗2)
M
F 7
Front Wiper Motor
5 (LHD)
4 (RHD)
W–B
(RHD)
W–B
(LHD)
A B
J 2(A), J 3(B)
Junction
Connector
A A
A A
W–B
W–B
A
J15
Junction
Connector
IL
EB

System Outline

With the ignition SW turned on, the current flows to TERMINAL 17 (RH wiper lever type), 11 (LH wiper lever type) of the wiper and washer SW, TERMINAL 1 of the washer motor and TERMINAL 2 of the front wiper motor through the FR WIP–WSH fuse.

1. Low Speed Position

With the wiper and washer SW turned to LO position, the current flows from TERMINAL 17 (RH wiper lever type), 11 (LH wiper lever type) of the wiper and washer SW to TERMINAL 7 (RH wiper lever type), 3 (LH wiper lever type) to TERMINAL 1 (LHD), 5 (RHD) of the front wiper motor to TERMINAL 5 (LHD), 4 (RHD) to GROUND and causes the front wiper motor to run at low speed.

2. High Speed Position

With the wiper and washer SW turned to HI position, the current flows from TERMINAL 17 (RH wiper lever type), 11 (LH wiper lever type) of the wiper and washer SW to TERMINAL 8 (RH wiper lever type), 2 (LH wiper lever type) to TERMINAL 4 (LHD), 3 (RHD) of the front wiper motor to TERMINAL 5 (LHD), 4 (RHD) to GROUND and causes the front wiper motor to run at high speed.

3. INT Position

With the wiper and washer SW turned to INT position, the wiper relay operates and current flows from TERMINAL 17 (RH wiper lever type), 11 (LH wiper lever type) of the wiper and washer SW to TERMINAL 2 (RH wiper lever type), 8 (LH wiper lever type) to GROUND. This activates the intermittent circuit and the current flows from TERMINAL 17 (RH wiper lever type), 11 (LH wiper lever type) of the wiper and washer SW to TERMINAL 7 (RH wiper lever type), 3 (LH wiper lever type) to TERMINAL 1 (LHD), 5 (RHD) of the front wiper motor to TERMINAL 5 (LHD), 4 (RHD) to GROUND and the wiper operates. Intermittent operation is controlled by a condenser charge and discharge function in the relay.

4. Washer Interlocking Operation

With the wiper and washer SW pulled to washer position (Washer SW ON position), the current flows from the FR WIP–WSH fuse to TERMINAL 1 of the washer motor to TERMINAL 2 to TERMINAL 11 (RH wiper lever type), 17 (LH wiper lever type) of the wiper and washer SW to TERMINAL 2 (RH wiper lever type), 8 (LH wiper lever type) to GROUND and causes the washer motor to run and the window washer to spray. Simultaneously, current flows from the FR WIP–WSH fuse to TERMINAL 17 (RH wiper lever type), 11 (LH wiper lever type) of the wiper and washer SW to TERMINAL 7 (RH wiper lever type), 11 (LH wiper lever type) to TERMINAL 1 (LHD), 5 (RHD) of the front wiper motor to TERMINAL 5 (LHD), 4 (RHD) to GROUND, causing the wiper to function.

Service Hints

C15 Combination SW

2 (RH wiper lever type), 8 (LH wiper lever type)–Ground :	Always continuity
17 (RH wiper lever type), 11 (LH wiper lever type)–Ground :	Approx. 12 volts with the ignition SW at ON position
7 (RH wiper lever type), 3 (LH wiper lever type)–Ground :	Approx. 12 volts with the ignition SW on and the wiper and washer SW at LO position Approx. 12 volts every approx. 1 to 10 seconds intermittently with the ignition SW on and the wiper and washer SW at INT position
16 (RH wiper lever type), 12 (LH wiper lever type)–Ground :	Approx. 12 volts with the ignition SW on and unless the front wiper motor at STOP position
8 (RH wiper lever type), 2 (LH wiper lever type)–Ground :	Approx. 12 volts with the ignition SW on and the wiper and washer SW at HI position

F7 Front Wiper Motor

2–3 (LHD), 2–1 (RHD) : Closed unless the front wiper motor at STOP position

○ : **Parts Location**

Code	See Page	Code	See Page	Code	See Page
C15	49 (LHD)	J2 A	59 (*10)	J5	63 (*12)
	69 (RHD)		61 (*11)		65 (*13)
F7	38 (*1)		63 (*12)		67 (*14)
	40 (*2)		65 (*13)	J15	50 (LHD)
	42 (*3)		67 (*14)		70 (RHD)
	44 (*4)	J3 B	39 (*1)	W1	39 (*1)
	46 (*5)		41 (*2)		41 (*2)
	58 (*10)		43 (*3)		43 (*3)
	60 (*11)		45 (*4)		45 (*4)
	62 (*12)		47 (*5)		47 (*5)
	64 (*13)	J5	39 (*1)		59 (*10)
	66 (*14)		41 (*2)		61 (*11)
J2 A	39 (*1)		43 (*3)		63 (*12)
	41 (*2)		45 (*4)		65 (*13)
	43 (*3)		47 (*5)		67 (*14)
	45 (*4)		59 (*10)		
	47 (*5)		61 (*11)		

: **Junction Block and Wire Harness Connector**

Code	See Page	Junction Block and Wire Harness (Connector Location)
IE	26 (LHD)	Engine Room Main Wire and Driver Side J/B (Lower Finish Panel)
	28 (RHD)	
IJ	27 (LHD)	Instrument Panel Wire and Driver Side J/B (Lower Finish Panel)
	29 (RHD)	

: **Connector Joining Wire Harness and Wire Harness**

Code	See Page	Joining Wire Harness and Wire Harness (Connector Location)
IC4	88 (LHD)	Instrument Panel Wire and Engine Room Main Wire (Left Kick Panel)
IM4	116 (RHD)	Instrument Panel Wire and Engine Room Main Wire (Right Kick Panel)

: **Ground Points**

Code	See Page	Ground Points Location
EB	78 (*1)	Front Left Fender
	80 (*2)	
	82 (*3)	
	84 (*4)	
	86 (*5)	
	102 (*10)	
	104 (*11)	
	106 (*12)	
	108 (*13)	
	110 (*14)	
IL	88 (LHD)	Near the Right Side of Steering Column
	112 (RHD)	Instrument Panel Brace RH

* 1 : LHD 1GR-FE * 2 : LHD 3RZ-FE * 3 : LHD 1KD-FTV * 4 : LHD 1KZ-TE * 5 : LHD 5L-E * 6 : LHD 5-Door * 7 : LHD 3-Door
* 8 : LHD 8Way Power Seat * 9 : LHD Except 8Way Power Seat * 10 : RHD 1GR-FE * 11 : RHD 3RZ-FE * 12 : RHD 1KD-FTV
* 13 : RHD 1KZ-TE * 14 : RHD 5L-E * 15 : RHD 5-Door * 16 : RHD 3-Door * 17 : RHD 8Way Power Seat
* 18 : RHD Except 8Way Power Seat

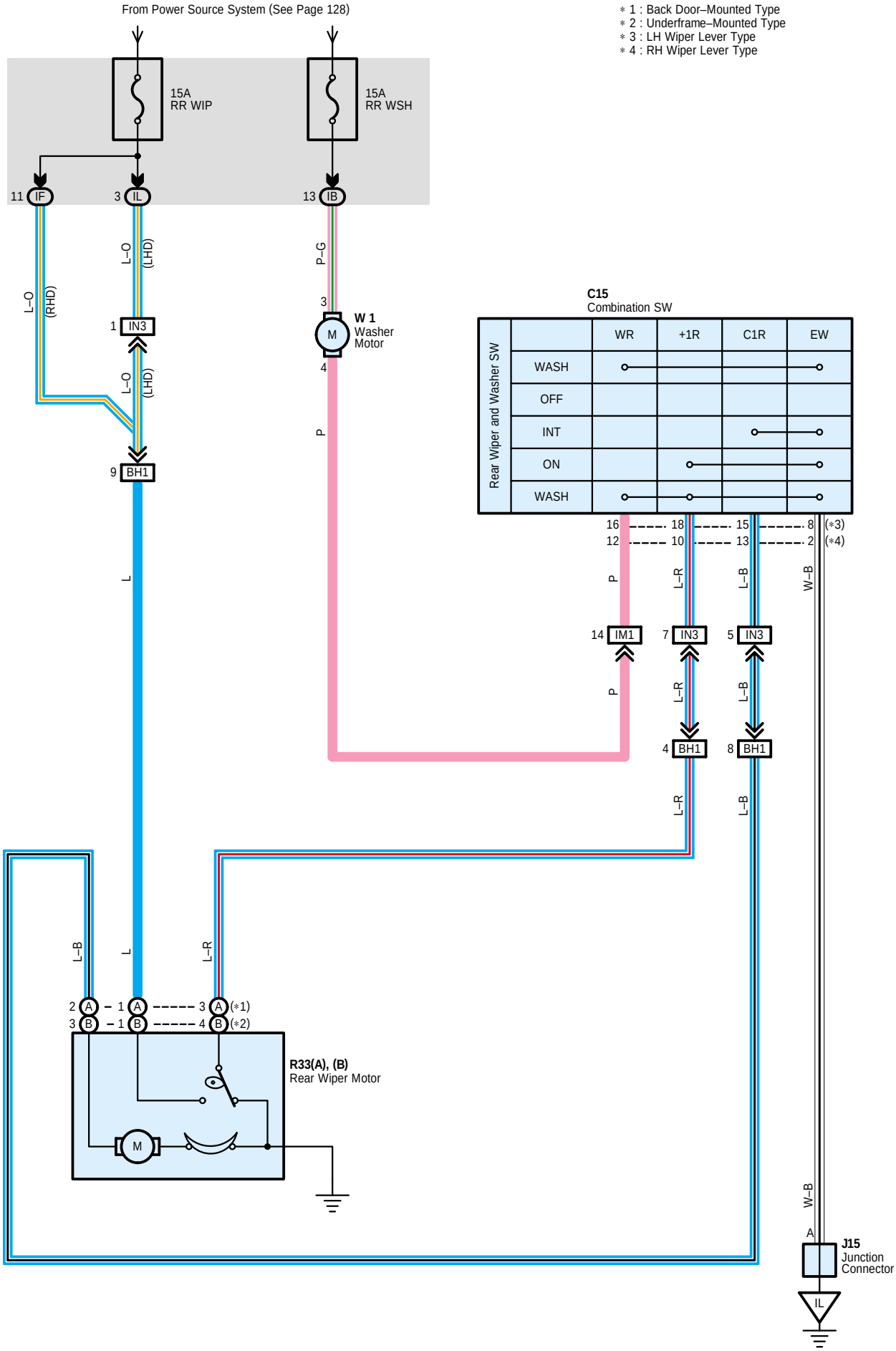
From Power Source System (See Page 128)
* 1 : Back Door–Mounted Type
* 2 : Underframe–Mounted Type
* 3 : LH Wiper Lever Type
* 4 : RH Wiper Lever Type
15A
RR WIP
15A
RR WSH
11 IF
3 IL
13 IB
L–O (LHD)
L–O (RHD)
P–G
1 IN3
3
W 1
Washer
Motor
4
P
9 BH1
C15
Combination SW
Rear Wiper and Washer SW
WR
+1R
C1R
EW
WASH
OFF
INT
ON
WASH
16
12
18
10
15
13
8 (*3)
2 (*4)
L
P
L–R
L–B
W–B
14 IM1
7 IN3
5 IN3
4 BH1
8 BH1
L–B
L
L–R
2 A
3 B
1 A
1 B
3 A (*1)
4 B (*2)
R33(A), (B)
Rear Wiper Motor
M
W–B
A
J15
Junction
Connector
IL

Service Hints

C15 Combination SW

8 (LH wiper lever type), 2 (RH wiper lever type)–Ground : Continuity with the rear wiper SW at ON position
15 (LH wiper lever type), 13 (RH wiper lever type)–Ground : Continuity with the rear wiper SW at INT position
18 (LH wiper lever type), 10 (RH wiper lever type)–Ground : Always continuity

: Parts Location

Code		See Page	Code		See Page	Code	See Page
C15		49 (LHD)	R33	B	53 (*6)	W1	47 (*5)
		69 (RHD)			55 (*7)		59 (*10)
J15		50 (LHD)			73 (*15)		61 (*11)
		70 (RHD)			75 (*16)		63 (*12)
R33	A	53 (*6)	W1		39 (*1)		65 (*13)
		55 (*7)			41 (*2)		67 (*14)
		73 (*15)			43 (*3)		
		75 (*16)			45 (*4)		

: Junction Block and Wire Harness Connector

Code	See Page	Junction Block and Wire Harness (Connector Location)
IB	26 (LHD)	Engine Room Main Wire and Driver Side J/B (Lower Finish Panel)
	28 (RHD)	
IF	28 (RHD)	Floor Wire and Driver Side J/B (Lower Finish Panel)
IL	27 (LHD)	Instrument Panel Wire and Driver Side J/B (Lower Finish Panel)

: Connector Joining Wire Harness and Wire Harness

Code	See Page	Joining Wire Harness and Wire Harness (Connector Location)
IM1	92 (LHD)	Instrument Panel Wire and Engine Room Main Wire (Right Kick Panel)
	116 (RHD)	
IN3	94 (LHD)	Instrument Panel Wire and Floor Wire (Right Kick Panel)
	118 (RHD)	
BH1	98 (*6)	Back Door No.1 Wire and Floor Wire (Right Quarter Panel Inner)
	100 (*7)	
	122 (*15)	
	124 (*16)	

: Ground Points

Code	See Page	Ground Points Location
IL	88 (LHD)	Near the Right Side of Steering Column
	112 (RHD)	Instrument Panel Brace RH

* 1 : LHD 1GR–FE * 2 : LHD 3RZ–FE * 3 : LHD 1KD–FTV * 4 : LHD 1KZ–TE * 5 : LHD 5L–E * 6 : LHD 5–Door * 7 : LHD 3–Door
* 8 : LHD 8Way Power Seat * 9 : LHD Except 8Way Power Seat * 10 : RHD 1GR–FE * 11 : RHD 3RZ–FE * 12 : RHD 1KD–FTV
* 13 : RHD 1KZ–TE * 14 : RHD 5L–E * 15 : RHD 5–Door * 16 : RHD 3–Door * 17 : RHD 8Way Power Seat
* 18 : RHD Except 8Way Power Seat

Power Window (LHD w/ Jam Protection)

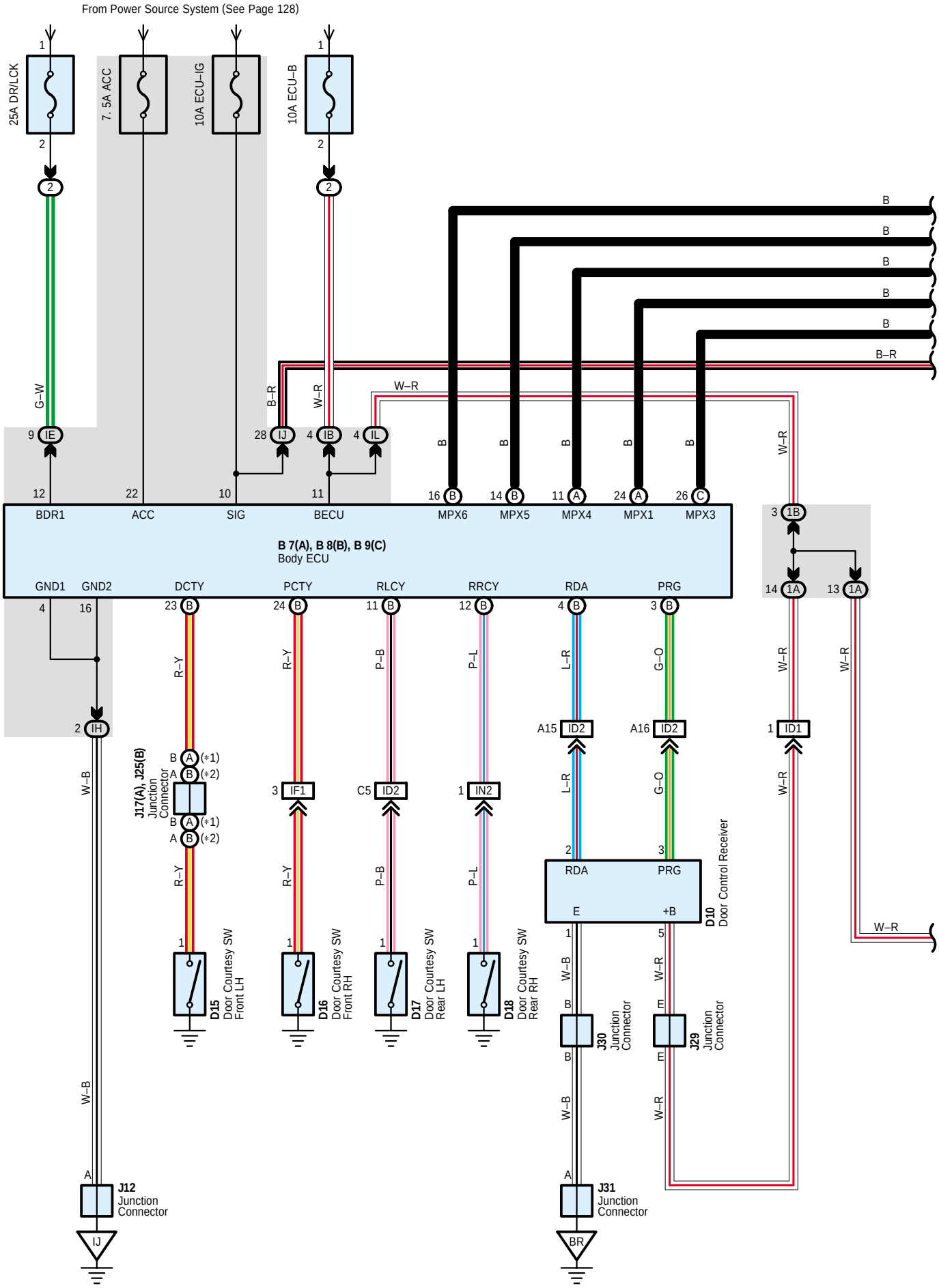

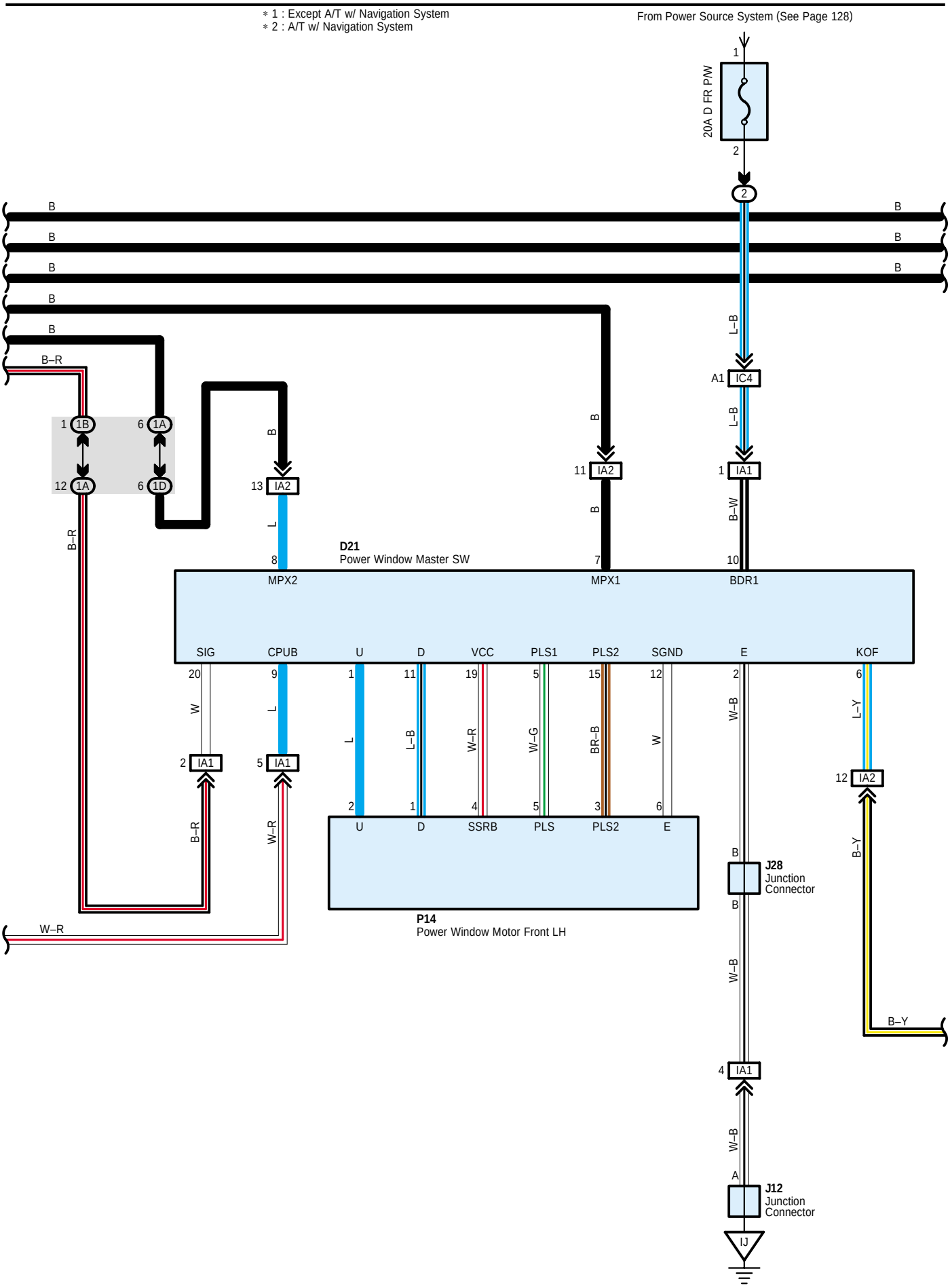
* 1 : Except A/T w/ Navigation System
* 2 : A/T w/ Navigation System
From Power Source System (See Page 128)
20A D FR P/W
D21
Power Window Master SW
MPX2
MPX1
BDR1
SIG
CPUB
U
D
VCC
PLS1
PLS2
SGND
E
KOF
P14
Power Window Motor Front LH
SSRB
PLS
J28
Junction Connector
J12
Junction Connector
IC4
IA1
IA2
1B
1A
1D
IJ

Power Window (LHD w/ Jam Protection)

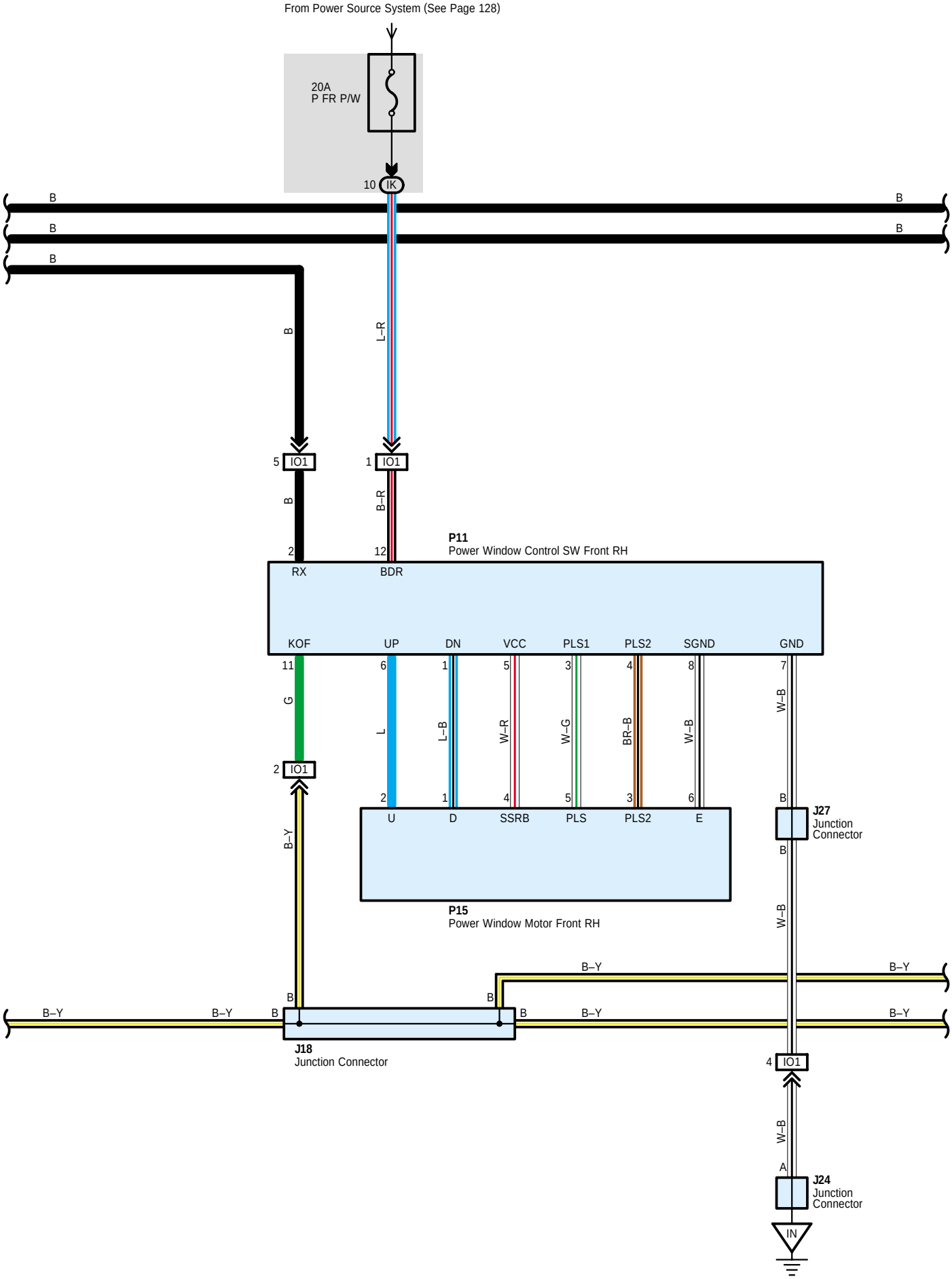

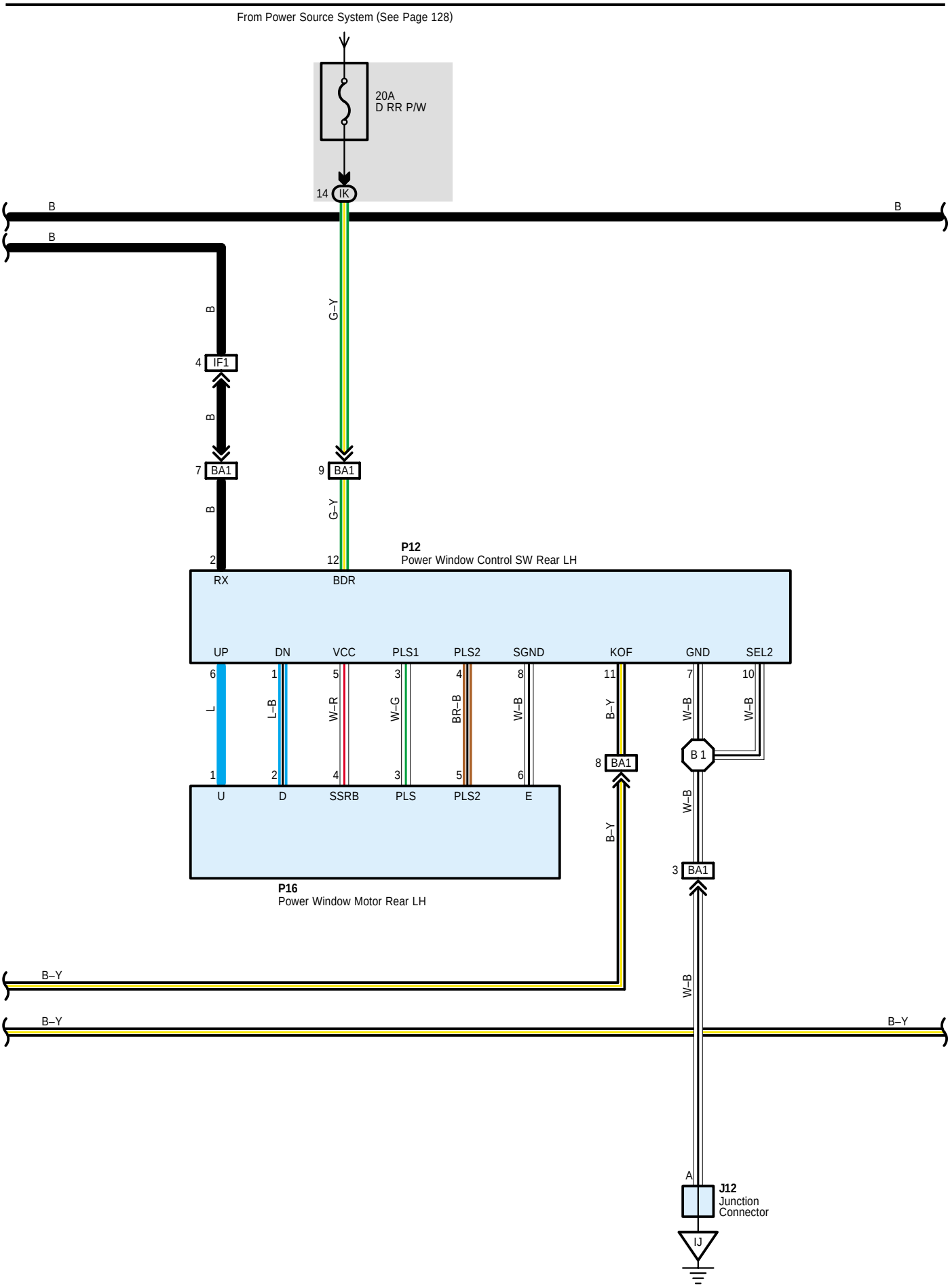
From Power Source System (See Page 128)
20A
D RR P/W
14 IK
B
B
B
B
G–Y
4 IF1
B
7 BA1
9 BA1
B
G–Y
2
12
P12
Power Window Control SW Rear LH
RX
BDR
UP
DN
VCC
PLS1
PLS2
SGND
KOF
GND
SEL2
6
1
5
3
4
8
11
7
10
L
L–B
W–R
W–G
BR–B
W–B
B–Y
W–B
W–B
8 BA1
B 1
1
2
4
3
5
6
U
D
SSRB
PLS
PLS2
E
W–B
B–Y
3 BA1
P16
Power Window Motor Rear LH
B–Y
W–B
B–Y
B–Y
A
J12
Junction
Connector
IJ

Power Window (LHD w/ Jam Protection)

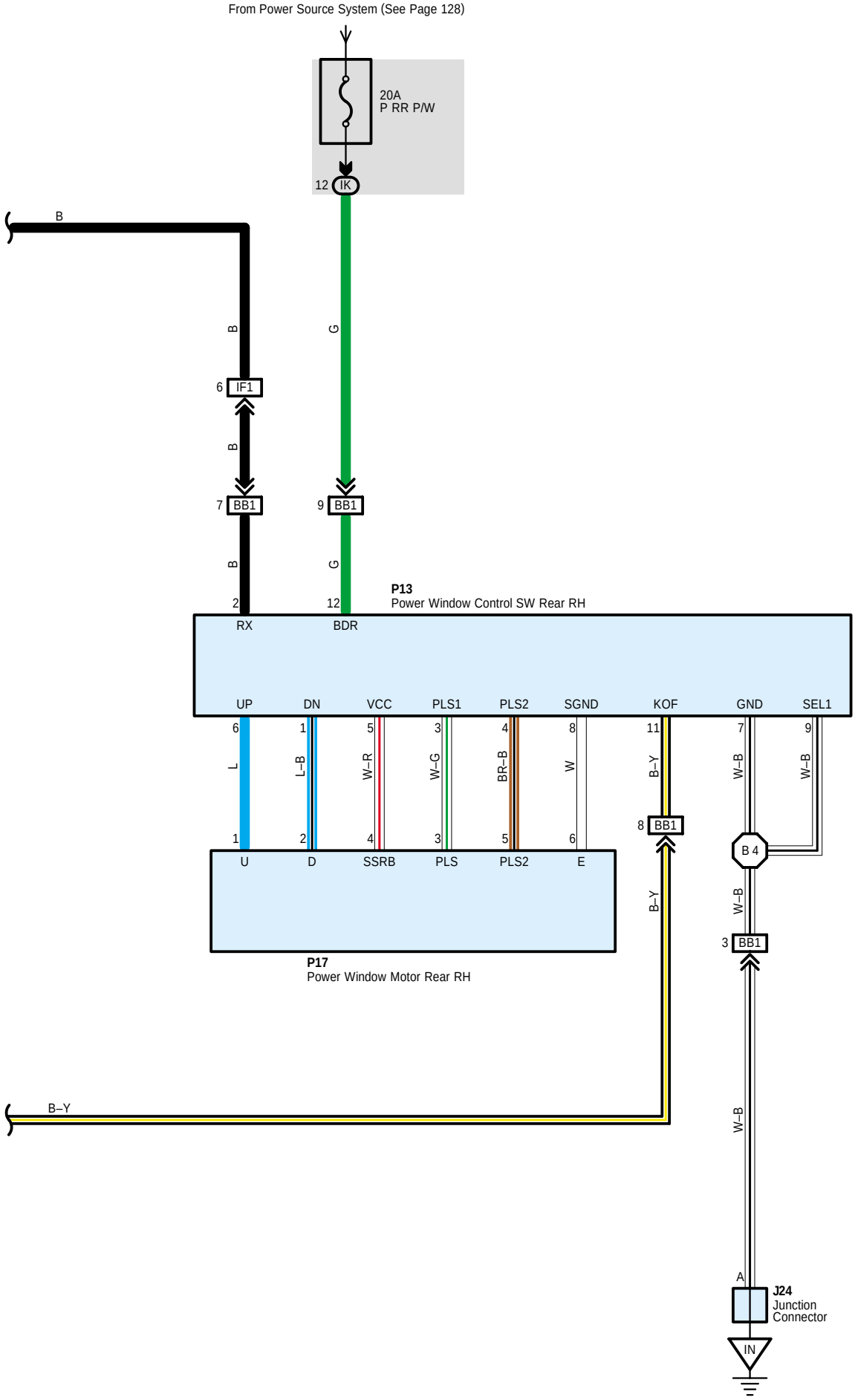

System Outline

∗ The power window system is controlled by the body ECU. This system has following features.

1. Manual Up and Down Function

This function causes the window to open or close while the power window switch is being pulled halfway up or pushed halfway down. The window stops as soon as the switch is released.

2. One-Touch Auto Up and Down Function

The all doors one-touch auto up and down function enables the window of front doors to be fully opened or closed at a touch of the power window switch.

3. Jam Protection Function

A jam protection function automatically stops the power window and moves it downward if a foreign object gets jammed in the window during one-touch auto-up operation.

4. Remote Control Function

The up and down operations of the front passenger door window and the rear door windows can be controlled by operating the power window master switch.

5. Ker-Off Operation Function

The driver's door key-off operation function makes it possible to operate the power window for approximately 45 seconds after the ignition switch is turned to the ACC or LOCK position, if the front doors are not opened.

∗ When the battery terminal or fuse is disconnected, the glass position of all doors have to be reset to the initial positions, door by door, by the power window control switch in accordance with the following procedure:

A) Reconnect the battery terminal or fuse.

B) Turn ON the ignition switch.

C) Lower the window of each door by the power window switch to open it halfway or more.

D) Then move the window up by the power window switch to close it fully.
Do not release the switch for at least one second after the window is fully closed.

Service Hints

Body ECU

22-Ground : Approx. 12 volts with ignition SW at ACC or ON position
11, 12-Ground : Always approx. 12 volts
10-Ground : Approx. 12 volts with ignition SW at ON position
4, 16-Ground : Always continuity

D21 Power Window Master SW

9, 10-Ground : Always approx. 12 volts
20-Ground : Approx. 12 volts with ignition SW at ON position
2-Ground : Always continuity

P11 Power Window Control SW Front RH

12-Ground : Always approx. 12 volts
7-Ground : Always continuity

P12 Power Window Control SW Rear LH

12-Ground : Always approx. 12 volts
7, 10-Ground : Always continuity

P13 Power Window Control SW Rear RH

12-Ground : Always approx. 12 volts
7, 9-Ground : Always continuity

Power Window (LHD w/ Jam Protection)

: Parts Location

Code		See Page	Code		See Page	Code	See Page
B7	A	48 (LHD)	J12		50 (LHD)	J31	52 (*6)
B8	B	48 (LHD)	J17	A	50 (LHD)		54 (*7)
B9	C	48 (LHD)	J18		50 (LHD)	P11	53 (*6)
D10		52 (*6)	J24		50 (LHD)		55 (*7)
		54 (*7)	J25	B	50 (LHD)	P12	53 (*6)
D15		52 (*6)	J27		52 (*6)	P13	53 (*6)
		54 (*7)			54 (*7)	P14	53 (*6)
D16		52 (*6)	J28		52 (*6)		55 (*7)
		54 (*7)			54 (*7)	P15	53 (*6)
D17		52 (*6)	J29		52 (*6)		55 (*7)
D18		52 (*6)			54 (*7)	P16	53 (*6)
D21		52 (*6)	J30		52 (*6)	P17	53 (*6)
		54 (*7)			54 (*7)		

: Relay Blocks

Code	See Page	Relay Blocks (Relay Block Location)
2	23	Engine Room R/B (Engine Compartment Left)

: Junction Block and Wire Harness Connector

Code	See Page	Junction Block and Wire Harness (Connector Location)
IB	26 (LHD)	Engine Room Main Wire and Driver Side J/B (Lower Finish Panel)
IE		
IH	27 (LHD)	Instrument Panel Wire and Driver Side J/B (Lower Finish Panel)
IJ		
IK		
IL		
1A	32 (LHD)	Instrument Panel Wire and J/B No.1 (Instrument Panel Reinforcement Left)
1B		
1D		

: Connector Joining Wire Harness and Wire Harness

Code	See Page	Joining Wire Harness and Wire Harness (Connector Location)
IA1	88 (LHD)	Front Door LH Wire and Instrument Panel Wire (Left Kick Panel)
IA2		
IC4	88 (LHD)	Instrument Panel Wire and Engine Room Main Wire (Left Kick Panel)
ID1	90 (LHD)	Instrument Panel Wire and Floor No.2 Wire (Left Kick Panel)
ID2		
IF1	90 (LHD)	Instrument Panel Wire and Instrument Panel Wire (Near the J/B No.1)
IN2	94 (LHD)	Instrument Panel Wire and Floor Wire (Right Kick Panel)
IO1	94 (LHD)	Front Door RH Wire and Instrument Panel Wire (Right Kick Panel)
BA1	96 (*6)	Rear Door LH Wire and Instrument Panel Wire (Center Pillar LH)
BB1	96 (*6)	Rear Door RH Wire and Instrument Panel Wire (Center Pillar RH)

* 1 : LHD 1GR-FE * 2 : LHD 3RZ-FE * 3 : LHD 1KD-FTV * 4 : LHD 1KZ-TE * 5 : LHD 5L-E * 6 : LHD 5-Door * 7 : LHD 3-Door
* 8 : LHD 8Way Power Seat * 9 : LHD Except 8Way Power Seat * 10 : RHD 1GR-FE * 11 : RHD 3RZ-FE * 12 : RHD 1KD-FTV
* 13 : RHD 1KZ-TE * 14 : RHD 5L-E * 15 : RHD 5-Door * 16 : RHD 3-Door * 17 : RHD 8Way Power Seat
* 18 : RHD Except 8Way Power Seat

▽ : **Ground Points**

Code	See Page	Ground Points Location
IJ	88 (LHD)	Left Kick Panel
IN	88 (LHD)	Right Kick Panel
BR	96 (*6)	Left Quarter Panel Inner
	100 (*7)	

⬡ : **Splice Points**

Code	See Page	Wire Harness with Splice Points	Code	See Page	Wire Harness with Splice Points
B1	98 (*6)	Rear Door No.1 Wire LH	B4	98 (*6)	Rear Door No.1 Wire RH

* 1 : LHD 1GR-FE * 2 : LHD 3RZ-FE * 3 : LHD 1KD-FTV * 4 : LHD 1KZ-TE * 5 : LHD 5L-E * 6 : LHD 5-Door * 7 : LHD 3-Door
* 8 : LHD 8Way Power Seat * 9 : LHD Except 8Way Power Seat * 10 : RHD 1GR-FE * 11 : RHD 3RZ-FE * 12 : RHD 1KD-FTV
* 13 : RHD 1KZ-TE * 14 : RHD 5L-E * 15 : RHD 5-Door * 16 : RHD 3-Door * 17 : RHD 8Way Power Seat
* 18 : RHD Except 8Way Power Seat

Power Window (LHD w/o Jam Protection)

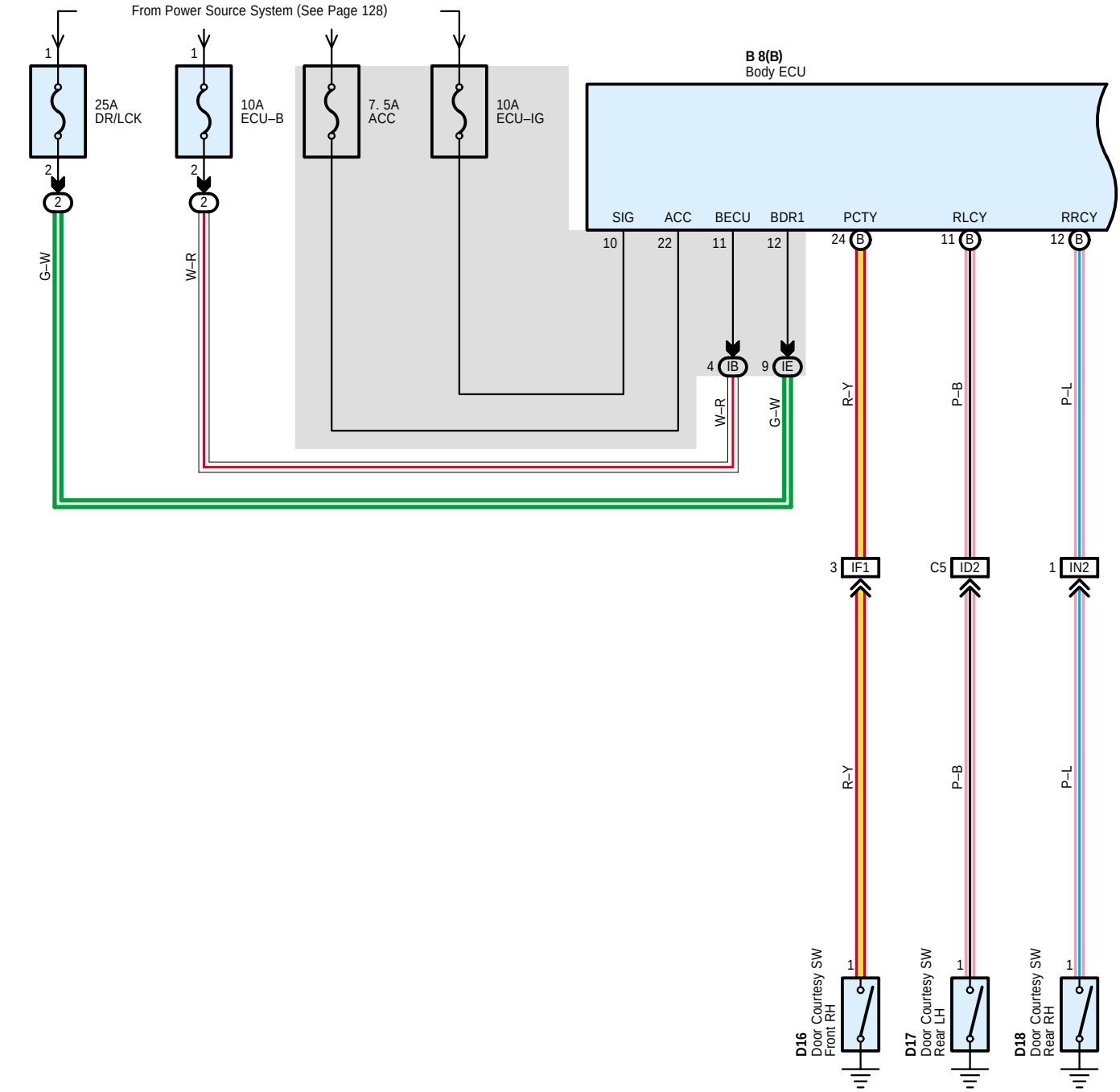

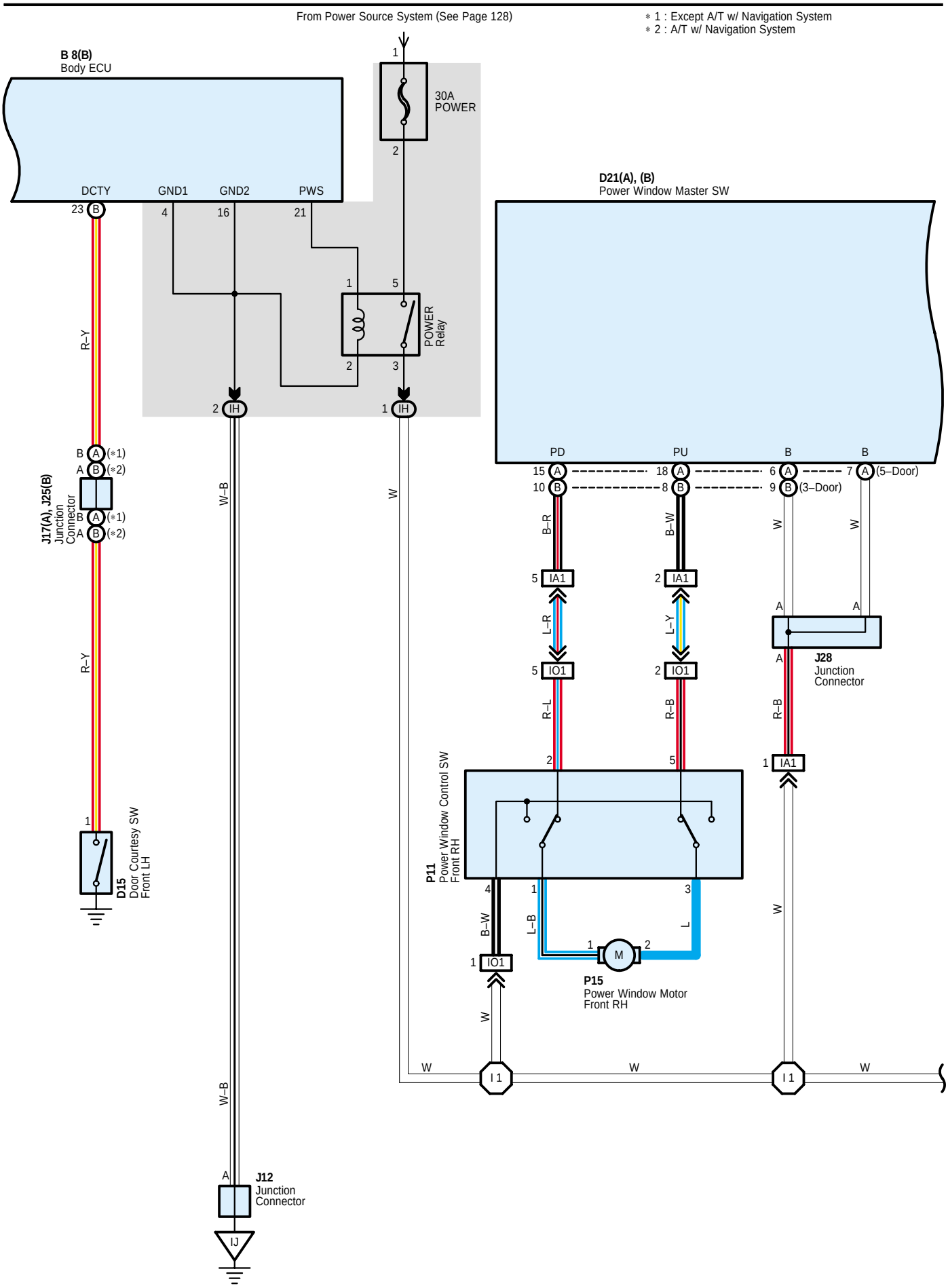
From Power Source System (See Page 128)
∗1 : Except A/T w/ Navigation System
∗2 : A/T w/ Navigation System
B 8(B)
Body ECU
DCTY
GND1
GND2
PWS
30A
POWER
POWER
Relay
D21(A), (B)
Power Window Master SW
PD
PU
B
(5–Door)
(3–Door)
J17(A), J25(B)
Junction
Connector
D15
Door Courtesy SW
Front LH
P11
Power Window Control SW
Front RH
P15
Power Window Motor
Front RH
J28
Junction
Connector
J12
Junction
Connector
R–Y
W–B
W
B–R
B–W
L–R
L–Y
R–L
R–B
L–B
L
IA1
IO1
IH
I1
IJ
M

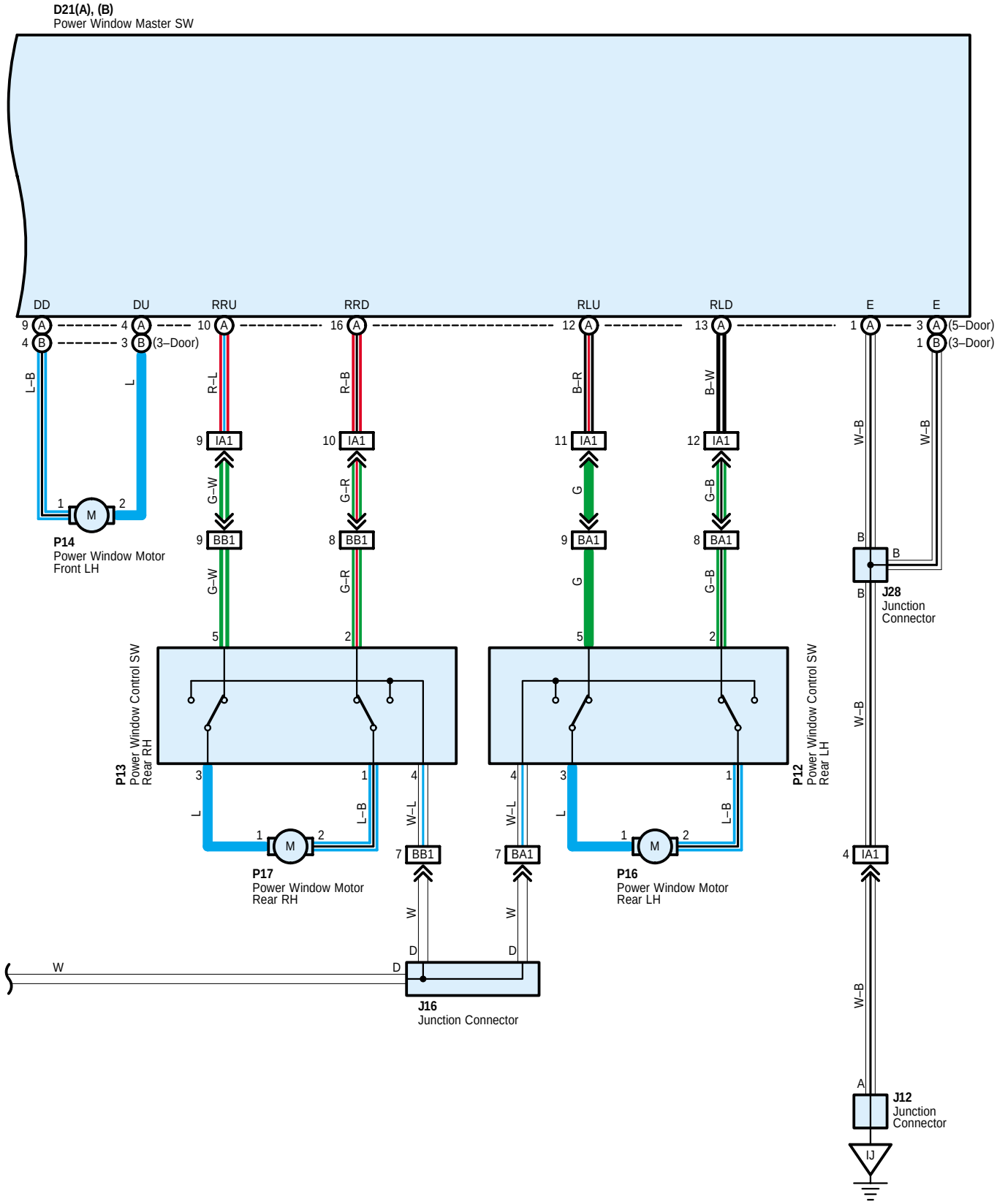
D21(A), (B)
Power Window Master SW
DD
DU
RRU
RRD
RLU
RLD
E
E
(5–Door)
(3–Door)
L–B
L
R–L
R–B
B–R
B–W
W–B
IA1
G–W
G–R
G
G–B
BB1
BA1
P14
Power Window Motor
Front LH
J28
Junction
Connector
P13
Power Window Control SW
Rear RH
P12
Power Window Control SW
Rear LH
W–L
P17
Power Window Motor
Rear RH
P16
Power Window Motor
Rear LH
W
J16
Junction Connector
J12
Junction
Connector
IJ

System Outline

∗ The power window system is controlled by the body ECU. This system has following features.

1. Manual Up and Down Function

This function causes the window to open or close while the power window switch is being pulled halfway up or pushed halfway down. The window stops as soon as the switch is released.

2. Driver's Door One-Touch Auto Up and Down Function

The driver's door one-touch auto down function enables the window of front doors to be fully opened at a touch of the power window switch.

3. Remote Control Function

The up and down operations of the front passenger door window and the rear door windows can be controlled by operating the power window master switch.

4. Ker-Off Operation Function

The driver's door key-off operation function makes it possible to operate the power window for approximately 45 seconds after the ignition switch is turned to the ACC or LOCK position, if the front doors are not opened.

∗ When the battery terminal or fuse is disconnected, the glass position of all doors have to be reset to the initial positions, door by door, by the power window control switch in accordance with the following procedure:

A) Reconnect the battery terminal or fuse.

B) Turn ON the ignition switch.

C) Lower the window of each door by the power window switch to open it halfway or more.

D) Then move the window up by the power window switch to close it fully.
Do not release the switch for at least one second after the window is fully closed.

Service Hints

Body ECU

22-Ground : Approx. 12 volts with ignition SW at ACC or ON position
11, 12-Ground : Always approx. 12 volts
10-Ground : Approx. 12 volts with ignition SW at ON position
4, 16-Ground : Always continuity

○ : Parts Location

Code		See Page	Code		See Page	Code	See Page
B8	B	48 (LHD)	J12		50 (LHD)	P13	53 (*6)
D15		52 (*6)	J16		50 (LHD)	P14	53 (*6)
		54 (*7)	J17	A	50 (LHD)		55 (*7)
D16		52 (*6)	J25	B	50 (LHD)	P15	53 (*6)
		54 (*7)	J28		52 (*6)		55 (*7)
D17		52 (*6)			54 (*7)	P16	53 (*6)
D18		52 (*6)	P11		53 (*6)	P17	53 (*6)
D21	A	52 (*6)			55 (*7)		
	B	54 (*7)	P12		53 (*6)		

▭ : Relay Blocks

Code	See Page	Relay Blocks (Relay Block Location)
2	23	Engine Room R/B (Engine Compartment Left)

* 1 : LHD 1GR-FE * 2 : LHD 3RZ-FE * 3 : LHD 1KD-FTV * 4 : LHD 1KZ-TE * 5 : LHD 5L-E * 6 : LHD 5-Door * 7 : LHD 3-Door
* 8 : LHD 8Way Power Seat * 9 : LHD Except 8Way Power Seat * 10 : RHD 1GR-FE * 11 : RHD 3RZ-FE * 12 : RHD 1KD-FTV
* 13 : RHD 1KZ-TE * 14 : RHD 5L-E * 15 : RHD 5-Door * 16 : RHD 3-Door * 17 : RHD 8Way Power Seat
* 18 : RHD Except 8Way Power Seat

: Junction Block and Wire Harness Connector

Code	See Page	Junction Block and Wire Harness (Connector Location)
IB	26 (LHD)	Engine Room Main Wire and Driver Side J/B (Lower Finish Panel)
IE		
IH	27 (LHD)	Instrument Panel Wire and Driver Side J/B (Lower Finish Panel)

: Connector Joining Wire Harness and Wire Harness

Code	See Page	Joining Wire Harness and Wire Harness (Connector Location)
IA1	88 (LHD)	Front Door LH Wire and Instrument Panel Wire (Left Kick Panel)
ID2	90 (LHD)	Instrument Panel Wire and Floor No.2 Wire (Left Kick Panel)
IF1	90 (LHD)	Instrument Panel Wire and Instrument Panel Wire (Near the J/B No.1)
IN2	94 (LHD)	Instrument Panel Wire and Floor Wire (Right Kick Panel)
IO1	94 (LHD)	Front Door RH Wire and Instrument Panel Wire (Right Kick Panel)
BA1	96 (*6)	Rear Door LH Wire and Instrument Panel Wire (Center Pillar LH)
BB1	96 (*6)	Rear Door RH Wire and Instrument Panel Wire (Center Pillar RH)

: Ground Points

Code	See Page	Ground Points Location
IJ	88 (LHD)	Left Kick Panel

: Splice Points

Code	See Page	Wire Harness with Splice Points	Code	See Page	Wire Harness with Splice Points
I1	90 (LHD)	Instrument Panel Wire			

* 1 : LHD 1GR-FE * 2 : LHD 3RZ-FE * 3 : LHD 1KD-FTV * 4 : LHD 1KZ-TE * 5 : LHD 5L-E * 6 : LHD 5-Door * 7 : LHD 3-Door
* 8 : LHD 8Way Power Seat * 9 : LHD Except 8Way Power Seat * 10 : RHD 1GR-FE * 11 : RHD 3RZ-FE * 12 : RHD 1KD-FTV
* 13 : RHD 1KZ-TE * 14 : RHD 5L-E * 15 : RHD 5-Door * 16 : RHD 3-Door * 17 : RHD 8Way Power Seat
* 18 : RHD Except 8Way Power Seat

Power Window (RHD w/ Jam Protection)

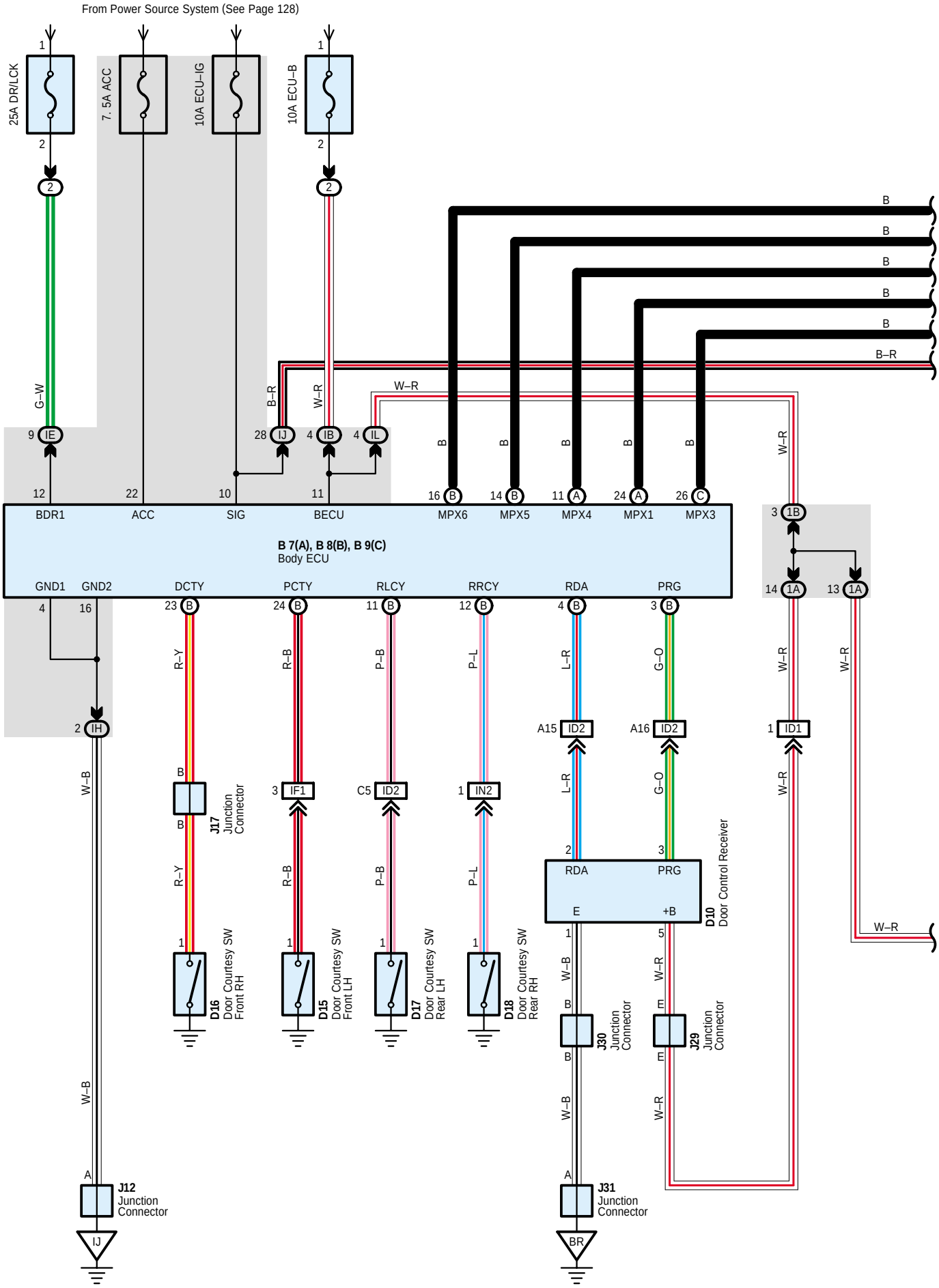

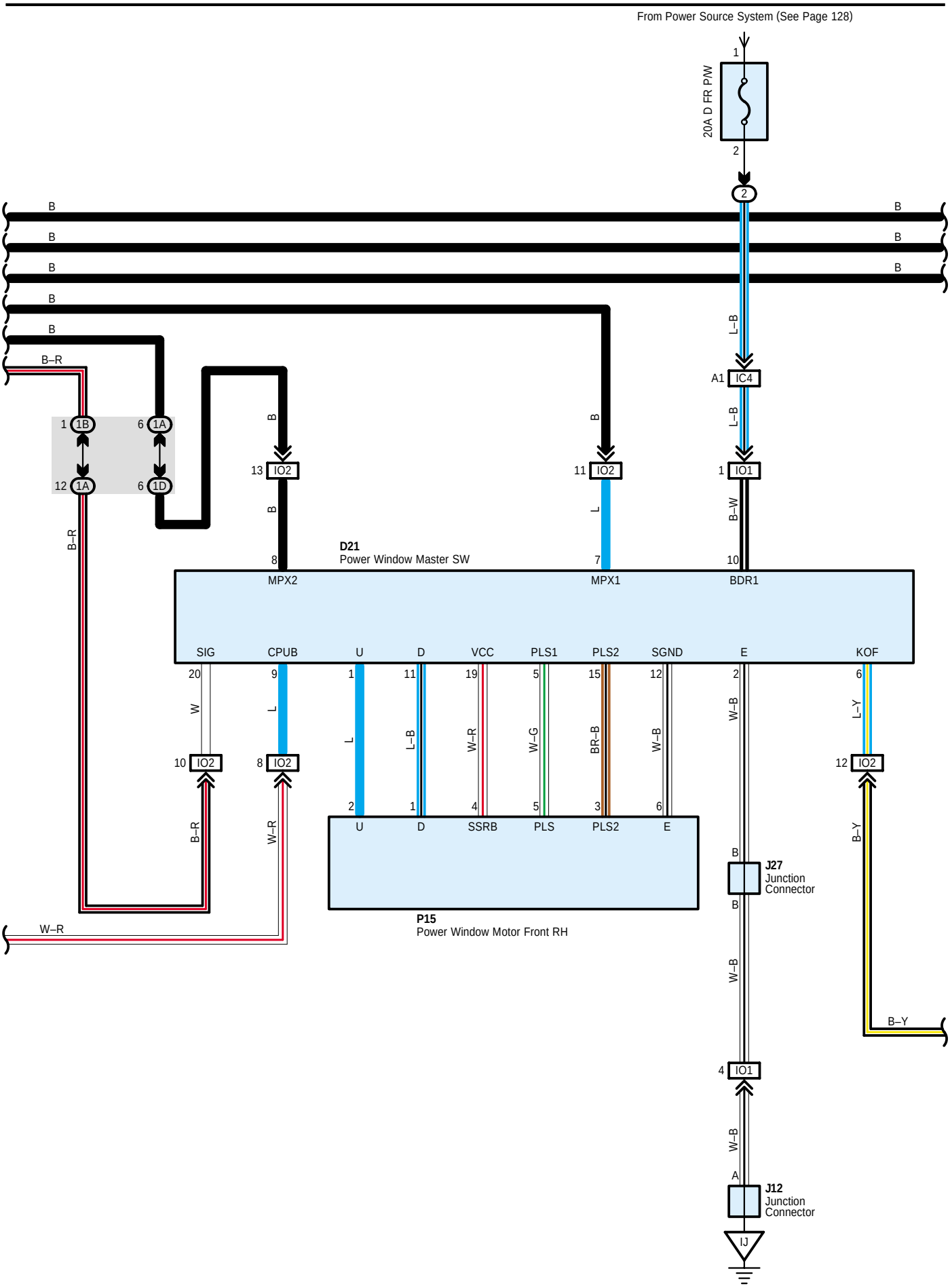
From Power Source System (See Page 128)
20A D FR P/W
1
2
2
B
B
B
B
B
B
B
B
B–R
L–B
A1 IC4
L–B
1 1B
6 1A
12 1A
6 1D
13 IO2
11 IO2
1 IO1
B–W
B–R
D21
Power Window Master SW
8
7
10
MPX2
MPX1
BDR1
SIG
CPUB
U
D
VCC
PLS1
PLS2
SGND
E
KOF
20
9
1
11
19
5
15
12
2
6
W
L
L
L–B
W–R
W–G
BR–B
W–B
W–B
L–Y
10 IO2
8 IO2
12 IO2
B–R
W–R
B–Y
2
1
4
5
3
6
U
D
SSRB
PLS
PLS2
E
B
J27
Junction
Connector
B
P15
Power Window Motor Front RH
W–R
W–B
B–Y
4 IO1
W–B
A
J12
Junction
Connector
IJ

Power Window (RHD w/ Jam Protection)

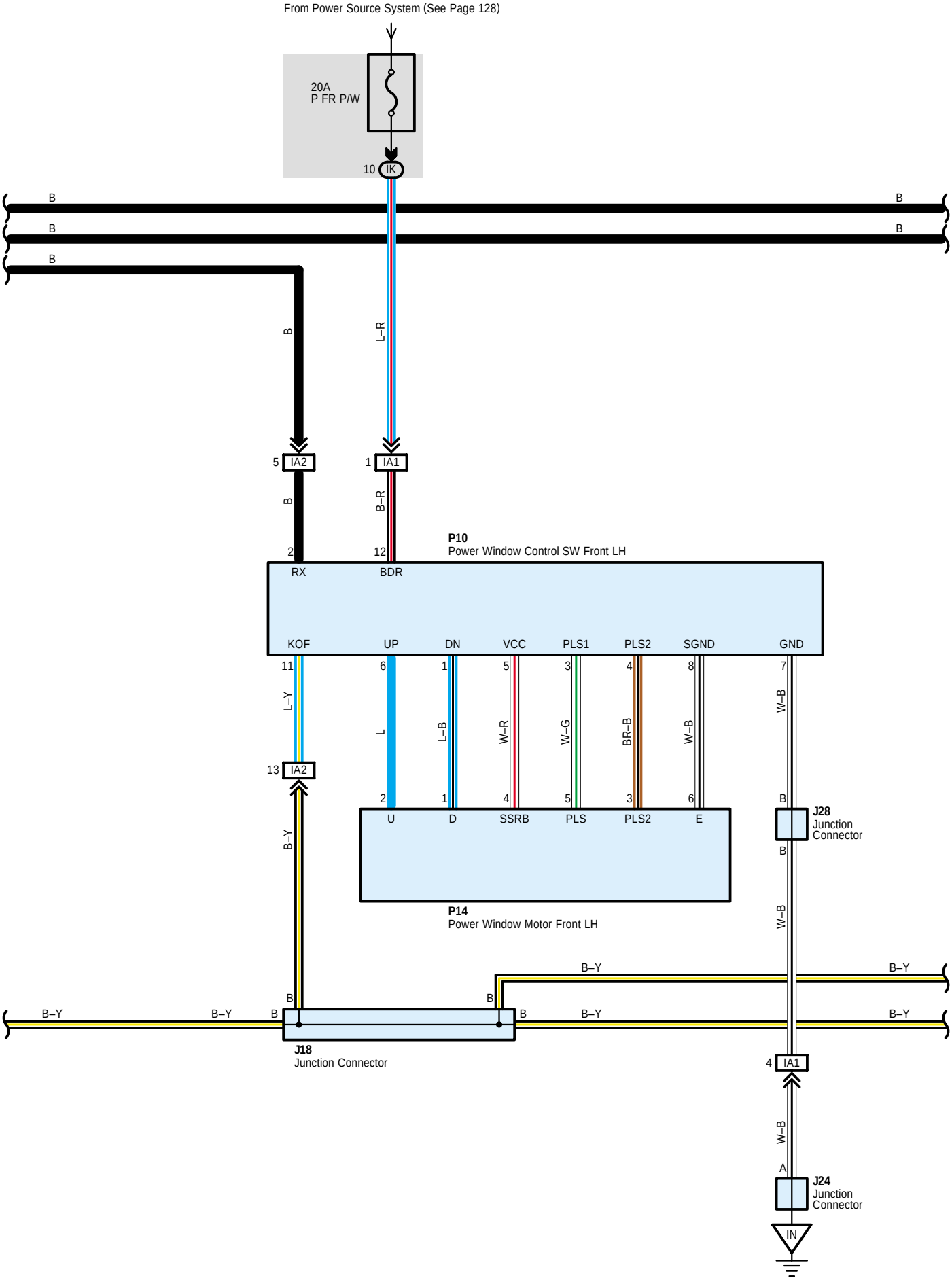

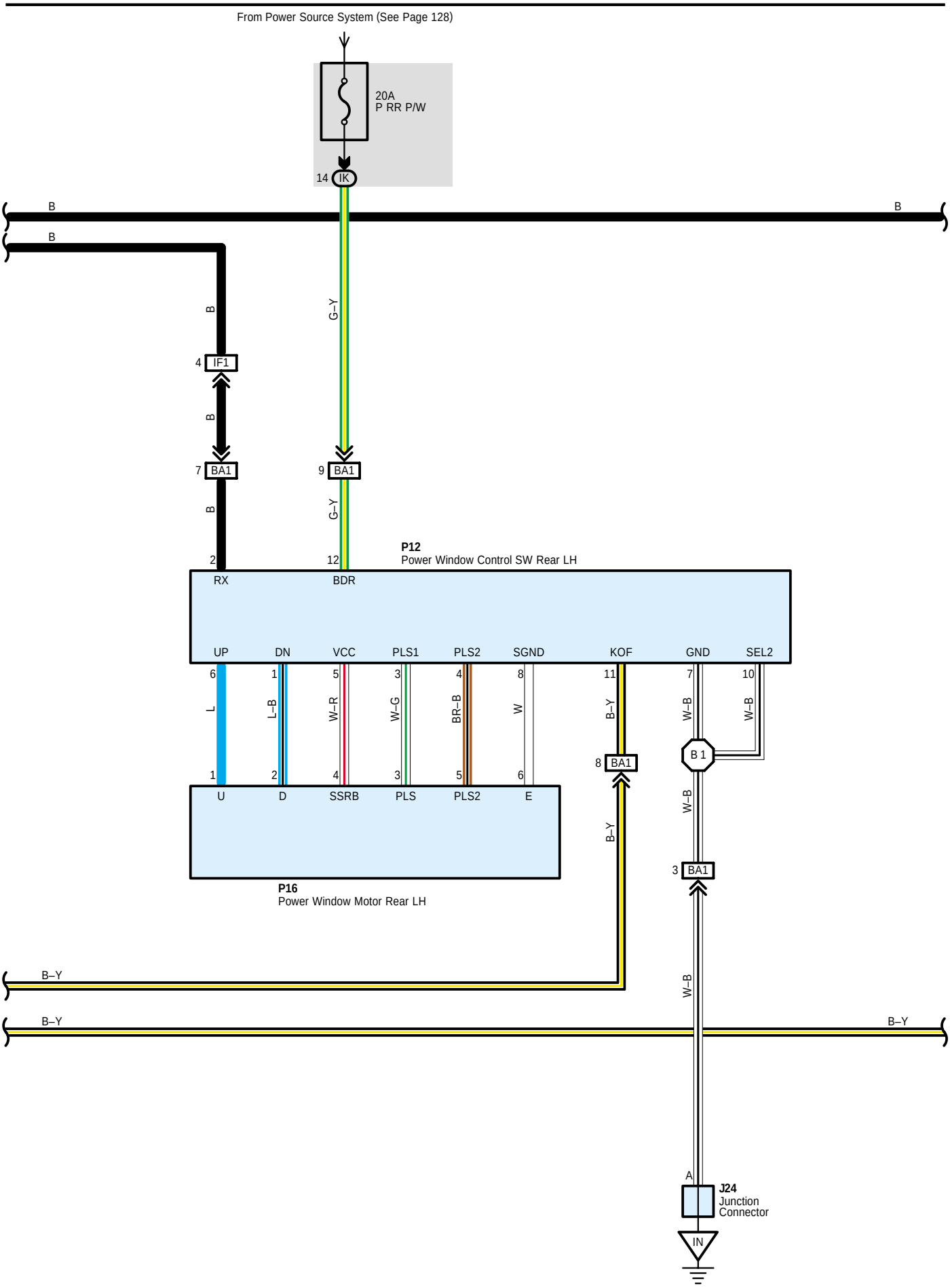
From Power Source System (See Page 128)
20A
P RR P/W
14 IK
B
B
B
B
G–Y
4 IF1
B
7 BA1
9 BA1
B
G–Y
2
12
P12
Power Window Control SW Rear LH
RX
BDR
UP
DN
VCC
PLS1
PLS2
SGND
KOF
GND
SEL2
6
1
5
3
4
8
11
7
10
L
L–B
W–R
W–G
BR–B
W
B–Y
W–B
W–B
1
2
4
3
5
6
8 BA1
B 1
U
D
SSRB
PLS
PLS2
E
B–Y
W–B
3 BA1
P16
Power Window Motor Rear LH
B–Y
W–B
B–Y
B–Y
A
J24
Junction
Connector
IN

Power Window (RHD w/ Jam Protection)

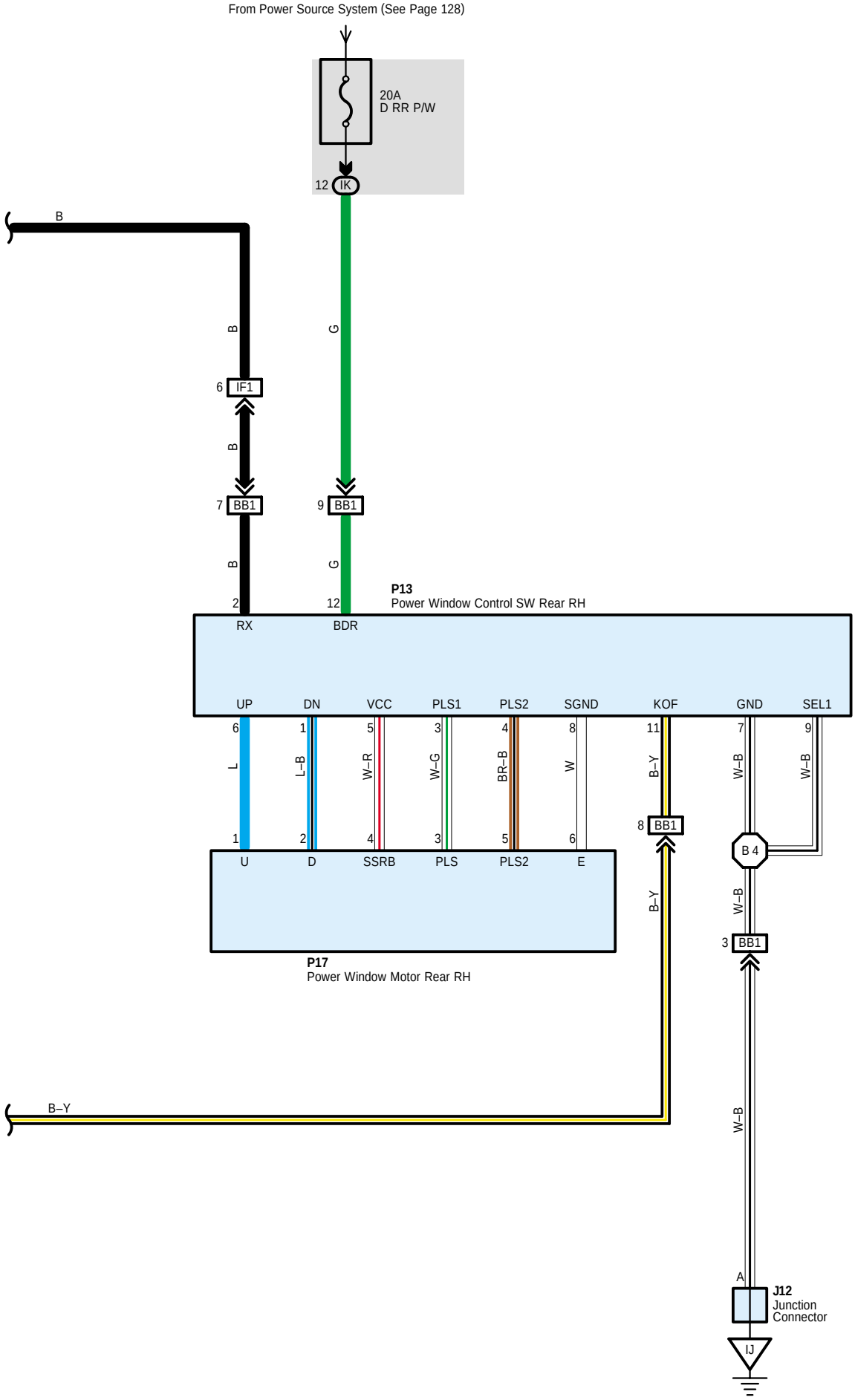

System Outline

∗ The power window system is controlled by the body ECU. This system has following features.

1. Manual Up and Down Function

This function causes the window to open or close while the power window switch is being pulled halfway up or pushed halfway down. The window stops as soon as the switch is released.

2. One-Touch Auto Up and Down Function

The all doors one-touch auto up and down function enables the window of front doors to be fully opened or closed at a touch of the power window switch.

3. Jam Protection Function

A jam protection function automatically stops the power window and moves it downward if a foreign object gets jammed in the window during one-touch auto-up operation.

4. Remote Control Function

The up and down operations of the front passenger door window and the rear door windows can be controlled by operating the power window master switch.

5. Ker-Off Operation Function

The driver's door key-off operation function makes it possible to operate the power window for approximately 45 seconds after the ignition switch is turned to the ACC or LOCK position, if the front doors are not opened.

∗ When the battery terminal or fuse is disconnected, the glass position of all doors have to be reset to the initial positions, door by door, by the power window control switch in accordance with the following procedure:

A) Reconnect the battery terminal or fuse.

B) Turn ON the ignition switch.

C) Lower the window of each door by the power window switch to open it halfway or more.

D) Then move the window up by the power window switch to close it fully.
Do not release the switch for at least one second after the window is fully closed.

Service Hints

Body ECU

22-Ground : Approx. 12 volts with ignition SW at ACC or ON position
11, 12-Ground : Always approx. 12 volts
10-Ground : Approx. 12 volts with ignition SW at ON position
4, 16-Ground : Always continuity

D21 Power Window Master SW

9, 10-Ground : Always approx. 12 volts
20-Ground : Approx. 12 volts with ignition SW at ON position
2-Ground : Always continuity

P10 Power Window Control SW Front LH

12-Ground : Always approx. 12 volts
7-Ground : Always continuity

P12 Power Window Control SW Rear LH

12-Ground : Always approx. 12 volts
7, 10-Ground : Always continuity

P13 Power Window Control SW Rear RH

12-Ground : Always approx. 12 volts
7, 9-Ground : Always continuity

Power Window (RHD w/ Jam Protection)

○ : **Parts Location**

Code		See Page	Code	See Page	Code	See Page
B7	A	68 (RHD)	J12	70 (RHD)	J31	74 (*16)
B8	B	68 (RHD)	J17	70 (RHD)	P10	73 (*15)
B9	C	68 (RHD)	J18	70 (RHD)		75 (*16)
D10		72 (*15)	J24	70 (RHD)	P12	73 (*15)
		74 (*16)	J27	72 (*15)	P13	73 (*15)
D15		72 (*15)		74 (*16)	P14	73 (*15)
		74 (*16)	J28	72 (*15)		75 (*16)
D16		72 (*15)		74 (*16)	P15	73 (*15)
		74 (*16)	J29	72 (*15)		75 (*16)
D17		72 (*15)		74 (*16)	P16	73 (*15)
D18		72 (*15)	J30	72 (*15)	P17	73 (*15)
D21		72 (*15)		74 (*16)		
		74 (*16)	J31	72 (*15)		

: **Relay Blocks**

Code	See Page	Relay Blocks (Relay Block Location)
2	23	Engine Room R/B (Engine Compartment Left)

: **Junction Block and Wire Harness Connector**

Code	See Page	Junction Block and Wire Harness (Connector Location)
IB	28 (RHD)	Engine Room Main Wire and Driver Side J/B (Lower Finish Panel)
IE		
IH	29 (RHD)	Instrument Panel Wire and Driver Side J/B (Lower Finish Panel)
IJ		
IK		
IL		
1A	32 (RHD)	Instrument Panel Wire and J/B No.1 (Instrument Panel Reinforcement Right)
1B		
1D		

: **Connector Joining Wire Harness and Wire Harness**

Code	See Page	Joining Wire Harness and Wire Harness (Connector Location)
IA1	112 (RHD)	Front Door LH Wire and Instrument Panel Wire (Left Kick Panel)
IA2		
IC4	112 (RHD)	Instrument Panel Wire and Engine Room Main Wire (Left Kick Panel)
ID1	114 (RHD)	Instrument Panel Wire and Floor No.2 Wire (Left Kick Panel)
ID2		
IF1	114 (RHD)	Instrument Panel Wire and Instrument Panel Wire (Near the J/B No.1)
IN2	118 (RHD)	Instrument Panel Wire and Floor Wire (Right Kick Panel)
IO1	118 (RHD)	Front Door RH Wire and Instrument Panel Wire (Right Kick Panel)
IO2		
BA1	120 (*15)	Rear Door LH Wire and Instrument Panel Wire (Center Pillar LH)
BB1	120 (*15)	Rear Door RH Wire and Instrument Panel Wire (Center Pillar RH)

* 1 : LHD 1GR-FE * 2 : LHD 3RZ-FE * 3 : LHD 1KD-FTV * 4 : LHD 1KZ-TE * 5 : LHD 5L-E * 6 : LHD 5-Door * 7 : LHD 3-Door
* 8 : LHD 8Way Power Seat * 9 : LHD Except 8Way Power Seat * 10 : RHD 1GR-FE * 11 : RHD 3RZ-FE * 12 : RHD 1KD-FTV
* 13 : RHD 1KZ-TE * 14 : RHD 5L-E * 15 : RHD 5-Door * 16 : RHD 3-Door * 17 : RHD 8Way Power Seat
* 18 : RHD Except 8Way Power Seat

▽ : **Ground Points**

Code	See Page	Ground Points Location
IJ	112 (RHD)	Right Kick Panel
IN	112 (RHD)	Left Kick Panel
BR	120 (*15)	Left Quarter Panel Inner
	124 (*16)	

◯ : **Splice Points**

Code	See Page	Wire Harness with Splice Points	Code	See Page	Wire Harness with Splice Points
B1	122 (*15)	Rear Door No.1 Wire LH	B4	122 (*15)	Rear Door No.1 Wire RH

* 1 : LHD 1GR-FE * 2 : LHD 3RZ-FE * 3 : LHD 1KD-FTV * 4 : LHD 1KZ-TE * 5 : LHD 5L-E * 6 : LHD 5-Door * 7 : LHD 3-Door
* 8 : LHD 8Way Power Seat * 9 : LHD Except 8Way Power Seat * 10 : RHD 1GR-FE * 11 : RHD 3RZ-FE * 12 : RHD 1KD-FTV
* 13 : RHD 1KZ-TE * 14 : RHD 5L-E * 15 : RHD 5-Door * 16 : RHD 3-Door * 17 : RHD 8Way Power Seat
* 18 : RHD Except 8Way Power Seat

Power Window (RHD w/o Jam Protection)

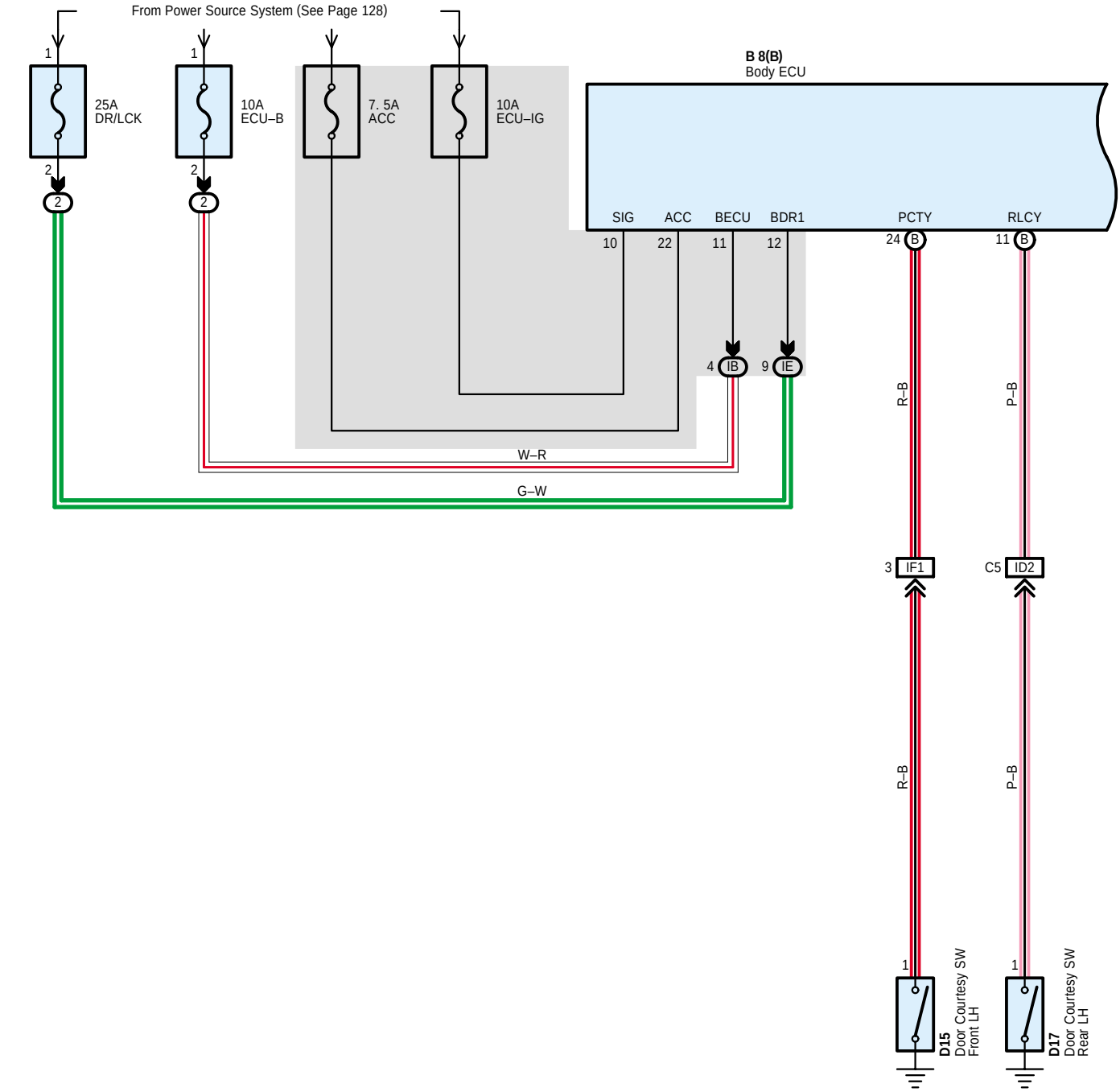

From Power Source System (See Page 128)

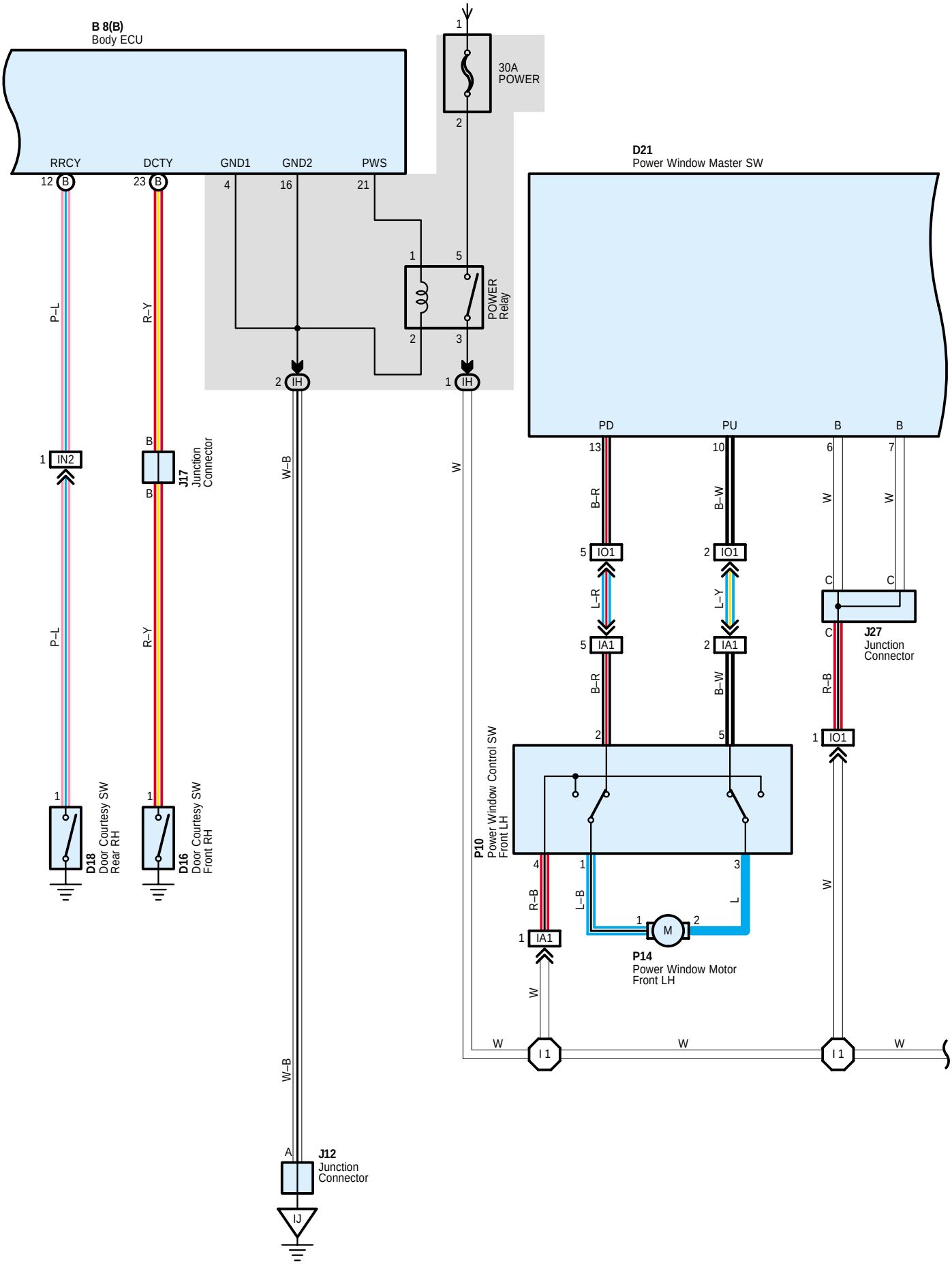

Power Window (RHD w/o Jam Protection)

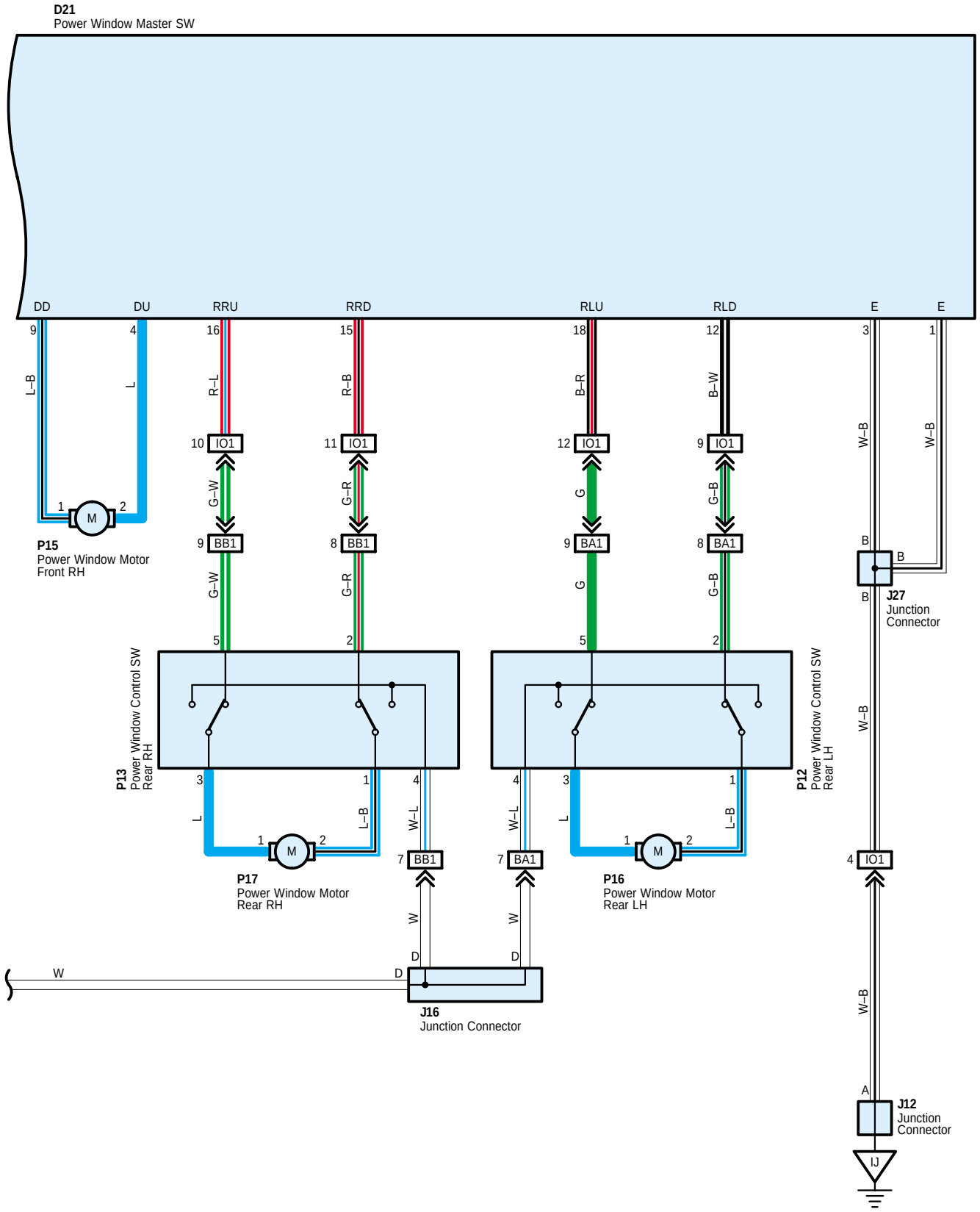

System Outline

∗ The power window system is controlled by the body ECU. This system has following features.

1. Manual Up and Down Function

This function causes the window to open or close while the power window switch is being pulled halfway up or pushed halfway down. The window stops as soon as the switch is released.

2. Driver's Door One-Touch Auto Up and Down Function

The driver's door one-touch auto down function enables the window of front doors to be fully opened at a touch of the power window switch.

3. Remote Control Function

The up and down operations of the front passenger door window and the rear door windows can be controlled by operating the power window master switch.

4. Ker-Off Operation Function

The driver's door key-off operation function makes it possible to operate the power window for approximately 45 seconds after the ignition switch is turned to the ACC or LOCK position, if the front doors are not opened.

∗ When the battery terminal or fuse is disconnected, the glass position of all doors have to be reset to the initial positions, door by door, by the power window control switch in accordance with the following procedure:

A) Reconnect the battery terminal or fuse.

B) Turn ON the ignition switch.

C) Lower the window of each door by the power window switch to open it halfway or more.

D) Then move the window up by the power window switch to close it fully.
Do not release the switch for at least one second after the window is fully closed.

Service Hints

Body ECU

22-Ground : Approx. 12 volts with ignition SW at ACC or ON position
11, 12-Ground : Always approx. 12 volts
10-Ground : Approx. 12 volts with ignition SW at ON position
4, 16-Ground : Always continuity

: Parts Location

Code		See Page	Code	See Page	Code	See Page
B8	B	68 (RHD)	D21	74 (*16)	P12	73 (*15)
D15		72 (*15)	J12	70 (RHD)	P13	73 (*15)
		74 (*16)	J16	70 (RHD)	P14	73 (*15)
D16		72 (*15)	J17	70 (RHD)		75 (*16)
		74 (*16)	J27	72 (*15)	P15	73 (*15)
D17		72 (*15)		74 (*16)		75 (*16)
D18		72 (*15)	P10	73 (*15)	P16	73 (*15)
D21		72 (*15)		75 (*16)	P17	73 (*15)

: Relay Blocks

Code	See Page	Relay Blocks (Relay Block Location)
2	23	Engine Room R/B (Engine Compartment Left)

: Junction Block and Wire Harness Connector

Code	See Page	Junction Block and Wire Harness (Connector Location)
IB	28 (RHD)	Engine Room Main Wire and Driver Side J/B (Lower Finish Panel)
IE		
IH	29 (RHD)	Instrument Panel Wire and Driver Side J/B (Lower Finish Panel)

* 1 : LHD 1GR-FE * 2 : LHD 3RZ-FE * 3 : LHD 1KD-FTV * 4 : LHD 1KZ-TE * 5 : LHD 5L-E * 6 : LHD 5-Door * 7 : LHD 3-Door
* 8 : LHD 8Way Power Seat * 9 : LHD Except 8Way Power Seat * 10 : RHD 1GR-FE * 11 : RHD 3RZ-FE * 12 : RHD 1KD-FTV
* 13 : RHD 1KZ-TE * 14 : RHD 5L-E * 15 : RHD 5-Door * 16 : RHD 3-Door * 17 : RHD 8Way Power Seat
* 18 : RHD Except 8Way Power Seat

: Connector Joining Wire Harness and Wire Harness

Code	See Page	Joining Wire Harness and Wire Harness (Connector Location)
IA1	112 (RHD)	Front Door LH Wire and Instrument Panel Wire (Left Kick Panel)
ID2	114 (RHD)	Instrument Panel Wire and Floor No.2 Wire (Left Kick Panel)
IF1	114 (RHD)	Instrument Panel Wire and Instrument Panel Wire (Near the J/B No.1)
IN2	118 (RHD)	Instrument Panel Wire and Floor Wire (Right Kick Panel)
IO1	118 (RHD)	Front Door RH Wire and Instrument Panel Wire (Right Kick Panel)
BA1	120 (*15)	Rear Door LH Wire and Instrument Panel Wire (Center Pillar LH)
BB1	120 (*15)	Rear Door RH Wire and Instrument Panel Wire (Center Pillar RH)

: Ground Points

Code	See Page	Ground Points Location
IJ	112 (RHD)	Right Kick Panel

: Splice Points

Code	See Page	Wire Harness with Splice Points	Code	See Page	Wire Harness with Splice Points
I1	114 (RHD)	Instrument Panel Wire			

* 1 : LHD 1GR-FE * 2 : LHD 3RZ-FE * 3 : LHD 1KD-FTV * 4 : LHD 1KZ-TE * 5 : LHD 5L-E * 6 : LHD 5-Door * 7 : LHD 3-Door
* 8 : LHD 8Way Power Seat * 9 : LHD Except 8Way Power Seat * 10 : RHD 1GR-FE * 11 : RHD 3RZ-FE * 12 : RHD 1KD-FTV
* 13 : RHD 1KZ-TE * 14 : RHD 5L-E * 15 : RHD 5-Door * 16 : RHD 3-Door * 17 : RHD 8Way Power Seat
* 18 : RHD Except 8Way Power Seat

Wireless Door Lock Control (LHD)

From Power Source System (See Page 128)

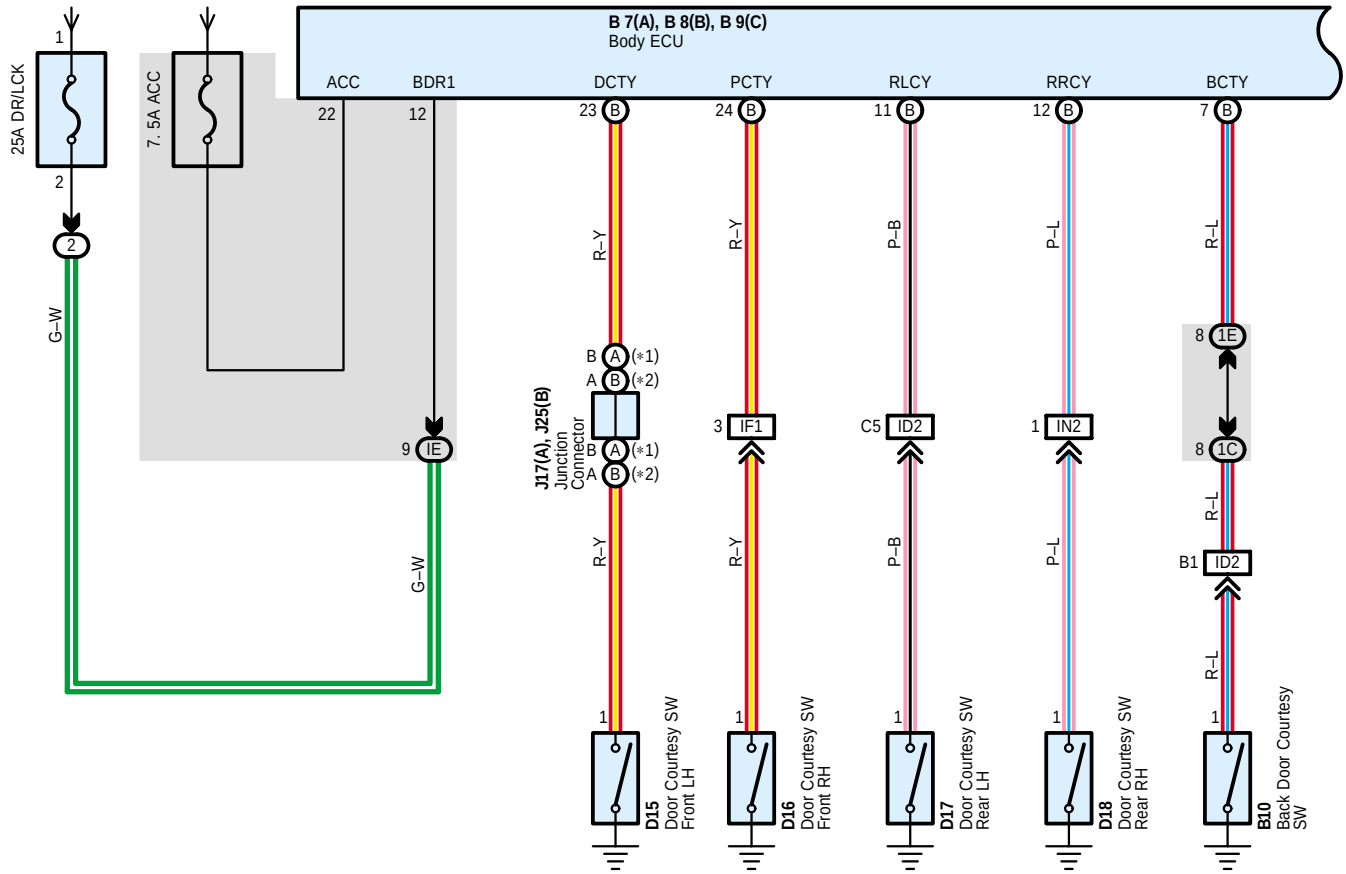

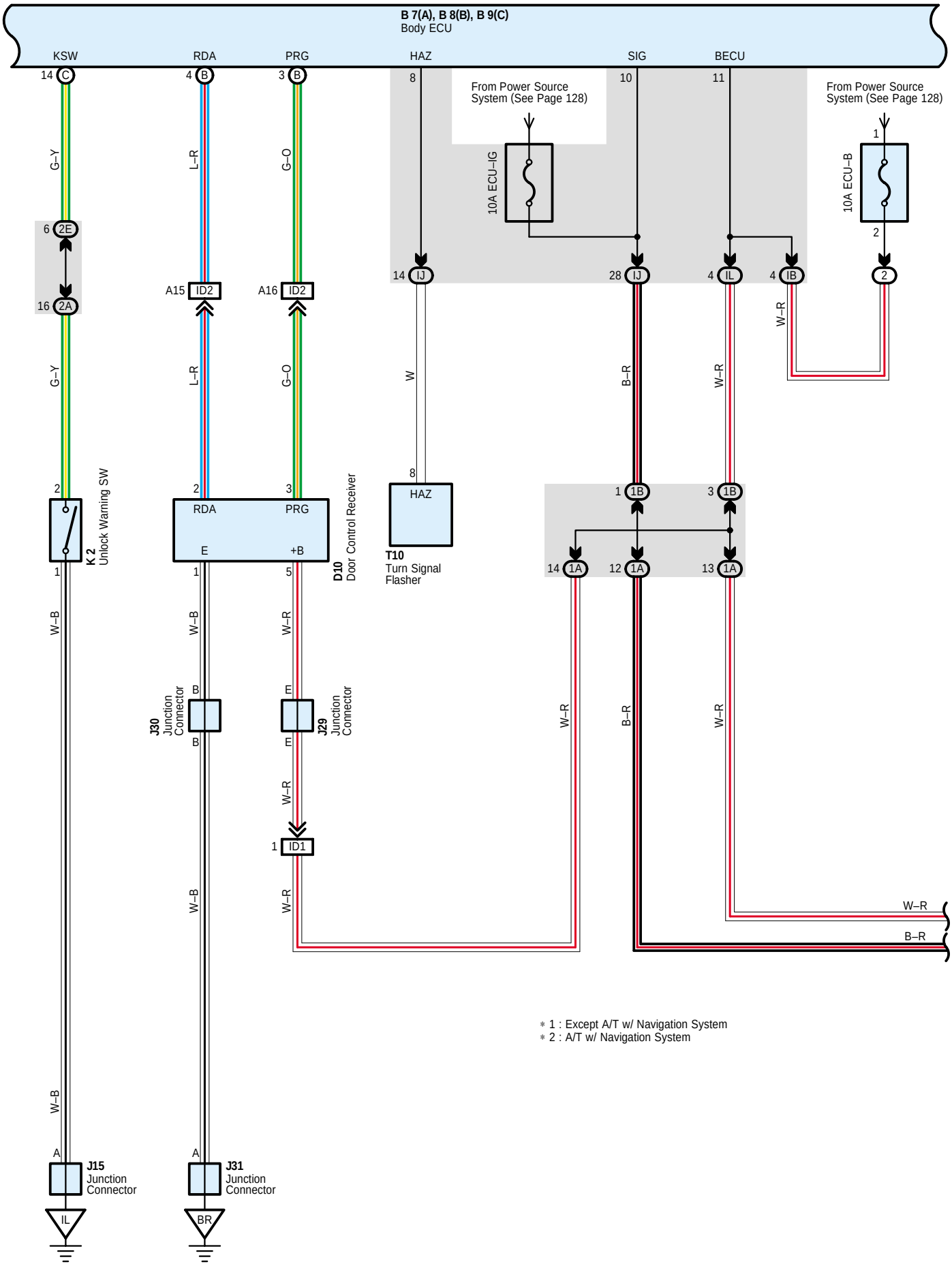
B 7(A), B 8(B), B 9(C)
Body ECU
KSW
RDA
PRG
HAZ
SIG
BECU
From Power Source System (See Page 128)
10A ECU–IG
10A ECU–B
G–Y
L–R
G–O
W
B–R
W–R
W–B
K 2
Unlock Warning SW
D10
Door Control Receiver
T10
Turn Signal Flasher
J30
Junction Connector
J29
Junction Connector
J15
Junction Connector
J31
Junction Connector
IL
BR
∗ 1 : Except A/T w/ Navigation System
∗ 2 : A/T w/ Navigation System

Wireless Door Lock Control (LHD)

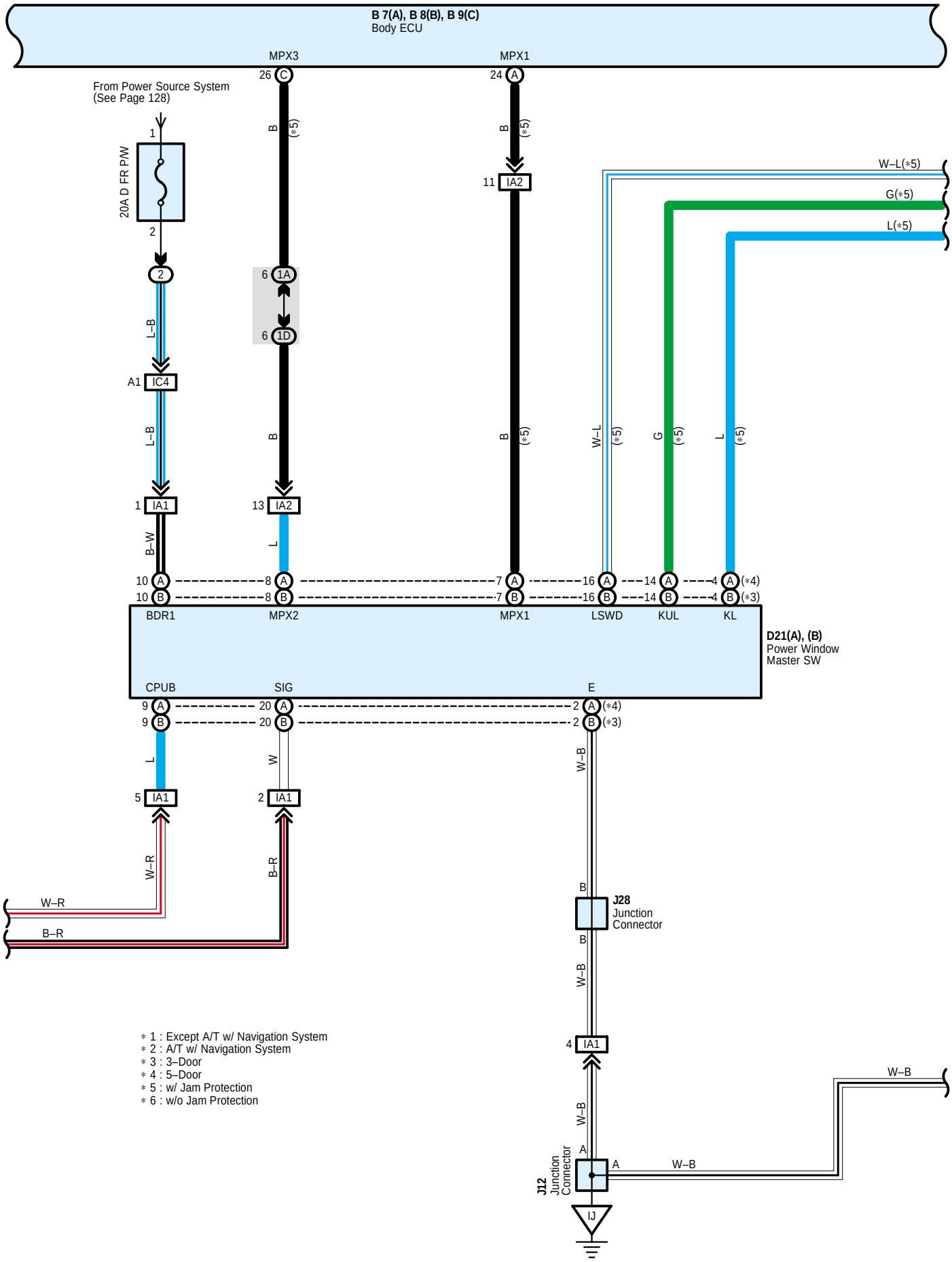

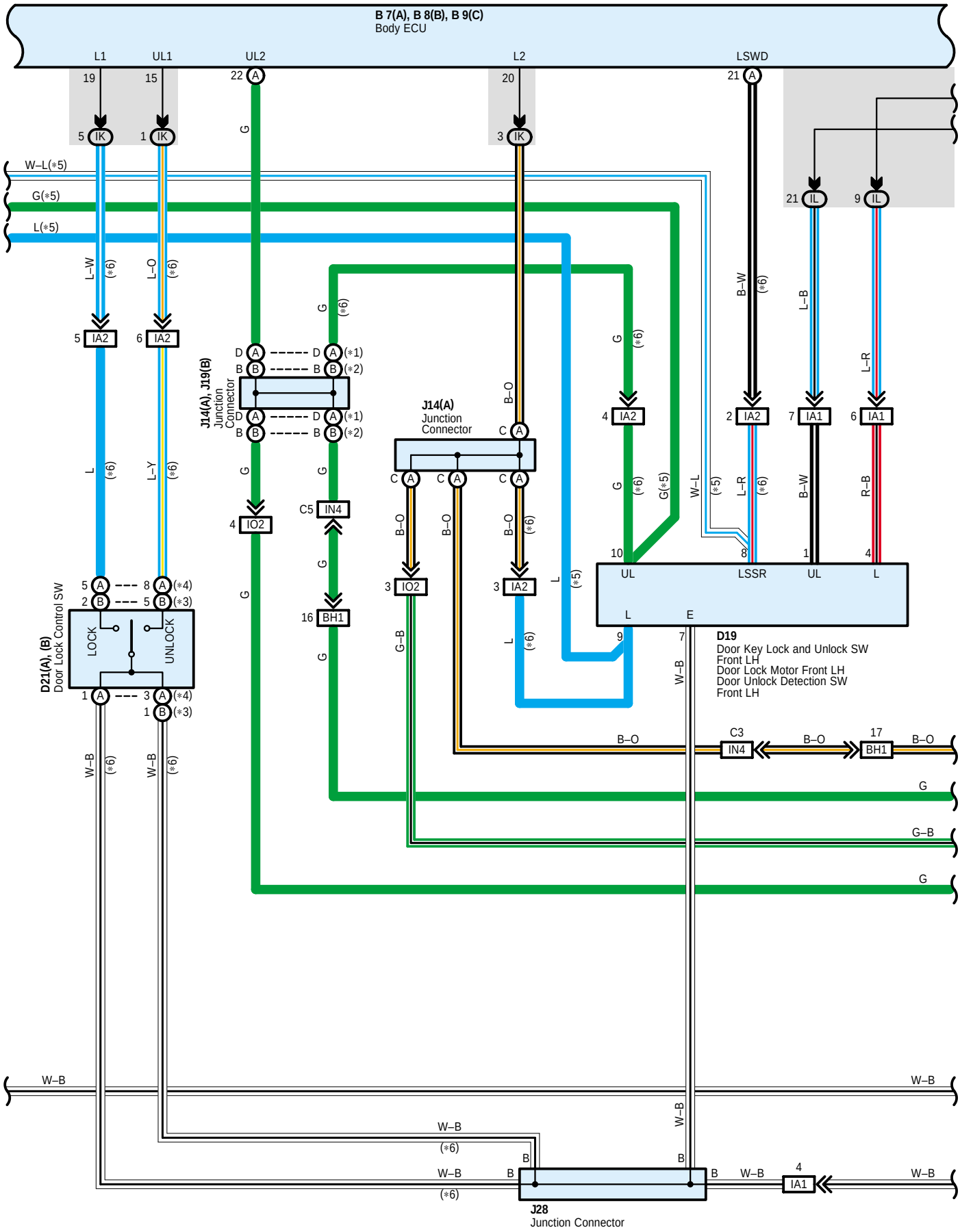
B 7(A), B 8(B), B 9(C)
Body ECU
L1
UL1
UL2
L2
LSWD
W–L(*5)
G(*5)
L(*5)
J14(A), J19(B)
Junction Connector
J14(A)
Junction Connector
D21(A), (B)
Door Lock Control SW
LOCK
UNLOCK
D19
Door Key Lock and Unlock SW Front LH
Door Lock Motor Front LH
Door Unlock Detection SW Front LH
J28
Junction Connector

Wireless Door Lock Control (LHD)

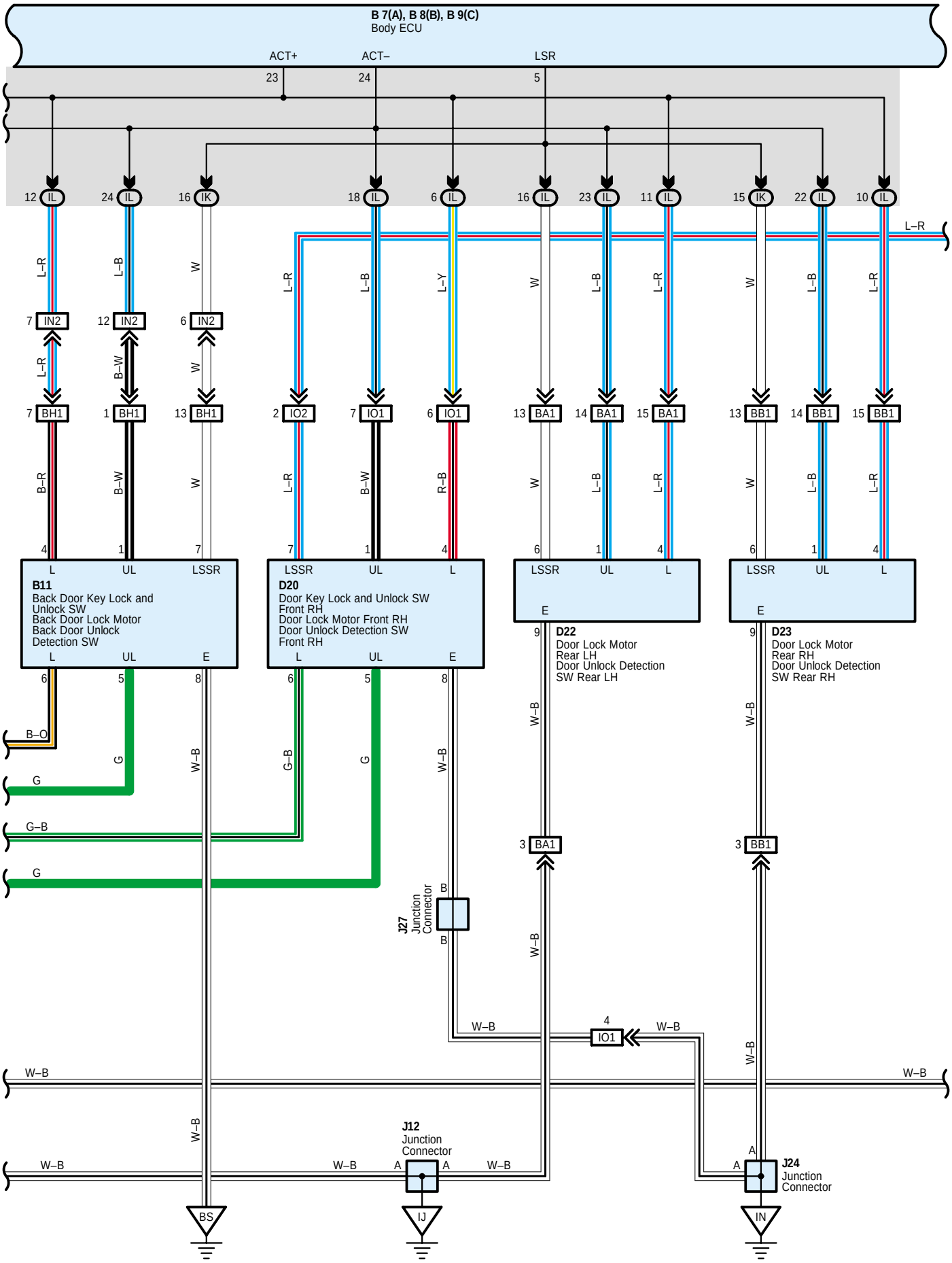

From Power Source System (See Page 128)

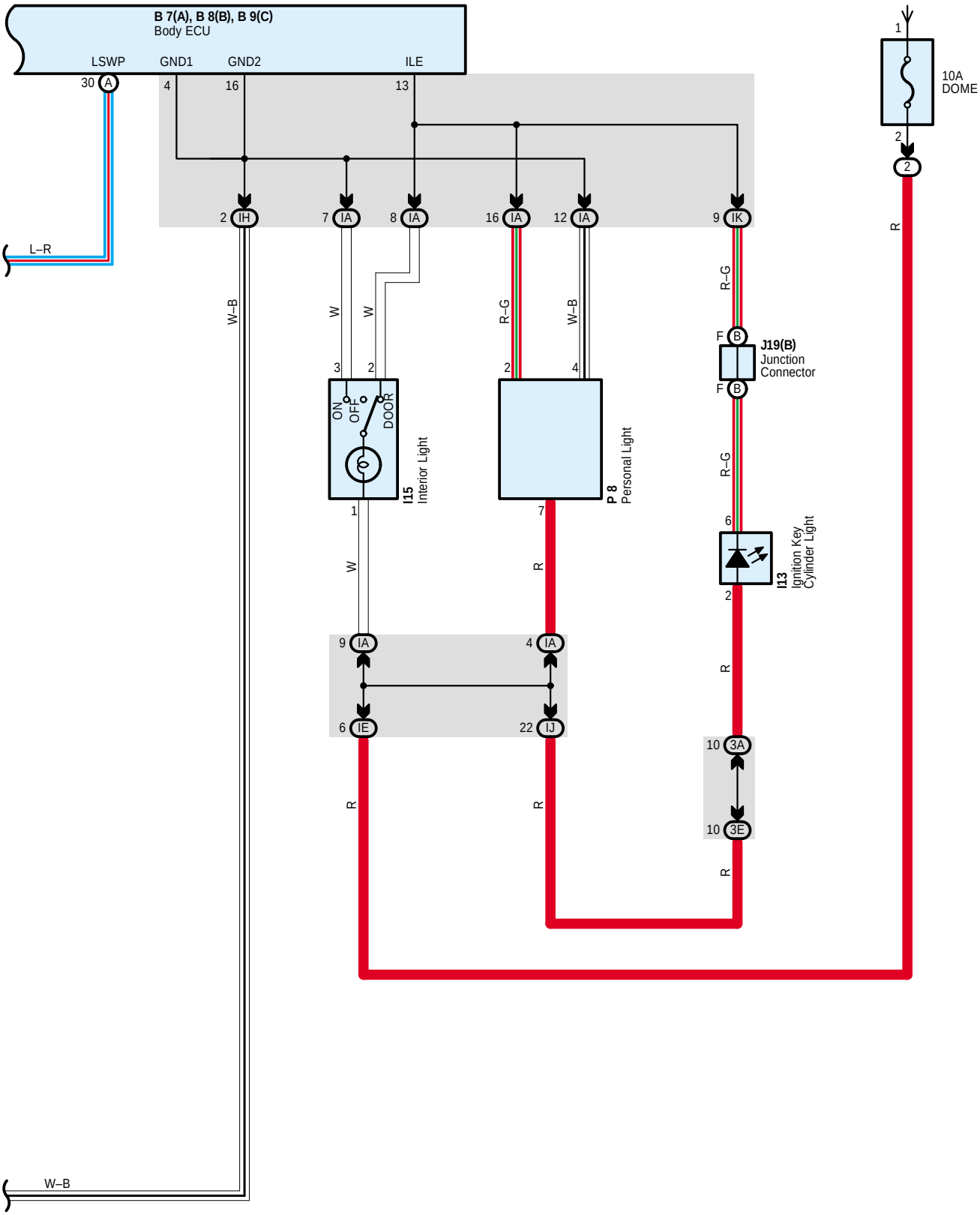

System Outline

Door lock control (Lock and unlock) and panic control (Theft alarm and flash) is performed by remote control, without the ignition key inserted in the door key cylinder, using low-power electrical waves emitted by a transmitter.

1. Normal Operation

* Lock operation
  When the lock SW on the transmitter is pressed, all the doors are locked.
* Unlock operation
  When the unlock SW on the transmitter is pressed, all the doors are unlocked.

2. Auto Lock Function

When the door is not actually opened within 30 seconds after the door has been unlocked by the unlock SW on the transmitter, all the doors are automatically locked. If any of the following conditions are detected, the wireless door lock does not function.

* Any door is opened.
* The ignition key is inserted into the ignition SW.
* When the lock detection SW of all the doors are locked.

3. Wireless Door Lock Stop Function

If any of the following conditions are detected, the wireless door lock does not function.

Lock operation

* When any door is open (Door courtesy SW on)
* The ignition key is inserted into the ignition SW (Unlock warning SW on)
* Ignition SW is on

Unlock operation

* Ignition SW is on
* The ignition key is inserted into the ignition SW (Unlock warning SW on)

4. Visual Confirmation of Lock or Unlock

During lock operation, when the body ECU receives a lock signal from the door lock detection SW, the turn signal light is flashed once. During unlock operation, when the body ECU receives an unlock signal from the door lock detection SW, the turn signal light is flashed twice.

5. Repeat Function

If the lock detection signal in response to the output signal is not received after the body ECU has output the lock signal, the lock signal is output again.

6. Illuminated Entry Function

When the body ECU detects the unlock state after the unlock operation has been made, it turns on the lights, such as the ignition key cylinder light and interior light for approx. 15 sec. If all the doors are locked during this operation, lighting is cancelled and the lights immediately fade out.

Service Hints

Body ECU

11, 12-Ground : Always approx. 12 volts
10-Ground : Approx. 12 volts with ignition SW at ON position
22-Ground : Approx. 12 volts with ignition SW at ACC or ON position
4, 16-Ground : Always continuity

: Parts Location

Code		See Page	Code		See Page	Code		See Page
B7	A	48 (LHD)	D19		54 (*7)	J25	B	50 (LHD)
B8	B	48 (LHD)	D20		52 (*6)	J27		52 (*6)
B9	C	48 (LHD)			54 (*7)			54 (*7)
B10		52 (*6)	D21	A	52 (*6)	J28		52 (*6)
		54 (*7)		B	54 (*7)			54 (*7)
B11		52 (*6)	D22		52 (*6)	J29		52 (*6)
		54 (*7)	D23		52 (*6)			54 (*7)
D10		52 (*6)	I13		50 (LHD)	J30		52 (*6)
		54 (*7)	I15		52 (*6)			54 (*7)
D15		52 (*6)			54 (*7)	J31		52 (*6)
		54 (*7)	J12		50 (LHD)			54 (*7)
D16		52 (*6)	J14	A	50 (LHD)	K2		50 (LHD)
		54 (*7)	J15		50 (LHD)	P8		53 (*6)
D17		52 (*6)	J17	A	50 (LHD)			55 (*7)
D18		52 (*6)	J19	B	50 (LHD)	T10		51 (LHD)
D19		52 (*6)	J24		50 (LHD)			

: Relay Blocks

Code	See Page	Relay Blocks (Relay Block Location)
2	23	Engine Room R/B (Engine Compartment Left)

: Junction Block and Wire Harness Connector

Code	See Page	Junction Block and Wire Harness (Connector Location)
IA	26 (LHD)	Roof Wire and Driver Side J/B (Lower Finish Panel)
IB	26 (LHD)	Engine Room Main Wire and Driver Side J/B (Lower Finish Panel)
IE		
IH	27 (LHD)	Instrument Panel Wire and Driver Side J/B (Lower Finish Panel)
IJ		
IK		
IL		
1A	32 (LHD)	Instrument Panel Wire and J/B No.1 (Instrument Panel Reinforcement Left)
1B		
1C		
1D		
1E		
2A	34	Instrument Panel Wire and J/B No.2 (Instrument Panel Reinforcement Center)
2E		
3A	36 (LHD)	Instrument Panel Wire and J/B No.3 (Instrument Panel Reinforcement Right)
3E		

* 1 : LHD 1GR-FE * 2 : LHD 3RZ-FE * 3 : LHD 1KD-FTV * 4 : LHD 1KZ-TE * 5 : LHD 5L-E * 6 : LHD 5-Door * 7 : LHD 3-Door
* 8 : LHD 8Way Power Seat * 9 : LHD Except 8Way Power Seat * 10 : RHD 1GR-FE * 11 : RHD 3RZ-FE * 12 : RHD 1KD-FTV
* 13 : RHD 1KZ-TE * 14 : RHD 5L-E * 15 : RHD 5-Door * 16 : RHD 3-Door * 17 : RHD 8Way Power Seat
* 18 : RHD Except 8Way Power Seat

: Connector Joining Wire Harness and Wire Harness

Code	See Page	Joining Wire Harness and Wire Harness (Connector Location)
IA1	88 (LHD)	Front Door LH Wire and Instrument Panel Wire (Left Kick Panel)
IA2		
IC4	88 (LHD)	Instrument Panel Wire and Engine Room Main Wire (Left Kick Panel)
ID1	90 (LHD)	Instrument Panel Wire and Floor No.2 Wire (Left Kick Panel)
ID2		
IF1	90 (LHD)	Instrument Panel Wire and Instrument Panel Wire (Near the J/B No.1)
IN2	94 (LHD)	Instrument Panel Wire and Floor Wire (Right Kick Panel)
IN4		
IO1	94 (LHD)	Front Door RH Wire and Instrument Panel Wire (Right Kick Panel)
IO2		
BA1	96 (*6)	Rear Door LH Wire and Instrument Panel Wire (Center Pillar LH)
BB1	96 (*6)	Rear Door RH Wire and Instrument Panel Wire (Center Pillar RH)
BH1	98 (*6)	Back Door No.1 Wire and Floor Wire (Right Quarter Panel Inner)
	100 (*7)	

: Ground Points

Code	See Page	Ground Points Location
IJ	88 (LHD)	Left Kick Panel
IL	88 (LHD)	Near the Right Side of Steering Column
IN	88 (LHD)	Right Kick Panel
BR	96 (*6)	Left Quarter Panel Inner
	100 (*7)	
BS	96 (*6)	Back Door Panel Center
	100 (*7)	

* 1 : LHD 1GR-FE * 2 : LHD 3RZ-FE * 3 : LHD 1KD-FTV * 4 : LHD 1KZ-TE * 5 : LHD 5L-E * 6 : LHD 5-Door * 7 : LHD 3-Door
* 8 : LHD 8Way Power Seat * 9 : LHD Except 8Way Power Seat * 10 : RHD 1GR-FE * 11 : RHD 3RZ-FE * 12 : RHD 1KD-FTV
* 13 : RHD 1KZ-TE * 14 : RHD 5L-E * 15 : RHD 5-Door * 16 : RHD 3-Door * 17 : RHD 8Way Power Seat
* 18 : RHD Except 8Way Power Seat

Wireless Door Lock Control (RHD)

From Power Source System (See Page 128)

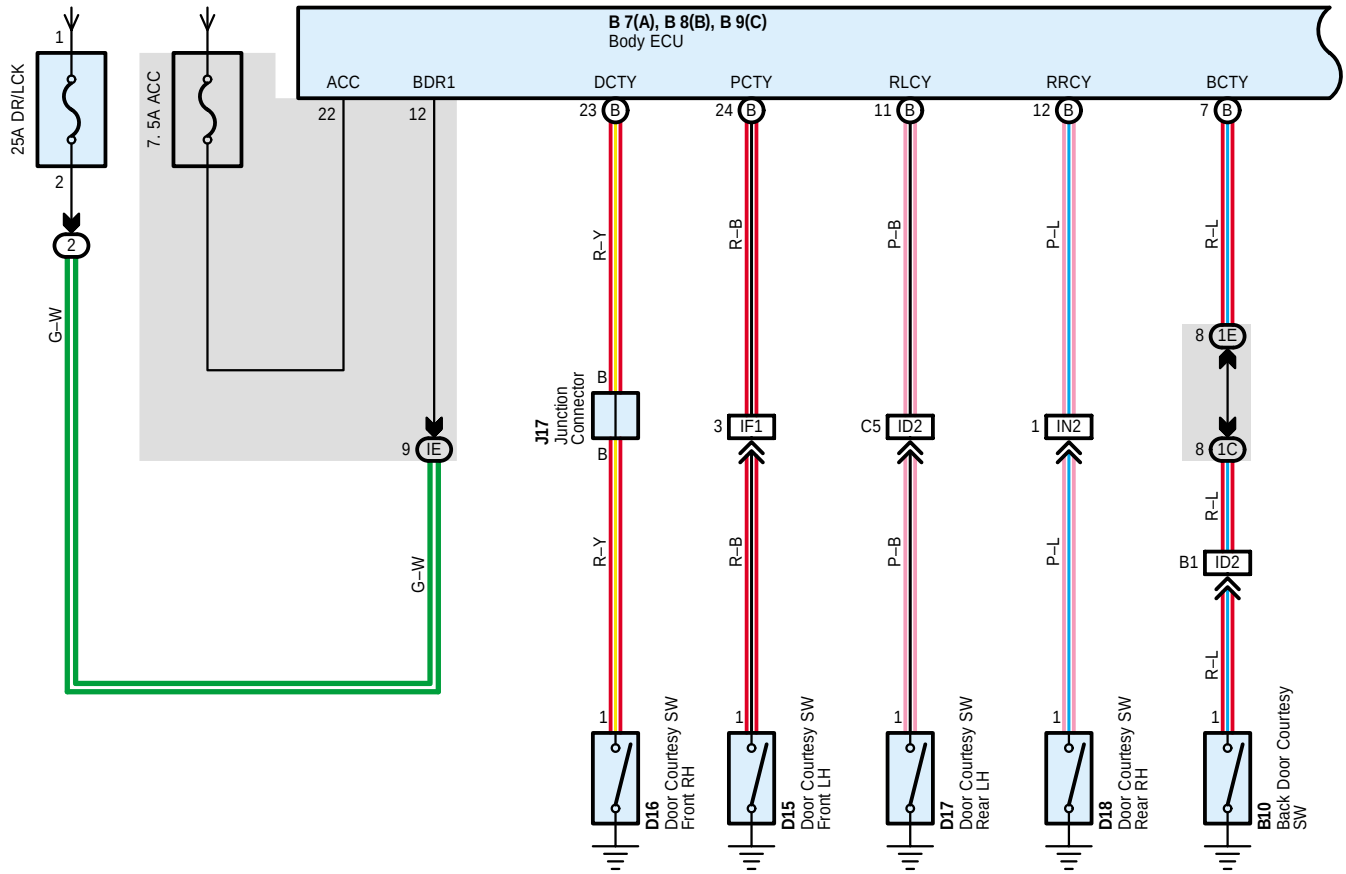

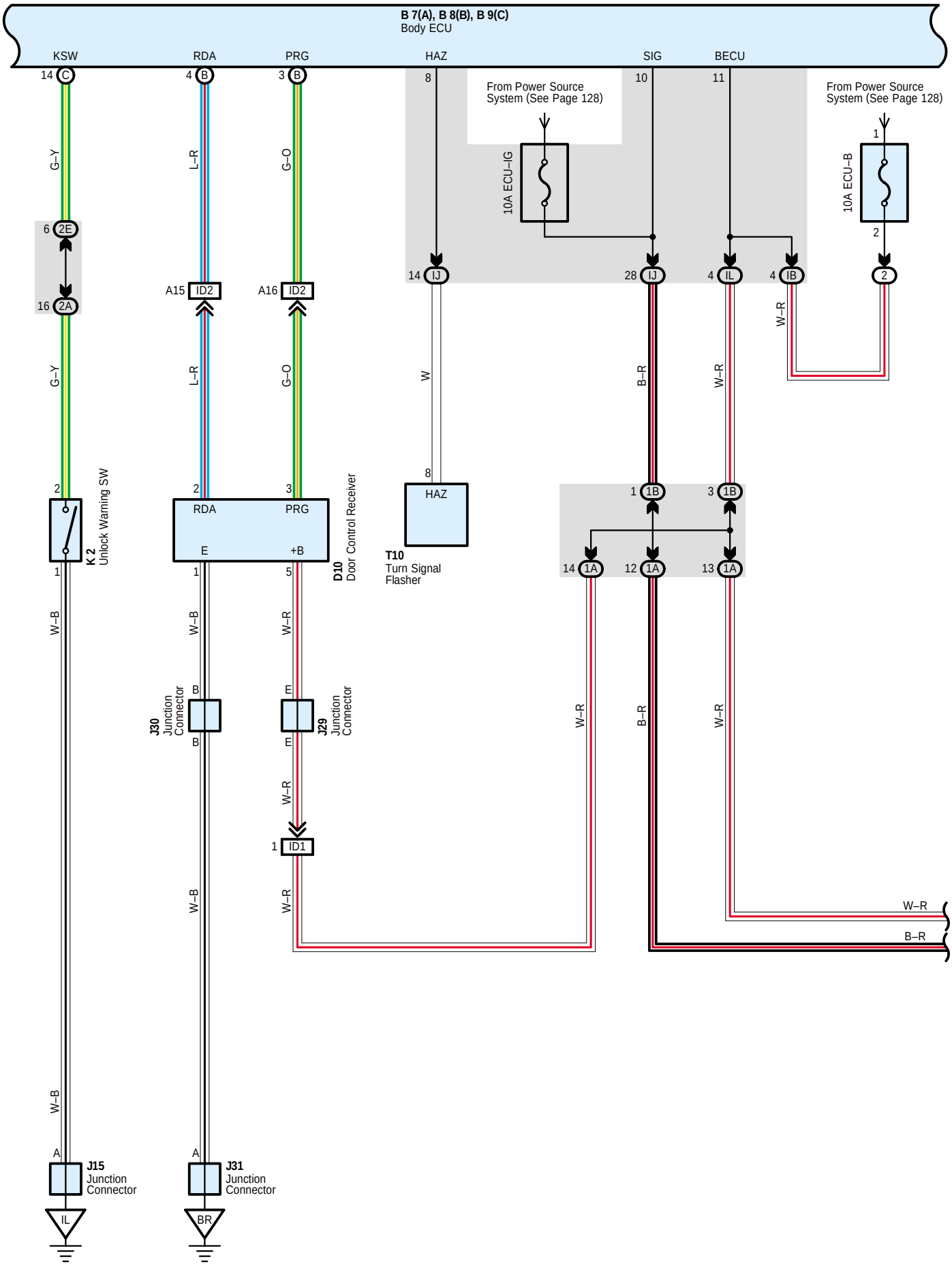
B 7(A), B 8(B), B 9(C)
Body ECU
KSW
RDA
PRG
HAZ
SIG
BECU
From Power Source System (See Page 128)
10A ECU–IG
10A ECU–B
K 2
Unlock Warning SW
D10
Door Control Receiver
T10
Turn Signal Flasher
J30
Junction Connector
J29
Junction Connector
J15
Junction Connector
J31
Junction Connector
G–Y
L–R
G–O
W
B–R
W–R
W–B
IL
BR

Wireless Door Lock Control (RHD)

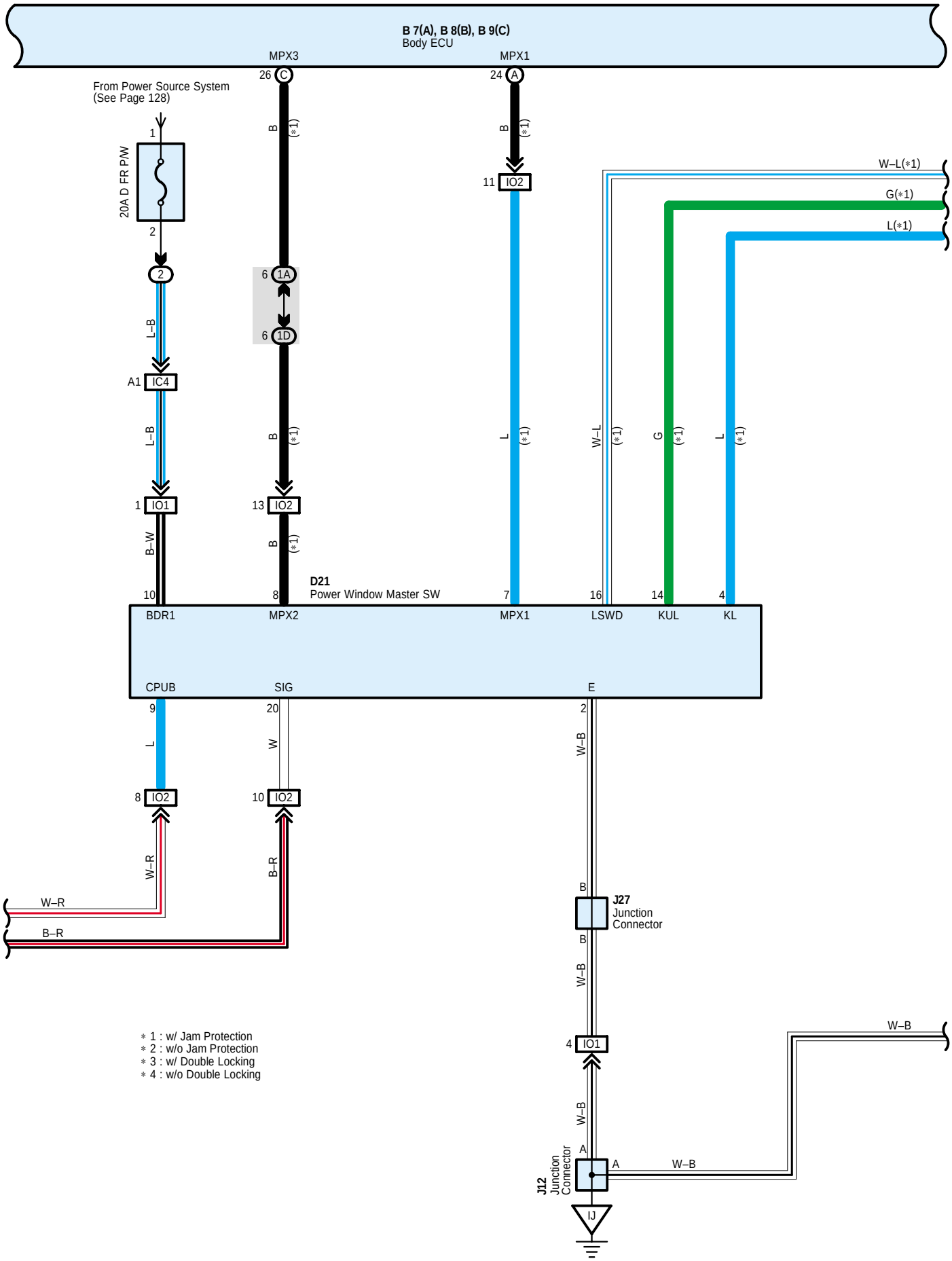

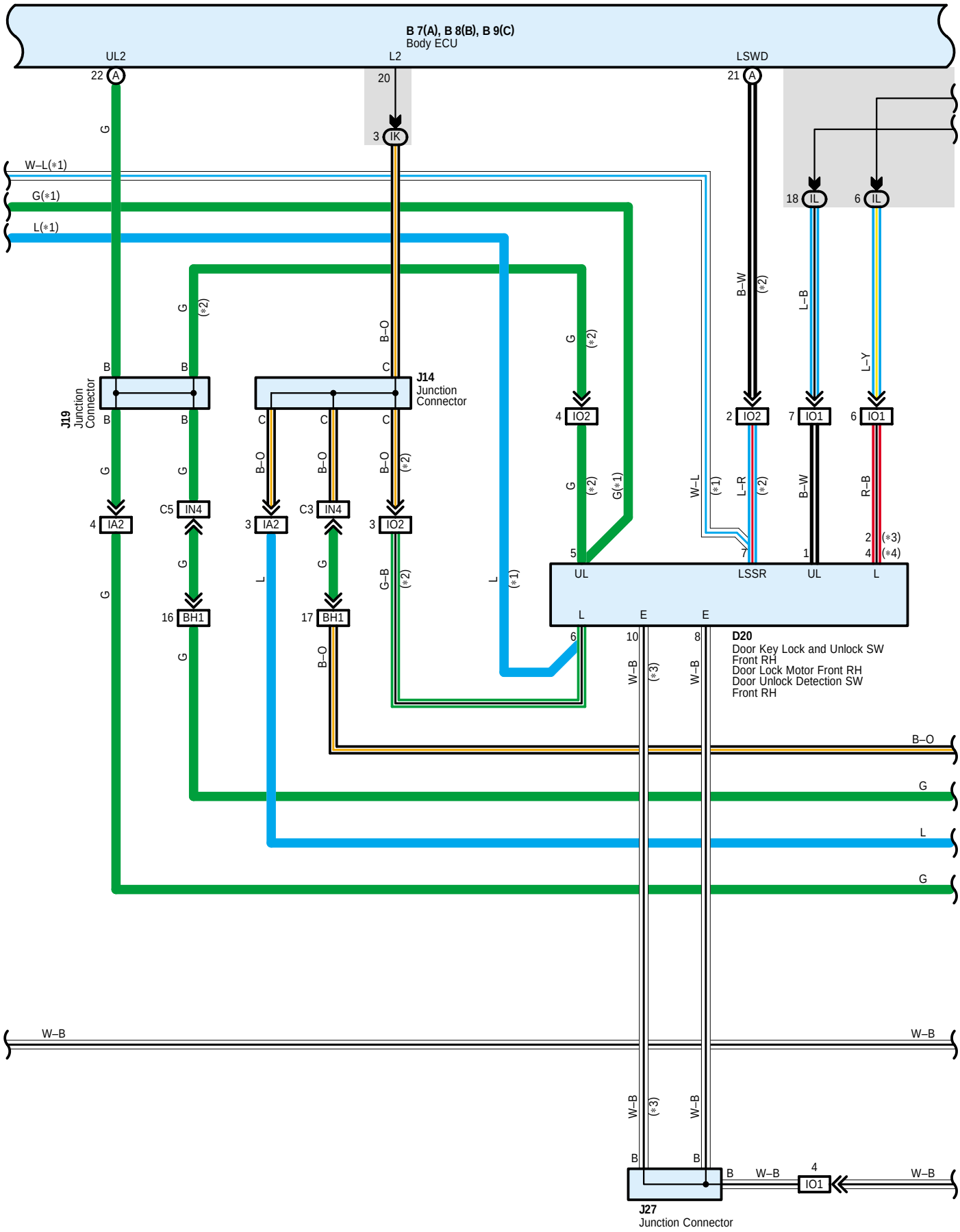
B 7(A), B 8(B), B 9(C)
Body ECU
UL2
L2
LSWD
22 A
20
21 A
3 IK
18 IL
6 IL
W–L(*1)
G(*1)
L(*1)
J19
Junction
Connector
J14
Junction
Connector
4 IA2
C5 IN4
3 IA2
C3 IN4
3 IO2
4 IO2
2 IO2
7 IO1
6 IO1
16 BH1
17 BH1
5 UL
7 LSSR
1 UL
L
D20
Door Key Lock and Unlock SW
Front RH
Door Lock Motor Front RH
Door Unlock Detection SW
Front RH
B–O
G
L
W–B
J27
Junction Connector
4 IO1

Wireless Door Lock Control (RHD)

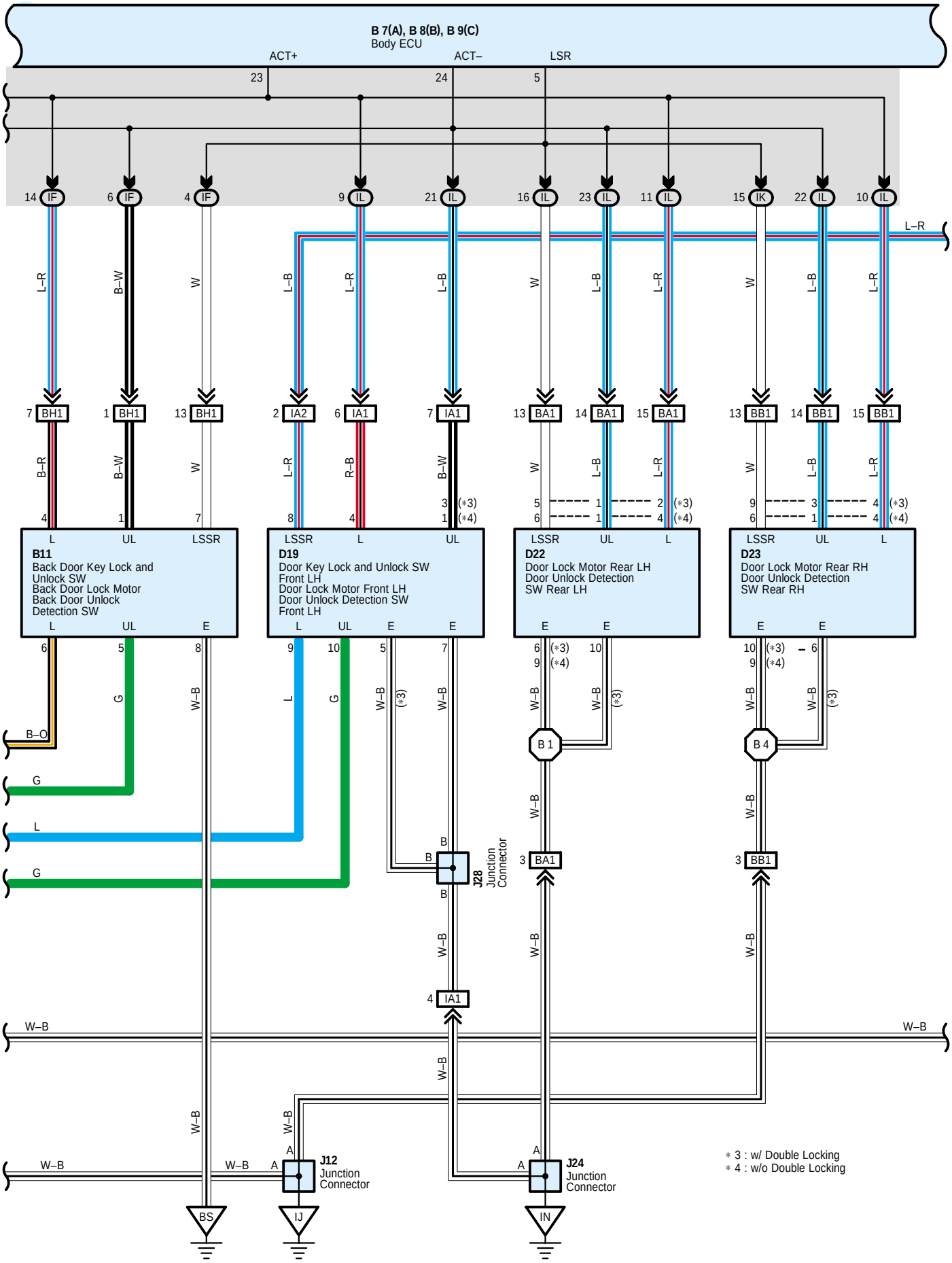

From Power Source System (See Page 128)

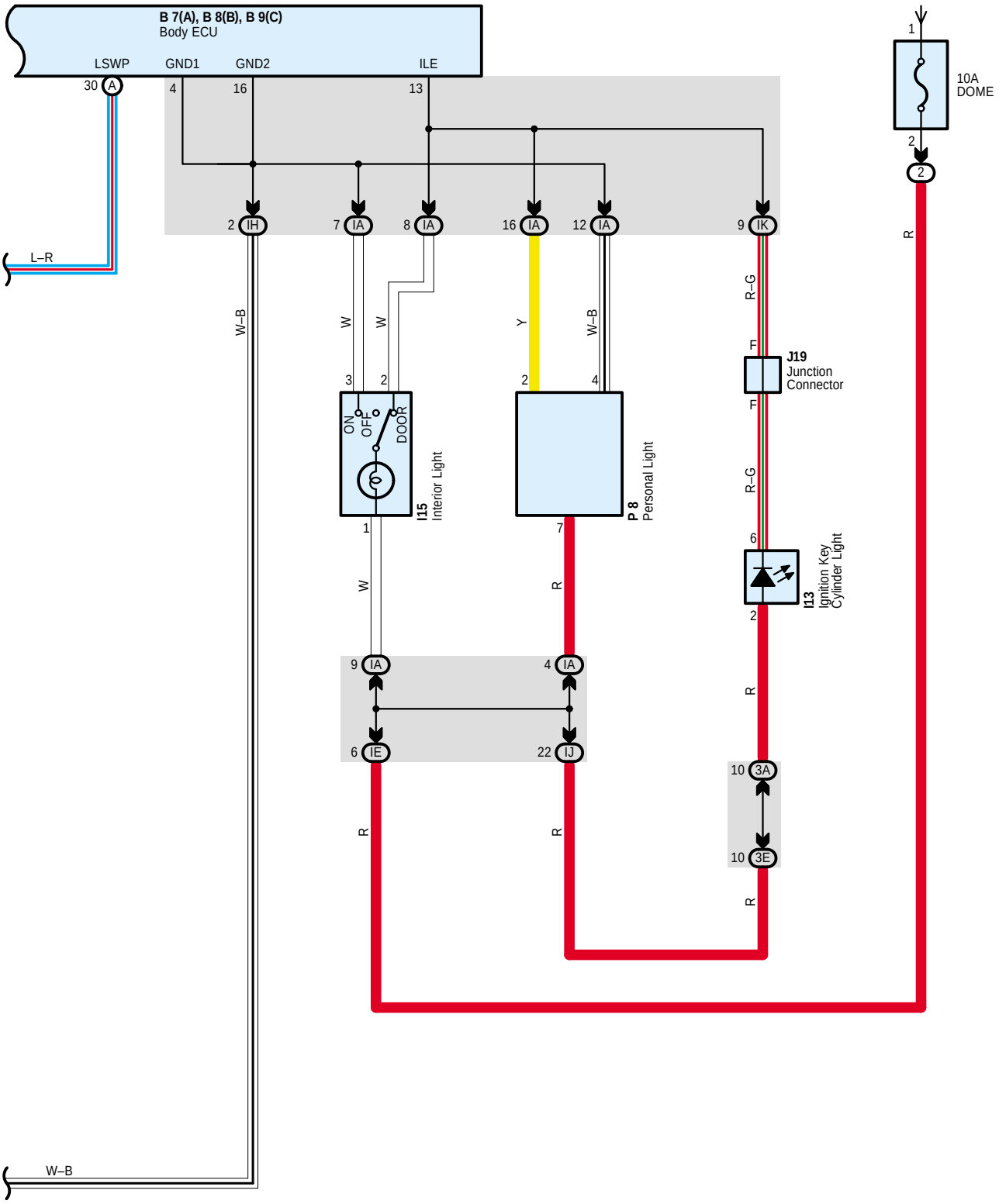

Wireless Door Lock Control (RHD)

System Outline

Door lock control (Lock and unlock) and panic control (Theft alarm and flash) is performed by remote control, without the ignition key inserted in the door key cylinder, using low-power electrical waves emitted by a transmitter.

1. Normal Operation

* Lock operation
  When the lock SW on the transmitter is pressed, all the doors are locked.
* Unlock operation
  When the unlock SW on the transmitter is pressed, all the doors are unlocked.

2. Auto Lock Function

When the door is not actually opened within 30 seconds after the door has been unlocked by the unlock SW on the transmitter, all the doors are automatically locked. If any of the following conditions are detected, the wireless door lock does not function.

* Any door is opened.
* The ignition key is inserted into the ignition SW.
* When the lock detection SW of all the doors are locked.

3. Wireless Door Lock Stop Function

If any of the following conditions are detected, the wireless door lock does not function.

Lock operation

* When any door is open (Door courtesy SW on)
* The ignition key is inserted into the ignition SW (Unlock warning SW on)
* Ignition SW is on

Unlock operation

* Ignition SW is on
* The ignition key is inserted into the ignition SW (Unlock warning SW on)

4. Visual Confirmation of Lock or Unlock

During lock operation, when the body ECU receives a lock signal from the door lock detection SW, the turn signal light is flashed once. During unlock operation, when the body ECU receives an unlock signal from the door lock detection SW, the turn signal light is flashed twice.

5. Repeat Function

If the lock detection signal in response to the output signal is not received after the body ECU has output the lock signal, the lock signal is output again.

6. Illuminated Entry Function

When the body ECU detects the unlock state after the unlock operation has been made, it turns on the lights, such as the ignition key cylinder light and interior light for approx. 15 sec. If all the doors are locked during this operation, lighting is cancelled and the lights immediately fade out.

Service Hints

Body ECU

11, 12-Ground : Always approx. 12 volts
10-Ground : Approx. 12 volts with ignition SW at ON position
22-Ground : Approx. 12 volts with ignition SW at ACC or ON position
4, 16-Ground : Always continuity

: Parts Location

Code		See Page	Code	See Page	Code	See Page
B7	A	68 (RHD)	D19	74 (*16)	J27	72 (*15)
B8	B	68 (RHD)	D20	72 (*15)		74 (*16)
B9	C	68 (RHD)		74 (*16)	J28	72 (*15)
B10		72 (*15)	D21	72 (*15)		74 (*16)
		74 (*16)		74 (*16)	J29	72 (*15)
B11		72 (*15)	D22	72 (*15)		74 (*16)
		74 (*16)	D23	72 (*15)	J30	72 (*15)
D10		72 (*15)	I13	70 (RHD)		74 (*16)
		74 (*16)	I15	72 (*15)	J31	72 (*15)
D15		72 (*15)		74 (*16)		74 (*16)
		74 (*16)	J12	70 (RHD)	K2	70 (RHD)
D16		72 (*15)	J14	70 (RHD)	P8	73 (*15)
		74 (*16)	J15	70 (RHD)		75 (*16)
D17		72 (*15)	J17	70 (RHD)	T10	71 (RHD)
D18		72 (*15)	J19	70 (RHD)		
D19		72 (*15)	J24	70 (RHD)		

: Relay Blocks

Code	See Page	Relay Blocks (Relay Block Location)
2	23	Engine Room R/B (Engine Compartment Left)

: Junction Block and Wire Harness Connector

Code	See Page	Junction Block and Wire Harness (Connector Location)
IA	28 (RHD)	Roof Wire and Driver Side J/B (Lower Finish Panel)
IB	28 (RHD)	Engine Room Main Wire and Driver Side J/B (Lower Finish Panel)
IE		
IF	28 (RHD)	Floor Wire and Driver Side J/B (Lower Finish Panel)
IH	29 (RHD)	Instrument Panel Wire and Driver Side J/B (Lower Finish Panel)
IJ		
IK		
IL		
1A	32 (RHD)	Instrument Panel Wire and J/B No.1 (Instrument Panel Reinforcement Right)
1B		
1C		
1D		
1E		
2A	34	Instrument Panel Wire and J/B No.2 (Instrument Panel Reinforcement Center)
2E		
3A	36 (RHD)	Instrument Panel Wire and J/B No.3 (Instrument Panel Reinforcement Left)
3E		

* 1 : LHD 1GR-FE * 2 : LHD 3RZ-FE * 3 : LHD 1KD-FTV * 4 : LHD 1KZ-TE * 5 : LHD 5L-E * 6 : LHD 5-Door * 7 : LHD 3-Door
* 8 : LHD 8Way Power Seat * 9 : LHD Except 8Way Power Seat * 10 : RHD 1GR-FE * 11 : RHD 3RZ-FE * 12 : RHD 1KD-FTV
* 13 : RHD 1KZ-TE * 14 : RHD 5L-E * 15 : RHD 5-Door * 16 : RHD 3-Door * 17 : RHD 8Way Power Seat
* 18 : RHD Except 8Way Power Seat

: Connector Joining Wire Harness and Wire Harness

Code	See Page	Joining Wire Harness and Wire Harness (Connector Location)
IA1	112 (RHD)	Front Door LH Wire and Instrument Panel Wire (Left Kick Panel)
IA2		
IC4	112 (RHD)	Instrument Panel Wire and Engine Room Main Wire (Left Kick Panel)
ID1	114 (RHD)	Instrument Panel Wire and Floor No.2 Wire (Left Kick Panel)
ID2		
IF1	114 (RHD)	Instrument Panel Wire and Instrument Panel Wire (Near the J/B No.1)
IN2	118 (RHD)	Instrument Panel Wire and Floor Wire (Right Kick Panel)
IN4		
IO1	118 (RHD)	Front Door RH Wire and Instrument Panel Wire (Right Kick Panel)
IO2		
BA1	120 (*15)	Rear Door LH Wire and Instrument Panel Wire (Center Pillar LH)
BB1	120 (*15)	Rear Door RH Wire and Instrument Panel Wire (Center Pillar RH)
BH1	122 (*15)	Back Door No.1 Wire and Floor Wire (Right Quarter Panel Inner)
	124 (*16)	

: Ground Points

Code	See Page	Ground Points Location
IJ	112 (RHD)	Right Kick Panel
IL	112 (RHD)	Instrument Panel Brace RH
IN	112 (RHD)	Left Kick Panel
BR	120 (*15)	Left Quarter Panel Inner
	124 (*16)	
BS	120 (*15)	Back Door Panel Center
	124 (*16)	

: Splice Points

Code	See Page	Wire Harness with Splice Points	Code	See Page	Wire Harness with Splice Points
B1	122 (*15)	Rear Door No.1 Wire LH	B4	122 (*15)	Rear Door No.1 Wire RH

* 1 : LHD 1GR-FE * 2 : LHD 3RZ-FE * 3 : LHD 1KD-FTV * 4 : LHD 1KZ-TE * 5 : LHD 5L-E * 6 : LHD 5-Door * 7 : LHD 3-Door
* 8 : LHD 8Way Power Seat * 9 : LHD Except 8Way Power Seat * 10 : RHD 1GR-FE * 11 : RHD 3RZ-FE * 12 : RHD 1KD-FTV
* 13 : RHD 1KZ-TE * 14 : RHD 5L-E * 15 : RHD 5-Door * 16 : RHD 3-Door * 17 : RHD 8Way Power Seat
* 18 : RHD Except 8Way Power Seat

Option Connector (Wireless Door Lock Control)

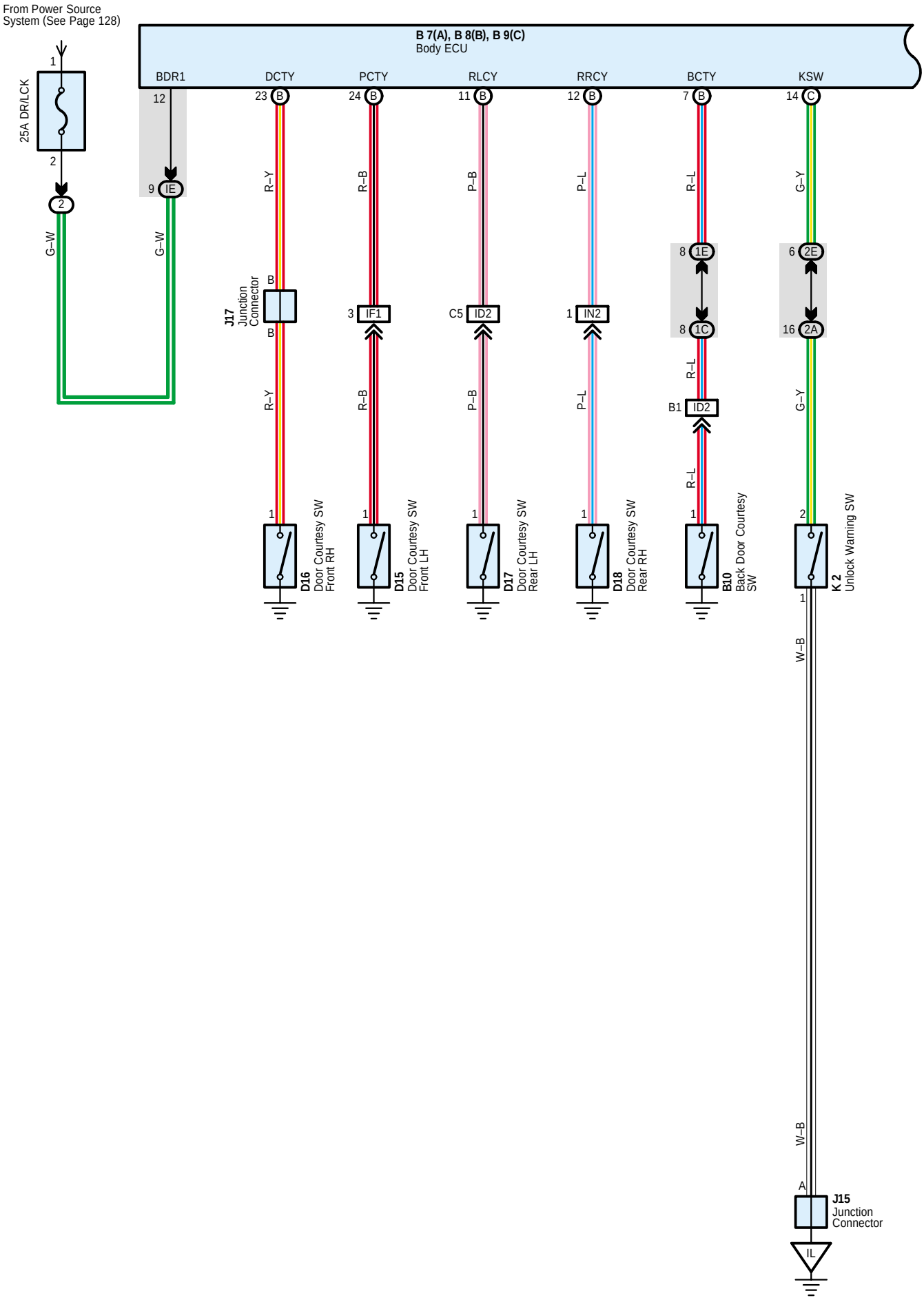

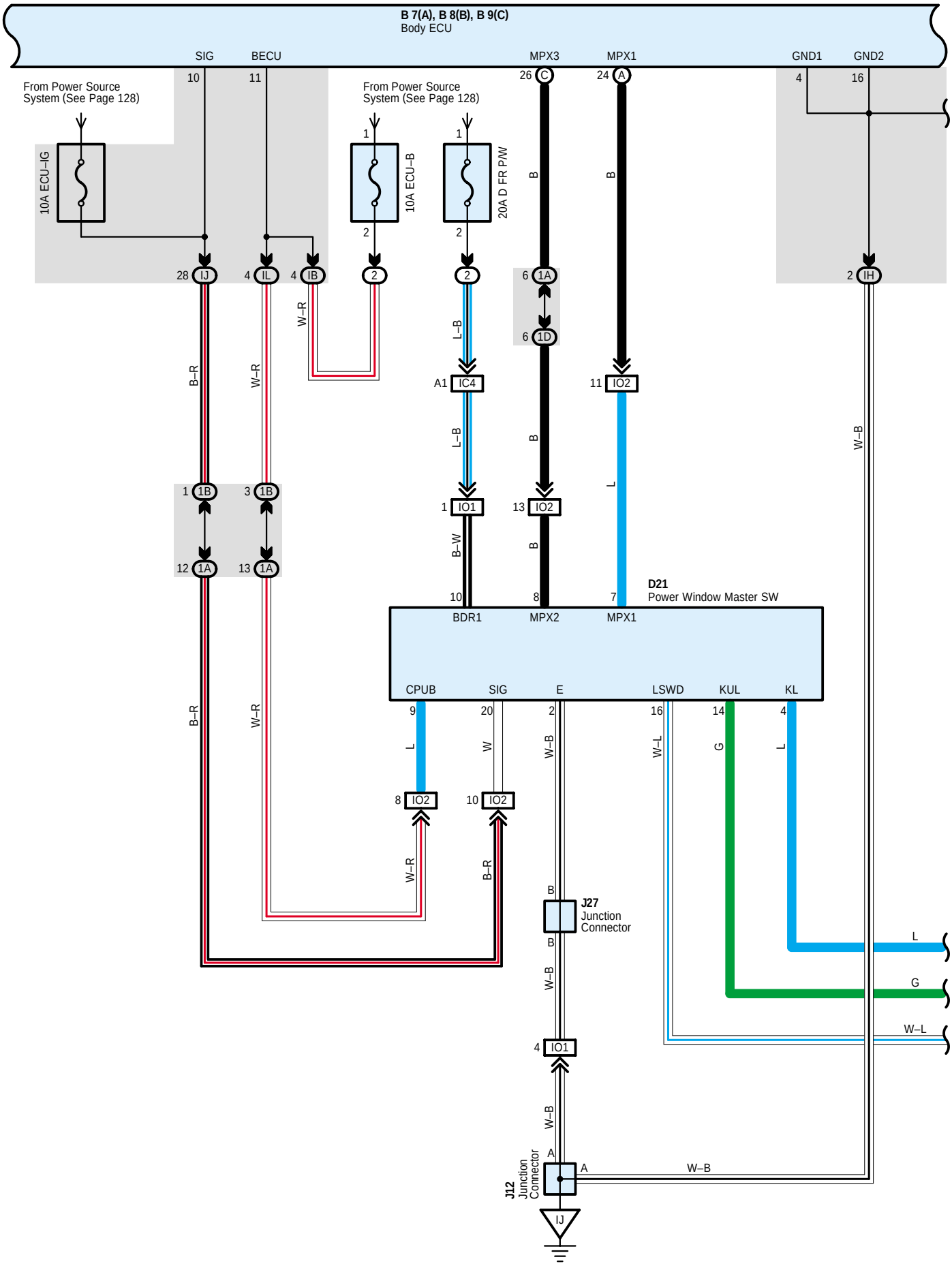
B 7(A), B 8(B), B 9(C)
Body ECU
SIG
BECU
MPX3
MPX1
GND1
GND2
From Power Source System (See Page 128)
From Power Source System (See Page 128)
10A ECU–IG
10A ECU–B
20A D FR P/W
D21
Power Window Master SW
BDR1
MPX2
MPX1
CPUB
SIG
E
LSWD
KUL
KL
J27
Junction Connector
J12
Junction Connector

Option Connector (Wireless Door Lock Control)

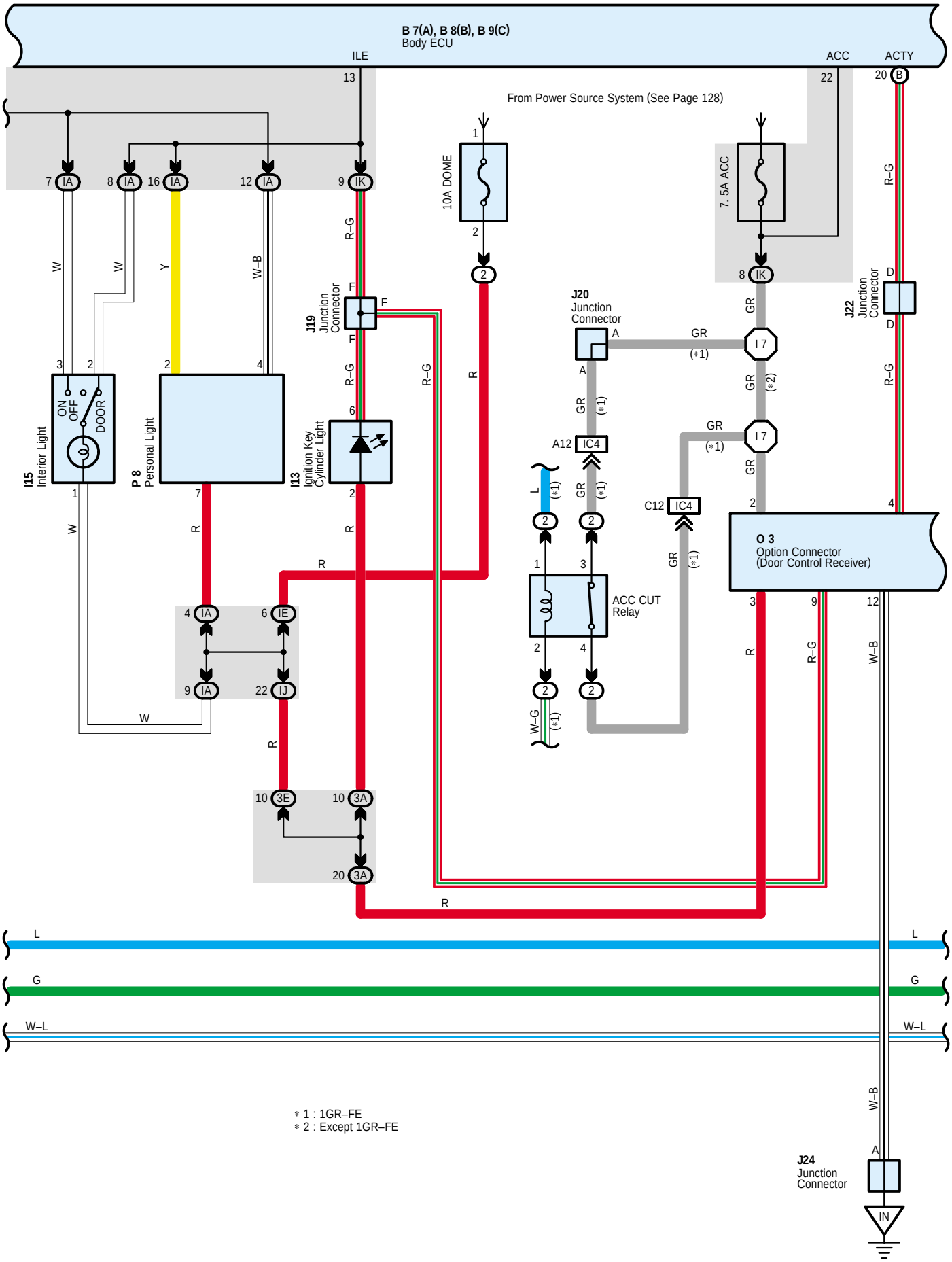

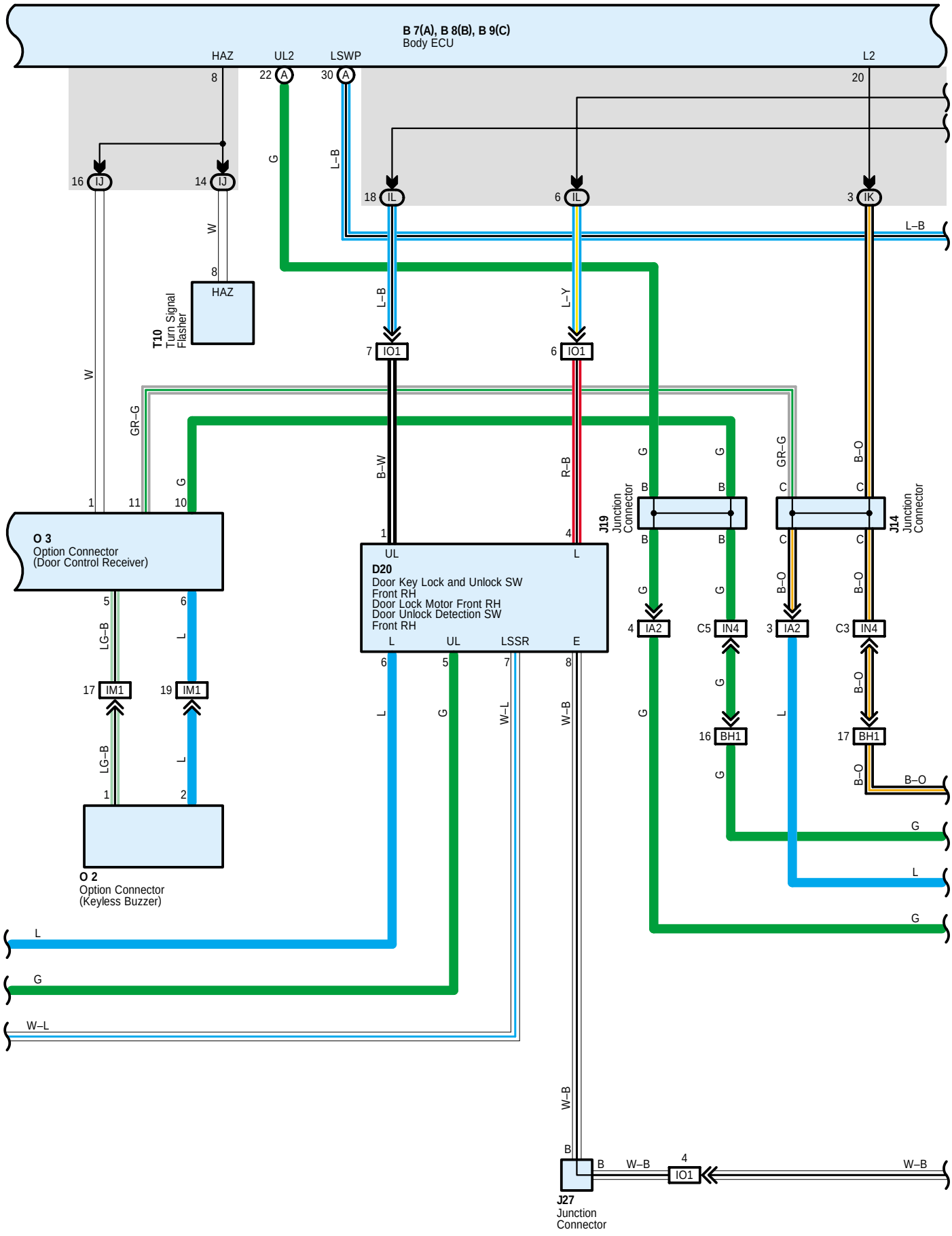
B 7(A), B 8(B), B 9(C)
Body ECU
HAZ
UL2
LSWP
L2
T10
Turn Signal
Flasher
O 3
Option Connector
(Door Control Receiver)
D20
Door Key Lock and Unlock SW
Front RH
Door Lock Motor Front RH
Door Unlock Detection SW
Front RH
J19
Junction
Connector
J14
Junction
Connector
O 2
Option Connector
(Keyless Buzzer)
J27
Junction
Connector

Option Connector (Wireless Door Lock Control)

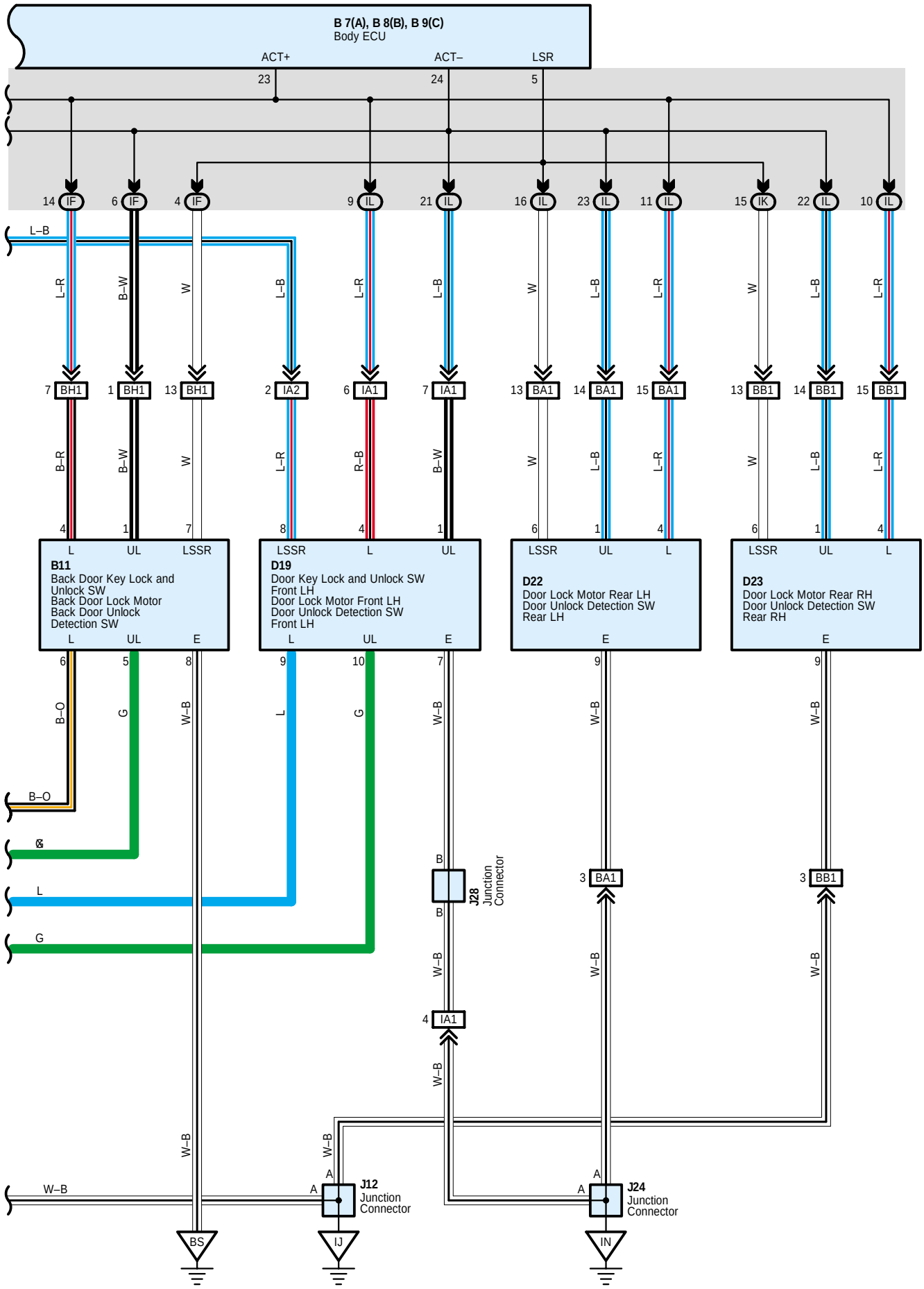

Service Hints

O3 Option Connector (Door Control Receiver)

3–Ground : Always approx. 12 volts
12–Ground : Always continuity
2–Ground : Approx. 12 volts with the ignition SW at ACC or ON position

: Parts Location

Code		See Page	Code	See Page	Code	See Page
B7	A	68 (RHD)	D20	72 (*15)	J22	70 (RHD)
B8	B	68 (RHD)		74 (*16)	J24	70 (RHD)
B9	C	68 (RHD)	D21	72 (*15)	J27	72 (*15)
B10		72 (*15)		74 (*16)		74 (*16)
		74 (*16)	D22	72 (*15)	J28	72 (*15)
B11		72 (*15)	D23	72 (*15)		74 (*16)
		74 (*16)	I13	70 (RHD)	K2	70 (RHD)
D15		72 (*15)	I15	72 (*15)	O2	61 (*11)
		74 (*16)		74 (*16)		63 (*12)
D16		72 (*15)	J12	70 (RHD)		65 (*13)
		74 (*16)	J14	70 (RHD)	O3	71 (RHD)
D17		72 (*15)	J15	70 (RHD)	P8	73 (*15)
D18		72 (*15)	J17	70 (RHD)		75 (*16)
D19		72 (*15)	J19	70 (RHD)	T10	71 (RHD)
		74 (*16)	J20	70 (RHD)		

: Relay Blocks

Code	See Page	Relay Blocks (Relay Block Location)
2	23	Engine Room R/B (Engine Compartment Left)

: Junction Block and Wire Harness Connector

Code	See Page	Junction Block and Wire Harness (Connector Location)
IA	28 (RHD)	Roof Wire and Driver Side J/B (Lower Finish Panel)
IB	28 (RHD)	Engine Room Main Wire and Driver Side J/B (Lower Finish Panel)
IE		
IF	28 (RHD)	Floor Wire and Driver Side J/B (Lower Finish Panel)
IH	29 (RHD)	Instrument Panel Wire and Driver Side J/B (Lower Finish Panel)
IJ		
IK		
IL		
1A	32 (RHD)	Instrument Panel Wire and J/B No.1 (Instrument Panel Reinforcement Right)
1B		
1C		
1D		
1E		
2A	34	Instrument Panel Wire and J/B No.2 (Instrument Panel Reinforcement Center)
2E		
3A	36 (RHD)	Instrument Panel Wire and J/B No.3 (Instrument Panel Reinforcement Left)
3E		

* 1 : LHD 1GR–FE * 2 : LHD 3RZ–FE * 3 : LHD 1KD–FTV * 4 : LHD 1KZ–TE * 5 : LHD 5L–E * 6 : LHD 5–Door * 7 : LHD 3–Door
* 8 : LHD 8Way Power Seat * 9 : LHD Except 8Way Power Seat * 10 : RHD 1GR–FE * 11 : RHD 3RZ–FE * 12 : RHD 1KD–FTV
* 13 : RHD 1KZ–TE * 14 : RHD 5L–E * 15 : RHD 5–Door * 16 : RHD 3–Door * 17 : RHD 8Way Power Seat
* 18 : RHD Except 8Way Power Seat

Option Connector (Wireless Door Lock Control)

: Connector Joining Wire Harness and Wire Harness

Code	See Page	Joining Wire Harness and Wire Harness (Connector Location)
IA1	112 (RHD)	Front Door LH Wire and Instrument Panel Wire (Left Kick Panel)
IA2		
IC4	112 (RHD)	Instrument Panel Wire and Engine Room Main Wire (Left Kick Panel)
ID2	114 (RHD)	Instrument Panel Wire and Floor No.2 Wire (Left Kick Panel)
IF1	114 (RHD)	Instrument Panel Wire and Instrument Panel Wire (Near the J/B No.1)
IM1	116 (RHD)	Instrument Panel Wire and Engine Room Main Wire (Right Kick Panel)
IN2	118 (RHD)	Instrument Panel Wire and Floor Wire (Right Kick Panel)
IN4		
IO1	118 (RHD)	Front Door RH Wire and Instrument Panel Wire (Right Kick Panel)
IO2		
BA1	120 (*15)	Rear Door LH Wire and Instrument Panel Wire (Center Pillar LH)
BB1	120 (*15)	Rear Door RH Wire and Instrument Panel Wire (Center Pillar RH)
BH1	122 (*15)	Back Door No.1 Wire and Floor Wire (Right Quarter Panel Inner)
	124 (*16)	

: Ground Points

Code	See Page	Ground Points Location
IJ	112 (RHD)	Right Kick Panel
IL	112 (RHD)	Instrument Panel Brace RH
IN	112 (RHD)	Left Kick Panel
BS	120 (*15)	Back Door Panel Center
	124 (*16)	

: Splice Points

Code	See Page	Wire Harness with Splice Points	Code	See Page	Wire Harness with Splice Points
I7	114 (RHD)	Instrument Panel Wire			

* 1 : LHD 1GR-FE * 2 : LHD 3RZ-FE * 3 : LHD 1KD-FTV * 4 : LHD 1KZ-TE * 5 : LHD 5L-E * 6 : LHD 5-Door * 7 : LHD 3-Door
* 8 : LHD 8Way Power Seat * 9 : LHD Except 8Way Power Seat * 10 : RHD 1GR-FE * 11 : RHD 3RZ-FE * 12 : RHD 1KD-FTV
* 13 : RHD 1KZ-TE * 14 : RHD 5L-E * 15 : RHD 5-Door * 16 : RHD 3-Door * 17 : RHD 8Way Power Seat
* 18 : RHD Except 8Way Power Seat

Door Lock Control and Theft Deterrent (LHD)

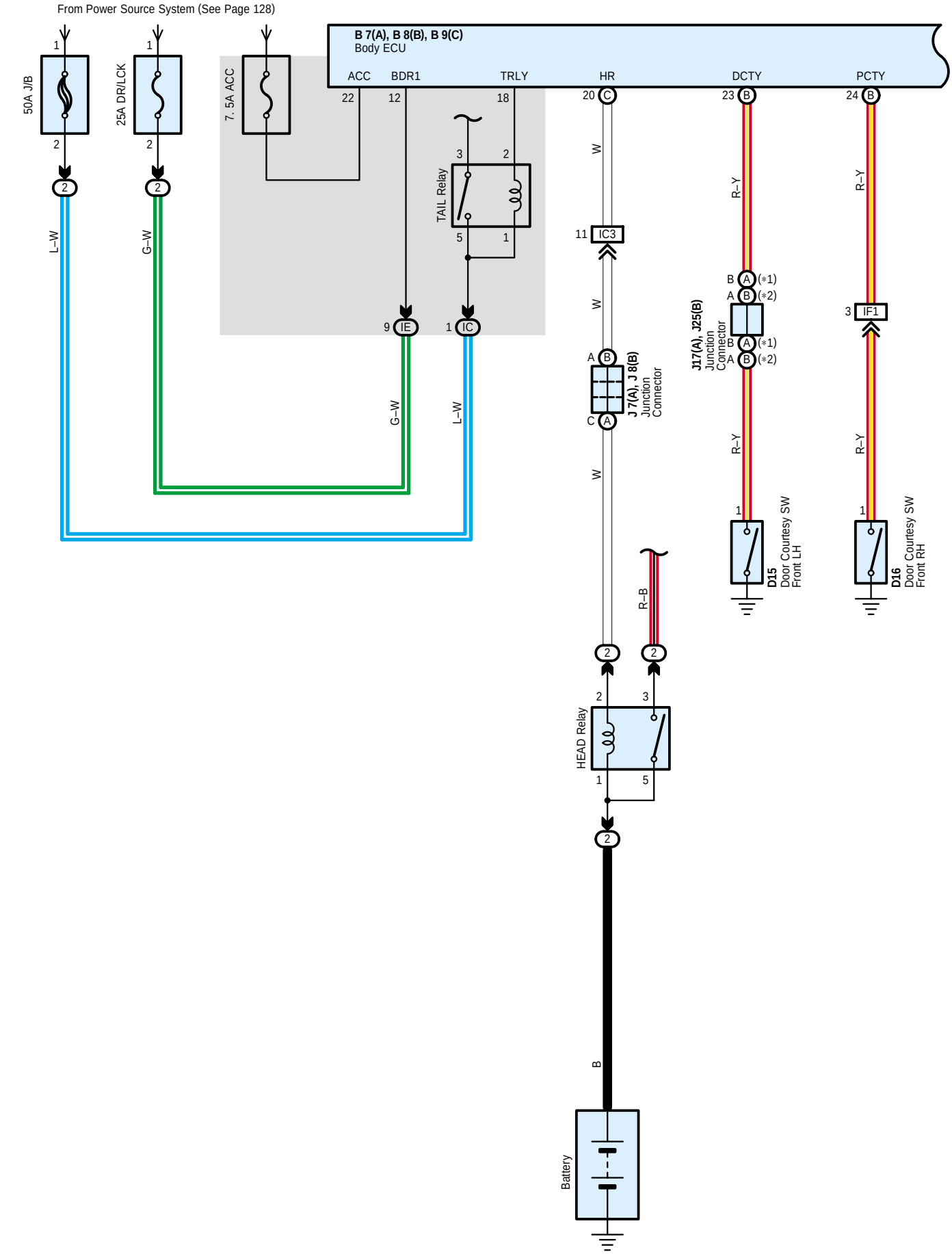

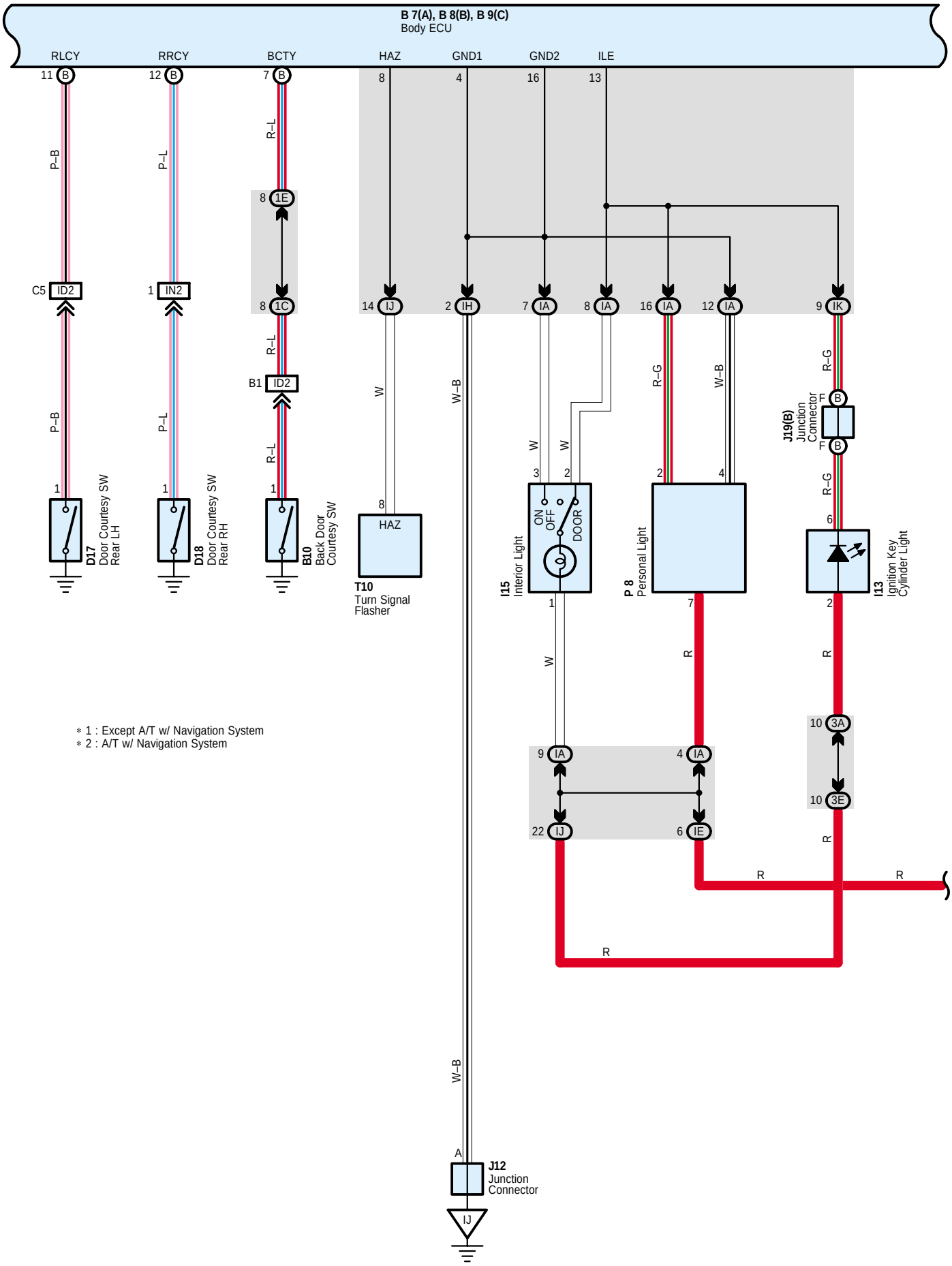
B 7(A), B 8(B), B 9(C)
Body ECU
RLCY
RRCY
BCTY
HAZ
GND1
GND2
ILE
D17
Door Courtesy SW
Rear LH
D18
Door Courtesy SW
Rear RH
B10
Back Door
Courtesy SW
T10
Turn Signal
Flasher
I15
Interior Light
P 8
Personal Light
J19(B)
Junction
Connector
I13
Ignition Key
Cylinder Light
J12
Junction
Connector
ON
OFF
DOOR
HAZ
* 1 : Except A/T w/ Navigation System
* 2 : A/T w/ Navigation System

Door Lock Control and Theft Deterrent (LHD)

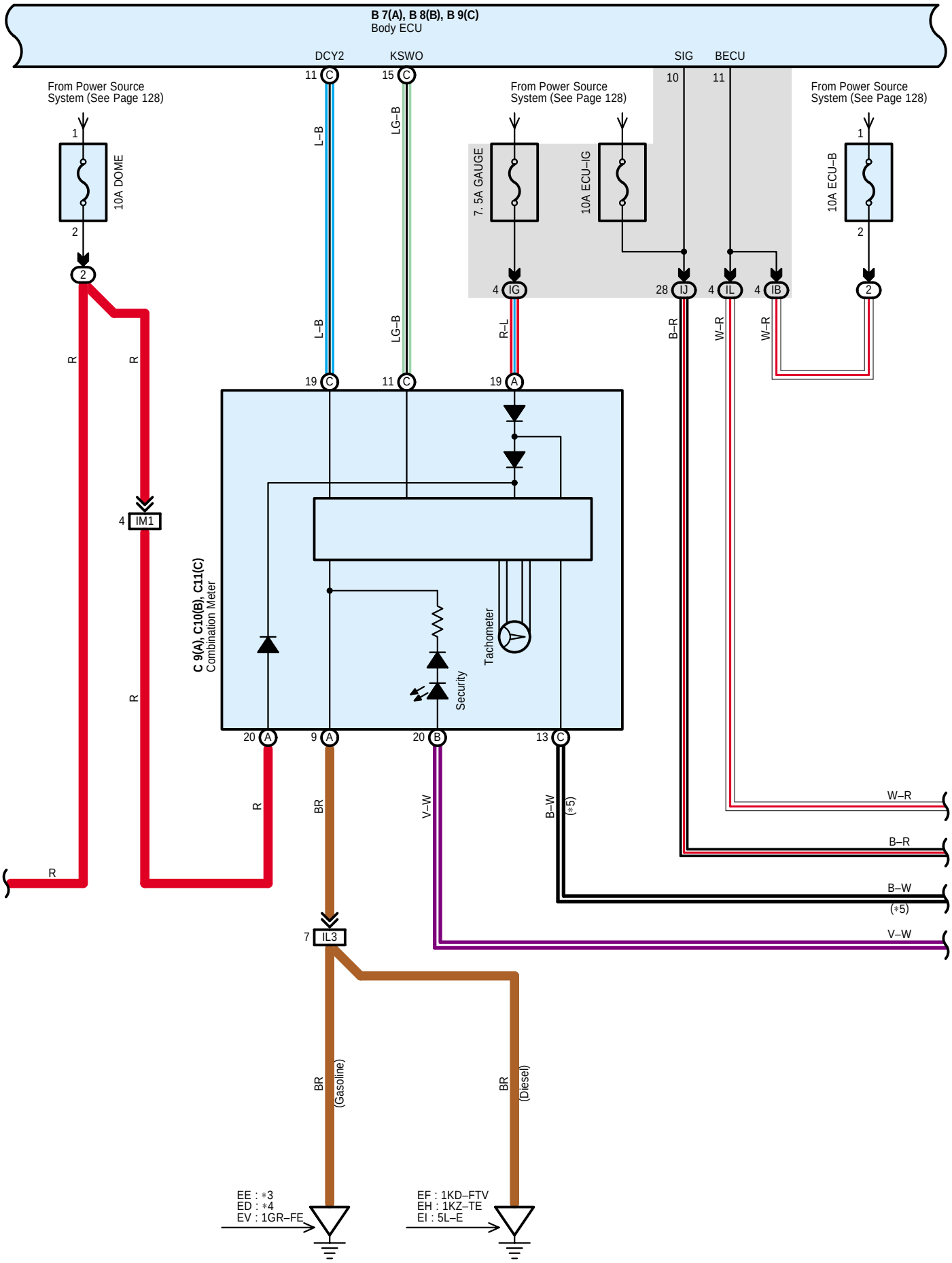

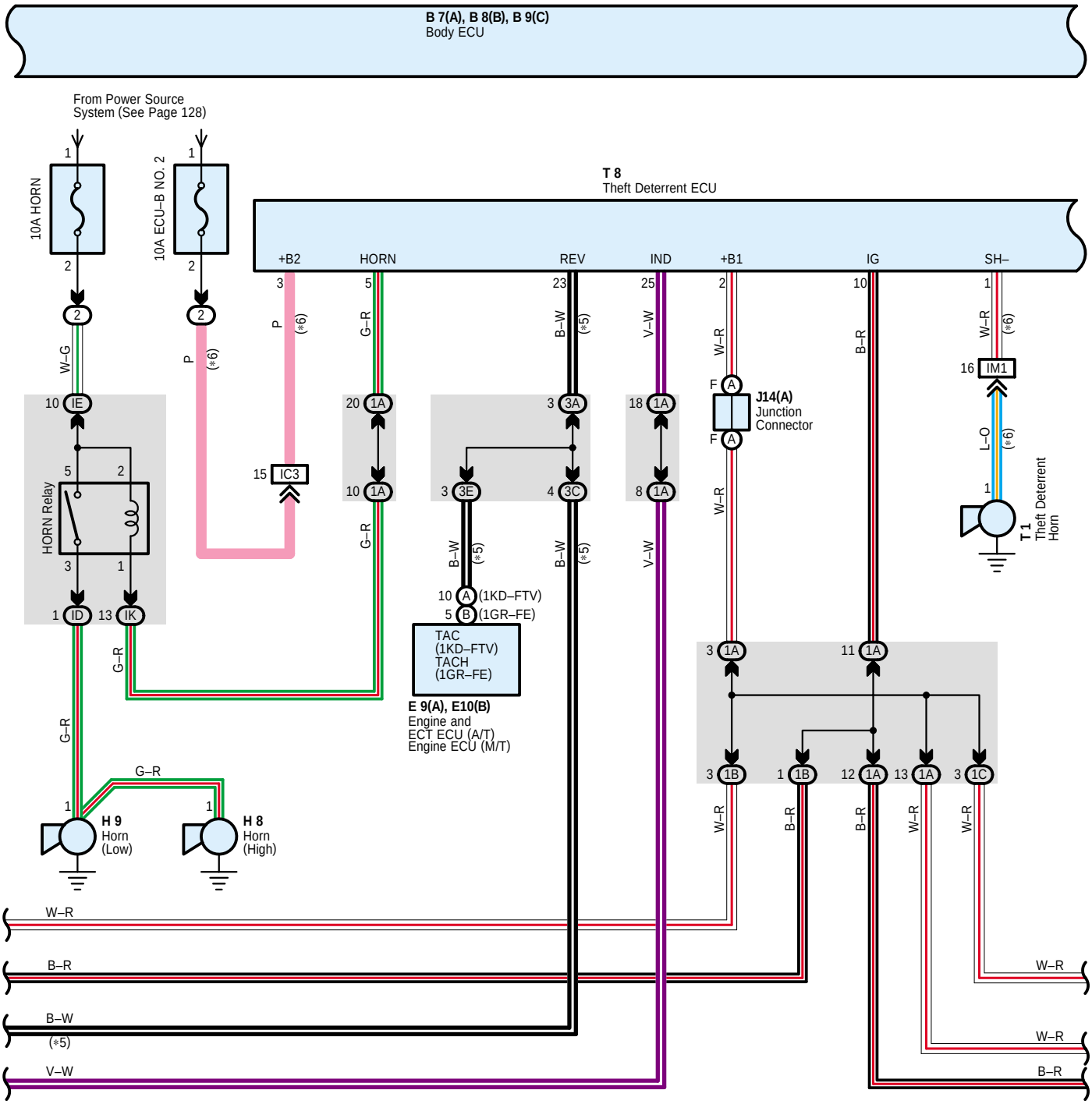

* 3 : 3RZ–FE Unleaded Gasoline
* 4 : 3RZ–FE Leaded Gasoline
* 5 : Europe
* 6 : Except Europe

Door Lock Control and Theft Deterrent (LHD)

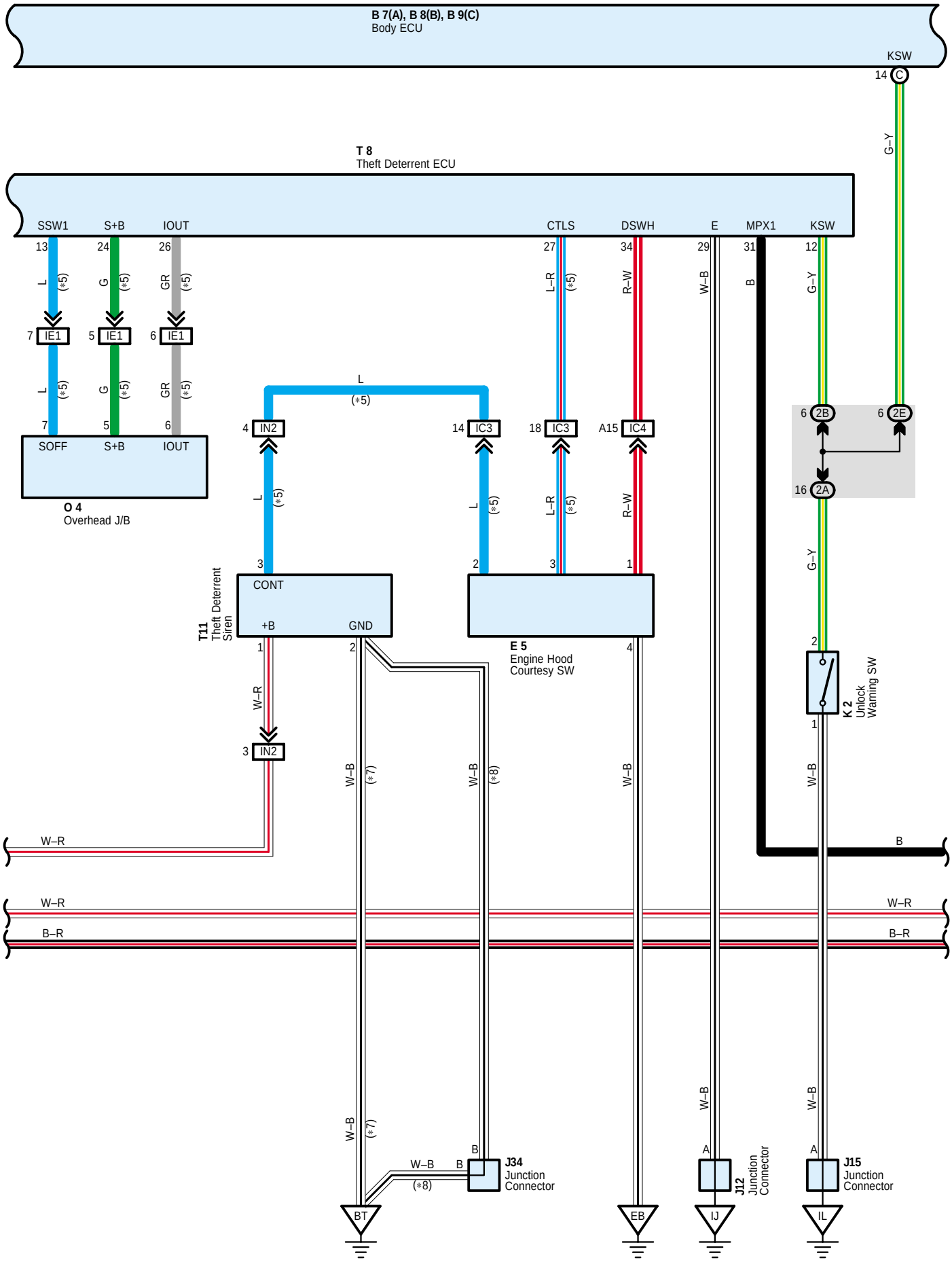

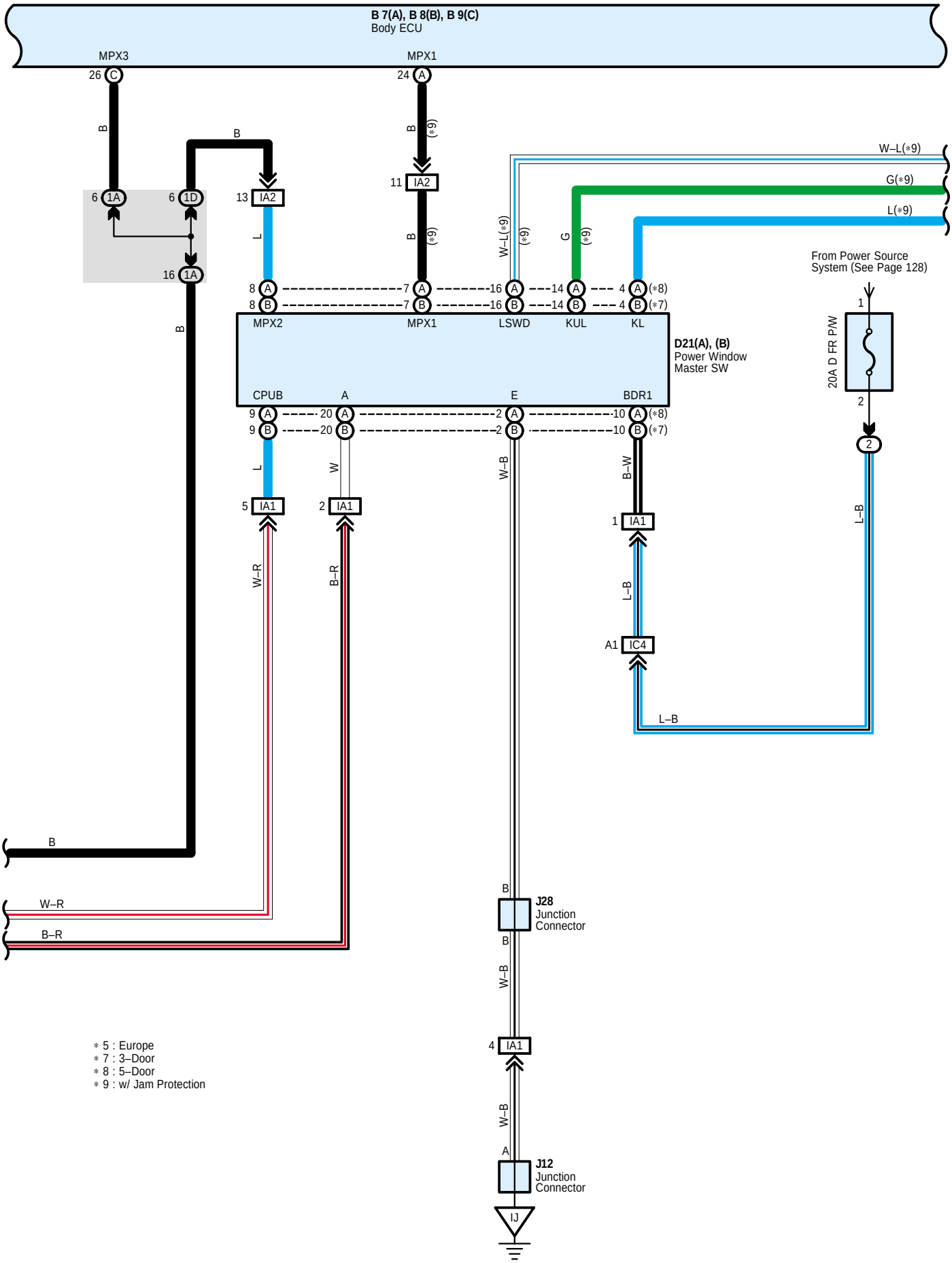
B 7(A), B 8(B), B 9(C)
Body ECU
MPX3
MPX1
26 C
24 A
B
B
B (*9)
11 IA2
6 1A
6 1D
13 IA2
16 1A
L
B (*9)
W–L(*9) (*9)
G (*9)
W–L(*9)
G(*9)
L(*9)
From Power Source System (See Page 128)
8 A
8 B
7 A
7 B
16 A
16 B
14 A
14 B
4 A (*8)
4 B (*7)
MPX2
MPX1
LSWD
KUL
KL
D21(A), (B)
Power Window Master SW
CPUB
A
E
BDR1
9 A
9 B
20 A
20 B
2 A
2 B
10 A (*8)
10 B (*7)
1
20A D FR P/W
2
2
L
W
W–B
B–W
L–B
5 IA1
2 IA1
1 IA1
W–R
B–R
L–B
A1 IC4
L–B
B
W–R
B–R
B
J28
Junction Connector
B
W–B
4 IA1
W–B
A
J12
Junction Connector
IJ
* 5 : Europe
* 7 : 3–Door
* 8 : 5–Door
* 9 : w/ Jam Protection

Door Lock Control and Theft Deterrent (LHD)

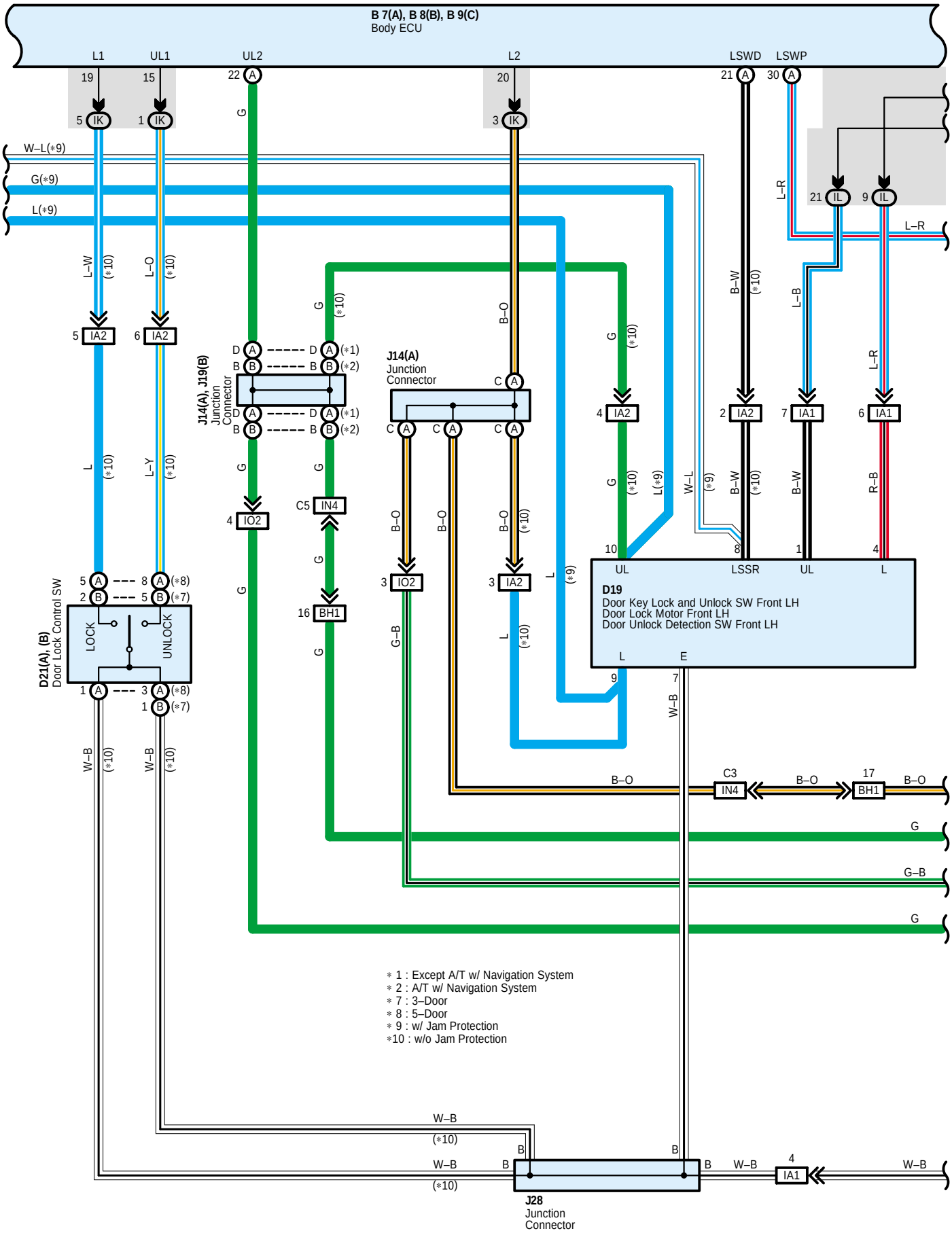

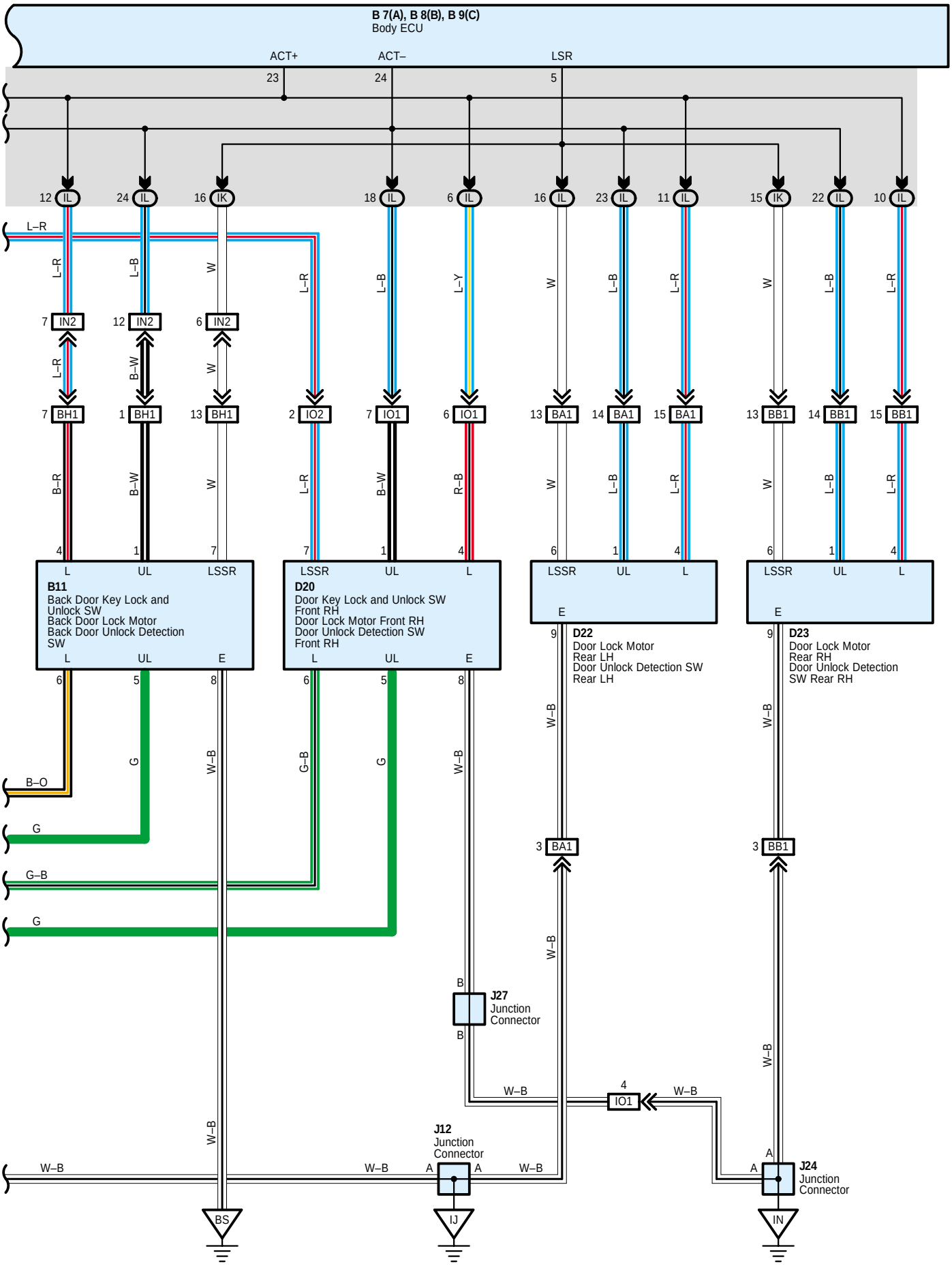
B 7(A), B 8(B), B 9(C)
Body ECU
ACT+
ACT–
LSR
23
24
5
12 IL
24 IL
16 IK
18 IL
6 IL
16 IL
23 IL
11 IL
15 IK
22 IL
10 IL
L–R
L–R
L–B
W
L–R
L–B
L–Y
W
L–B
L–R
W
L–B
L–R
7 IN2
12 IN2
6 IN2
L–R
B–W
W
7 BH1
1 BH1
13 BH1
2 IO2
7 IO1
6 IO1
13 BA1
14 BA1
15 BA1
13 BB1
14 BB1
15 BB1
B–R
B–W
W
L–R
B–W
R–B
W
L–B
L–R
W
L–B
L–R
4
1
7
7
1
4
6
1
4
6
1
4
L
UL
LSSR
B11
Back Door Key Lock and Unlock SW
Back Door Lock Motor
Back Door Unlock Detection SW
L
UL
E
LSSR
UL
L
D20
Door Key Lock and Unlock SW Front RH
Door Lock Motor Front RH
Door Unlock Detection SW Front RH
L
UL
E
LSSR
UL
L
E
9
D22
Door Lock Motor Rear LH
Door Unlock Detection SW Rear LH
LSSR
UL
L
E
9
D23
Door Lock Motor Rear RH
Door Unlock Detection SW Rear RH
6
5
8
6
5
8
B–O
G
W–B
G–B
G
W–B
W–B
W–B
G
G–B
G
3 BA1
3 BB1
W–B
B
J27
Junction Connector
B
W–B
4
IO1
W–B
W–B
J12
Junction Connector
W–B
W–B
A
A
W–B
A
A
J24
Junction Connector
BS
IJ
IN

Door Lock Control and Theft Deterrent (LHD)

System Outline

The door lock control is controlled through the various signals input into the body ECU through communication control of the body ECU etc.

1. Manual Unlock Operation

When the door lock control SW of the driver's side door is pushed to UNLOCK, the door lock will unlock.

2. Manual Lock Operation

When the door lock control SW of the driver's side door is pushed to LOCK, the door lock will lock.

3. Door Key Unlock Operation

When the driver's or front passenger's side door or back door is unlocked using the ignition key, all the other doors are unlocked, too.

4. Ignition Key Reminder Operation

When the door lock operation is made using the door knob with the ignition key remained inserted in the key cylinder and the door open, unlock operation is automatically made. Additionally, if lock operation is made with the door lock control SW or door key lock and unlock SW, unlock operation is automatically made after the lock operation has been completed.

Service Hints

Body ECU

11, 12–Ground : Always approx. 12 volts
10–Ground : Approx. 12 volts with ignition SW at ON position
22–Ground : Approx. 12 volts with ignition SW at ACC or ON position
4, 16–Ground : Always continuity

○ : **Parts Location**

Code		See Page	Code		See Page	Code		See Page
B7	A	48 (LHD)	E5		38 (*1)	J15		50 (LHD)
B8	B	48 (LHD)			40 (*2)	J17	A	50 (LHD)
B9	C	48 (LHD)			42 (*3)	J19	B	50 (LHD)
B10		52 (*6)			44 (*4)	J24		50 (LHD)
		54 (*7)			46 (*5)	J25	B	50 (LHD)
B11		52 (*6)	E9	A	49 (LHD)	J27		52 (*6)
		54 (*7)	E10	B	49 (LHD)			54 (*7)
C9	A	49 (LHD)	H8		39 (*1)	J28		52 (*6)
C10	B	49 (LHD)			41 (*2)			54 (*7)
C11	C	49 (LHD)			43 (*3)	J34		52 (*6)
D15		52 (*6)			45 (*4)	K2		50 (LHD)
		54 (*7)			47 (*5)	O4		53 (*6)
D16		52 (*6)	H9		39 (*1)			55 (*7)
		54 (*7)			41 (*2)	P8		53 (*6)
D17		52 (*6)			43 (*3)			55 (*7)
D18		52 (*6)			45 (*4)	T1		39 (*1)
D19		52 (*6)			47 (*5)			41 (*2)
		54 (*7)	I13		50 (LHD)			43 (*3)
D20		52 (*6)	I15		52 (*6)			45 (*4)
		54 (*7)			54 (*7)			47 (*5)
D21	A	52 (*6)	J7	A	50 (LHD)	T8		51 (LHD)
	B	54 (*7)	J8	B	50 (LHD)	T10		51 (LHD)
D22		52 (*6)	J12		50 (LHD)	T11		53 (*6)
D23		52 (*6)	J14	A	50 (LHD)			55 (*7)

* 1 : LHD 1GR–FE * 2 : LHD 3RZ–FE * 3 : LHD 1KD–FTV * 4 : LHD 1KZ–TE * 5 : LHD 5L–E * 6 : LHD 5–Door * 7 : LHD 3–Door
* 8 : LHD 8Way Power Seat * 9 : LHD Except 8Way Power Seat * 10 : RHD 1GR–FE * 11 : RHD 3RZ–FE * 12 : RHD 1KD–FTV
* 13 : RHD 1KZ–TE * 14 : RHD 5L–E * 15 : RHD 5–Door * 16 : RHD 3–Door * 17 : RHD 8Way Power Seat
* 18 : RHD Except 8Way Power Seat

: **Relay Blocks**

Code	See Page	Relay Blocks (Relay Block Location)
2	23	Engine Room R/B (Engine Compartment Left)

: **Junction Block and Wire Harness Connector**

Code	See Page	Junction Block and Wire Harness (Connector Location)
IA	26 (LHD)	Roof Wire and Driver Side J/B (Lower Finish Panel)
IB	26 (LHD)	Engine Room Main Wire and Driver Side J/B (Lower Finish Panel)
IC		
ID		
IE		
IG	27 (LHD)	Instrument Panel Wire and Driver Side J/B (Lower Finish Panel)
IH		
IJ		
IK		
IL		
1A	32 (LHD)	Instrument Panel Wire and J/B No.1 (Instrument Panel Reinforcement Left)
1B		
1C		
1D		
1E		
2A	34	Instrument Panel Wire and J/B No.2 (Instrument Panel Reinforcement Center)
2B		
2E		
3A	36 (LHD)	Instrument Panel Wire and J/B No.3 (Instrument Panel Reinforcement Right)
3C		
3E		

: **Connector Joining Wire Harness and Wire Harness**

Code	See Page	Joining Wire Harness and Wire Harness (Connector Location)
IA1	88 (LHD)	Front Door LH Wire and Instrument Panel Wire (Left Kick Panel)
IA2		
IC3	88 (LHD)	Instrument Panel Wire and Engine Room Main Wire (Left Kick Panel)
IC4		
ID2	90 (LHD)	Instrument Panel Wire and Floor No.2 Wire (Left Kick Panel)
IE1	90 (LHD)	Roof Wire and Instrument Panel Wire (Upper the Driver Side J/B)
IF1	90 (LHD)	Instrument Panel Wire and Instrument Panel Wire (Near the J/B No.1)
IL3	92 (LHD)	Engine Wire and Instrument Panel Wire (Right Side of the Blower Unit)
IM1	92 (LHD)	Instrument Panel Wire and Engine Room Main Wire (Right Kick Panel)
IN2	94 (LHD)	Instrument Panel Wire and Floor Wire (Right Kick Panel)
IN4		
IO1	94 (LHD)	Front Door RH Wire and Instrument Panel Wire (Right Kick Panel)
IO2		
BA1	96 (*6)	Rear Door LH Wire and Instrument Panel Wire (Center Pillar LH)
BB1	96 (*6)	Rear Door RH Wire and Instrument Panel Wire (Center Pillar RH)
BH1	98 (*6)	Back Door No.1 Wire and Floor Wire (Right Quarter Panel Inner)
	100 (*7)	

* 1 : LHD 1GR-FE * 2 : LHD 3RZ-FE * 3 : LHD 1KD-FTV * 4 : LHD 1KZ-TE * 5 : LHD 5L-E * 6 : LHD 5-Door * 7 : LHD 3-Door
* 8 : LHD 8Way Power Seat * 9 : LHD Except 8Way Power Seat * 10 : RHD 1GR-FE * 11 : RHD 3RZ-FE * 12 : RHD 1KD-FTV
* 13 : RHD 1KZ-TE * 14 : RHD 5L-E * 15 : RHD 5-Door * 16 : RHD 3-Door * 17 : RHD 8Way Power Seat
* 18 : RHD Except 8Way Power Seat

▽ : **Ground Points**

Code	See Page	Ground Points Location
EB	78 (*1)	Front Left Fender
	80 (*2)	
	82 (*3)	
	84 (*4)	
	86 (*5)	
ED	80 (*2)	Ignition Coil Bracket
EE	80 (*2)	Intake Manifold
EF	82 (*3)	Rear Part of Cylinder Block
EH	84 (*4)	
EI	86 (*5)	
EV	78 (*1)	Rear Side of Left Bank Cylinder Block
IJ	88 (LHD)	Left Kick Panel
IL	88 (LHD)	Near the Right Side of Steering Column
IN	88 (LHD)	Right Kick Panel
BS	96 (*6)	Back Door Panel Center
	100 (*7)	
BT	96 (*6)	Right Quarter Panel Inner
	100 (*7)	

* 1 : LHD 1GR-FE * 2 : LHD 3RZ-FE * 3 : LHD 1KD-FTV * 4 : LHD 1KZ-TE * 5 : LHD 5L-E * 6 : LHD 5-Door * 7 : LHD 3-Door
* 8 : LHD 8Way Power Seat * 9 : LHD Except 8Way Power Seat * 10 : RHD 1GR-FE * 11 : RHD 3RZ-FE * 12 : RHD 1KD-FTV
* 13 : RHD 1KZ-TE * 14 : RHD 5L-E * 15 : RHD 5-Door * 16 : RHD 3-Door * 17 : RHD 8Way Power Seat
* 18 : RHD Except 8Way Power Seat

Door Lock Control and Theft Deterrent (RHD)

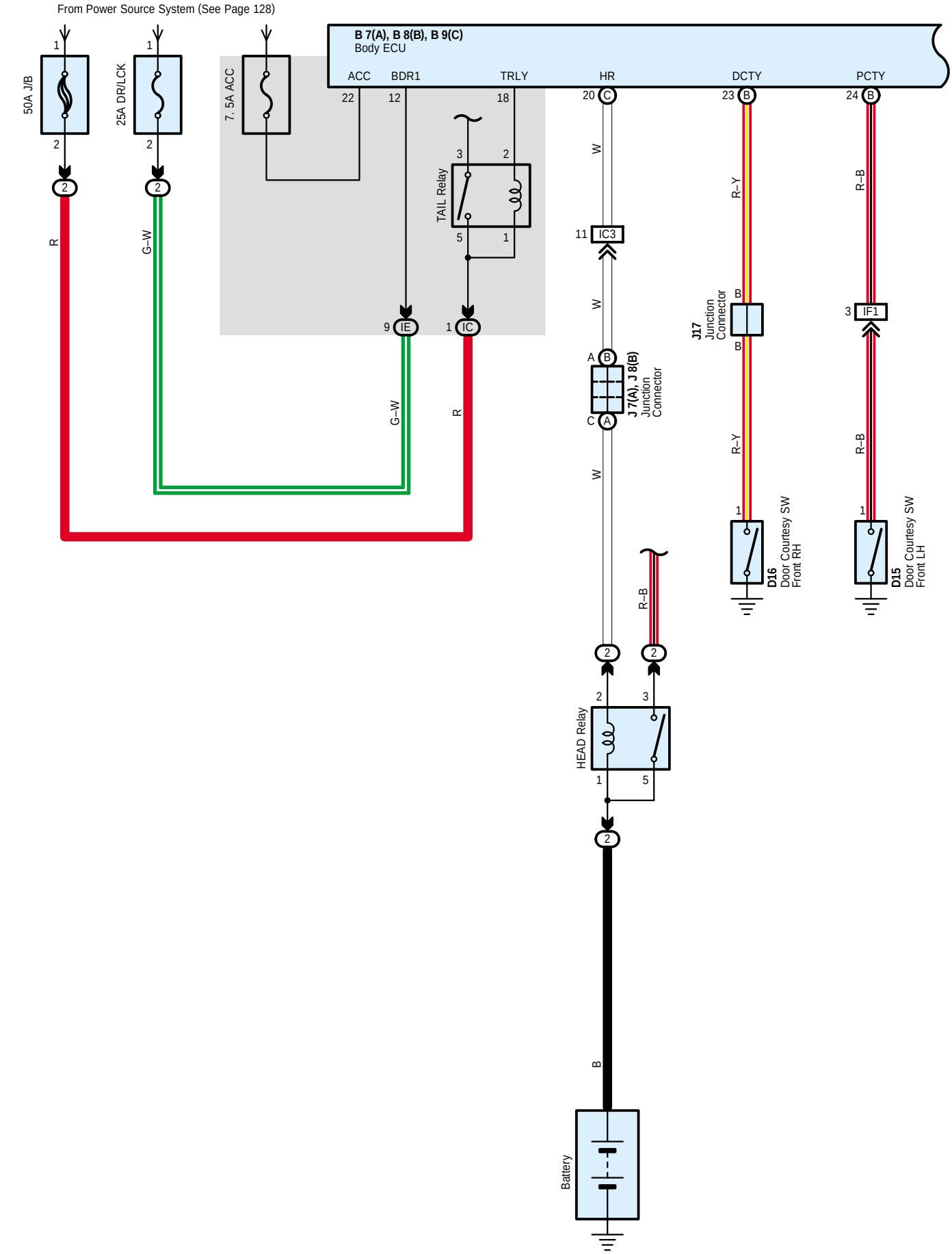

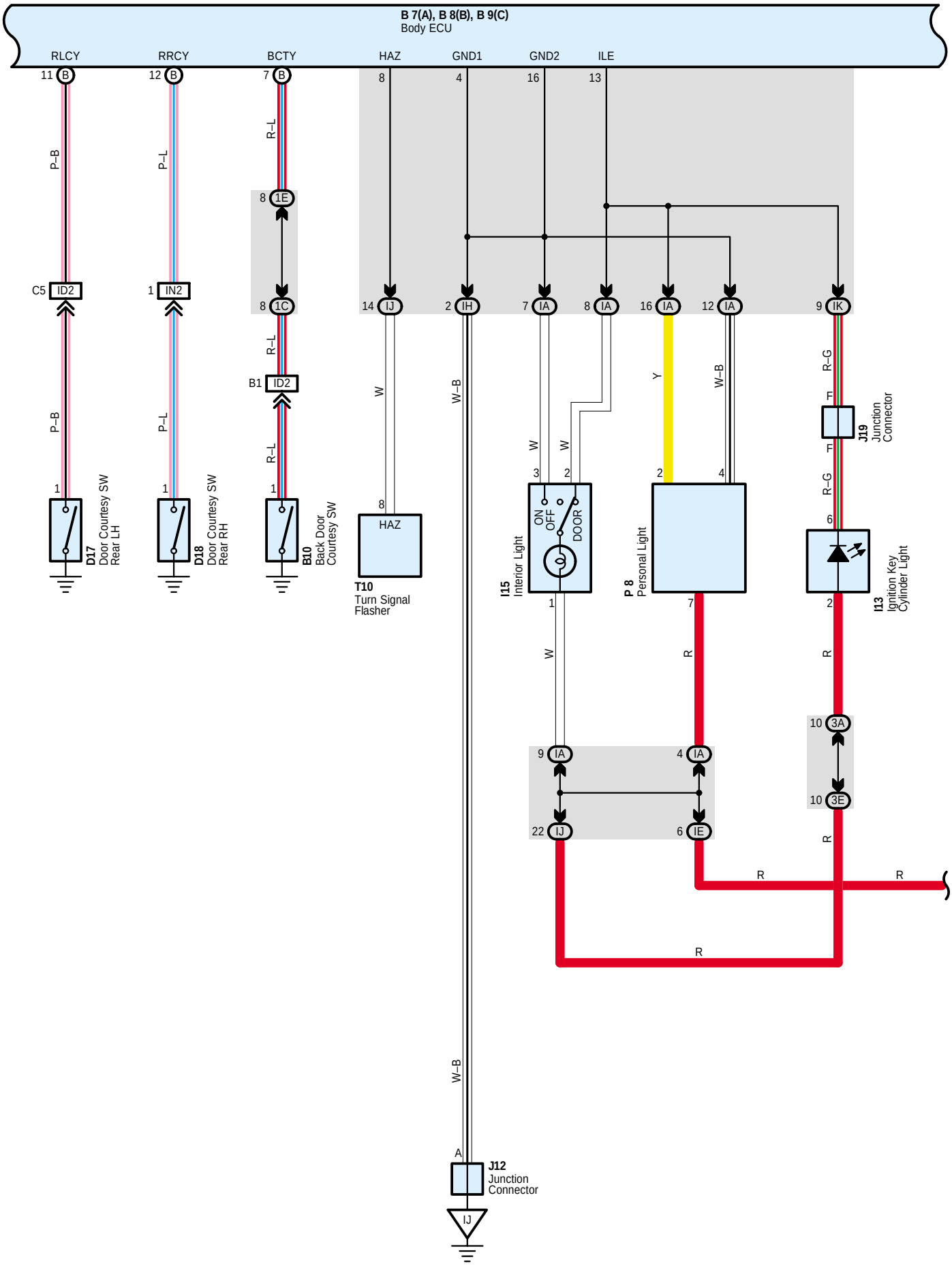
B 7(A), B 8(B), B 9(C)
Body ECU
RLCY
RRCY
BCTY
HAZ
GND1
GND2
ILE
D17
Door Courtesy SW
Rear LH
D18
Door Courtesy SW
Rear RH
B10
Back Door
Courtesy SW
T10
Turn Signal
Flasher
I15
Interior Light
P 8
Personal Light
J19
Junction
Connector
I13
Ignition Key
Cylinder Light
J12
Junction
Connector

Door Lock Control and Theft Deterrent (RHD)

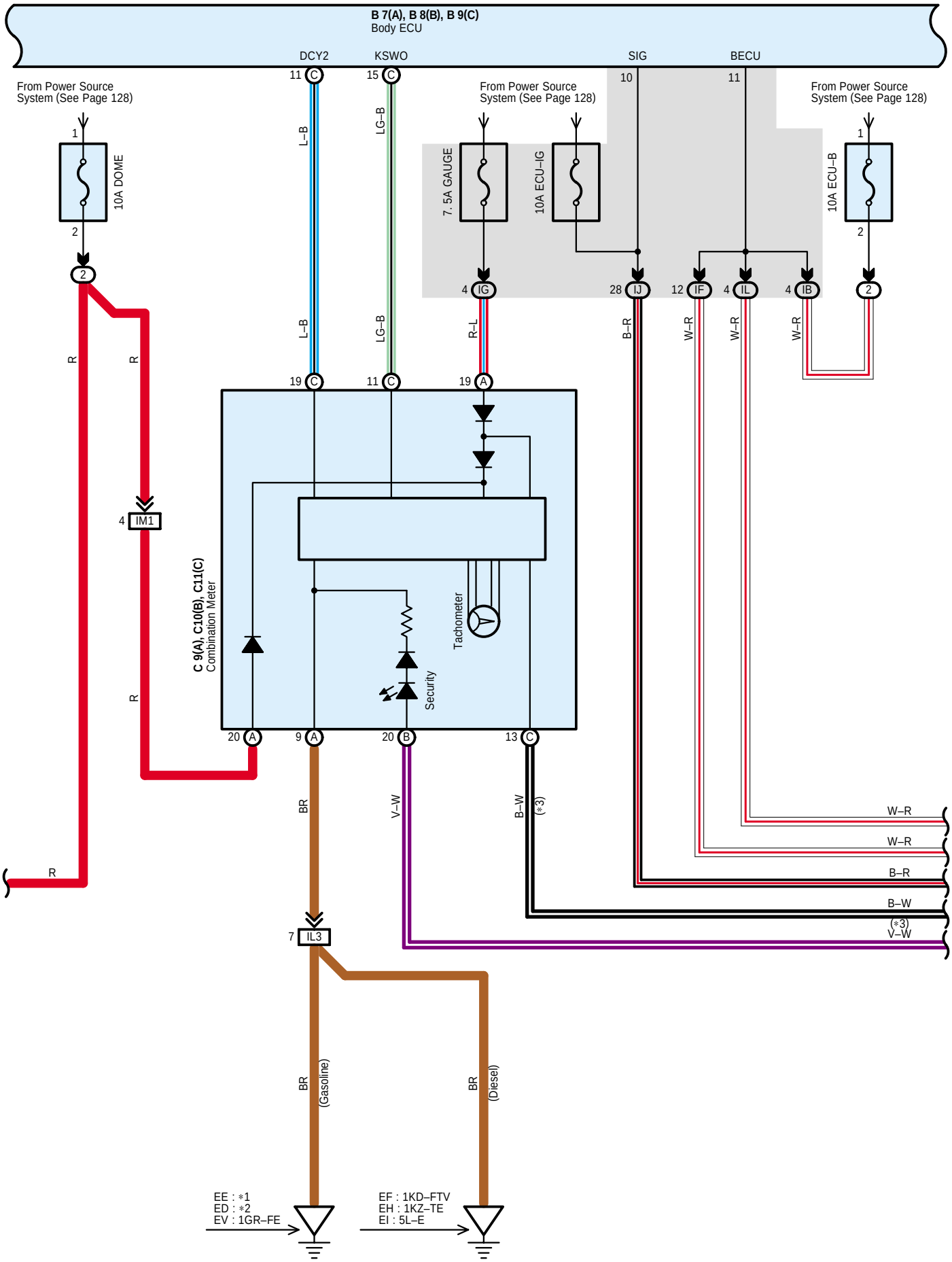

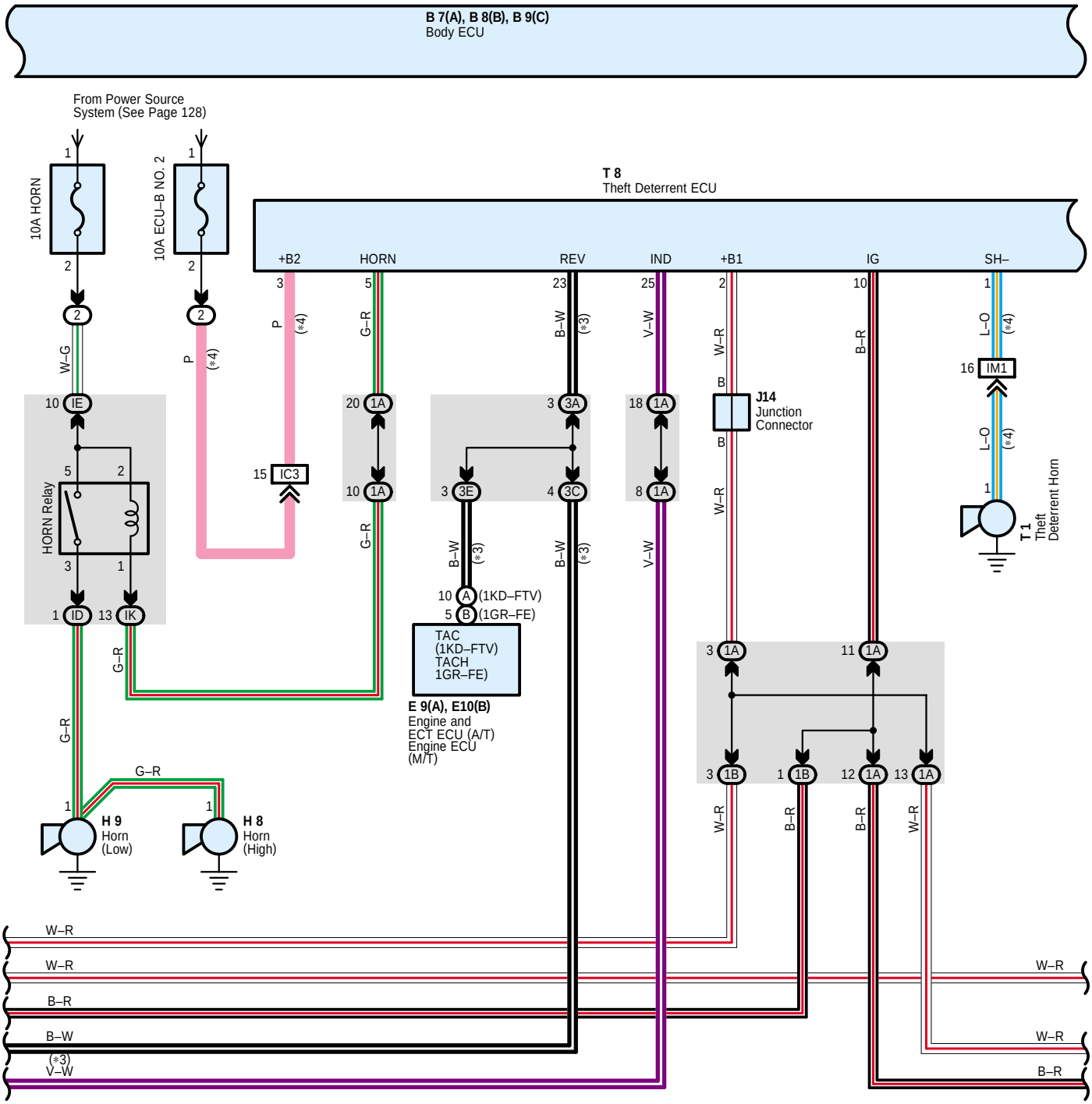

* 1 : 3RZ–FE Unleaded Gasoline
* 2 : 3RZ–FE Leaded Gasoline
* 3 : Europe
* 4 : Except Europe

Door Lock Control and Theft Deterrent (RHD)

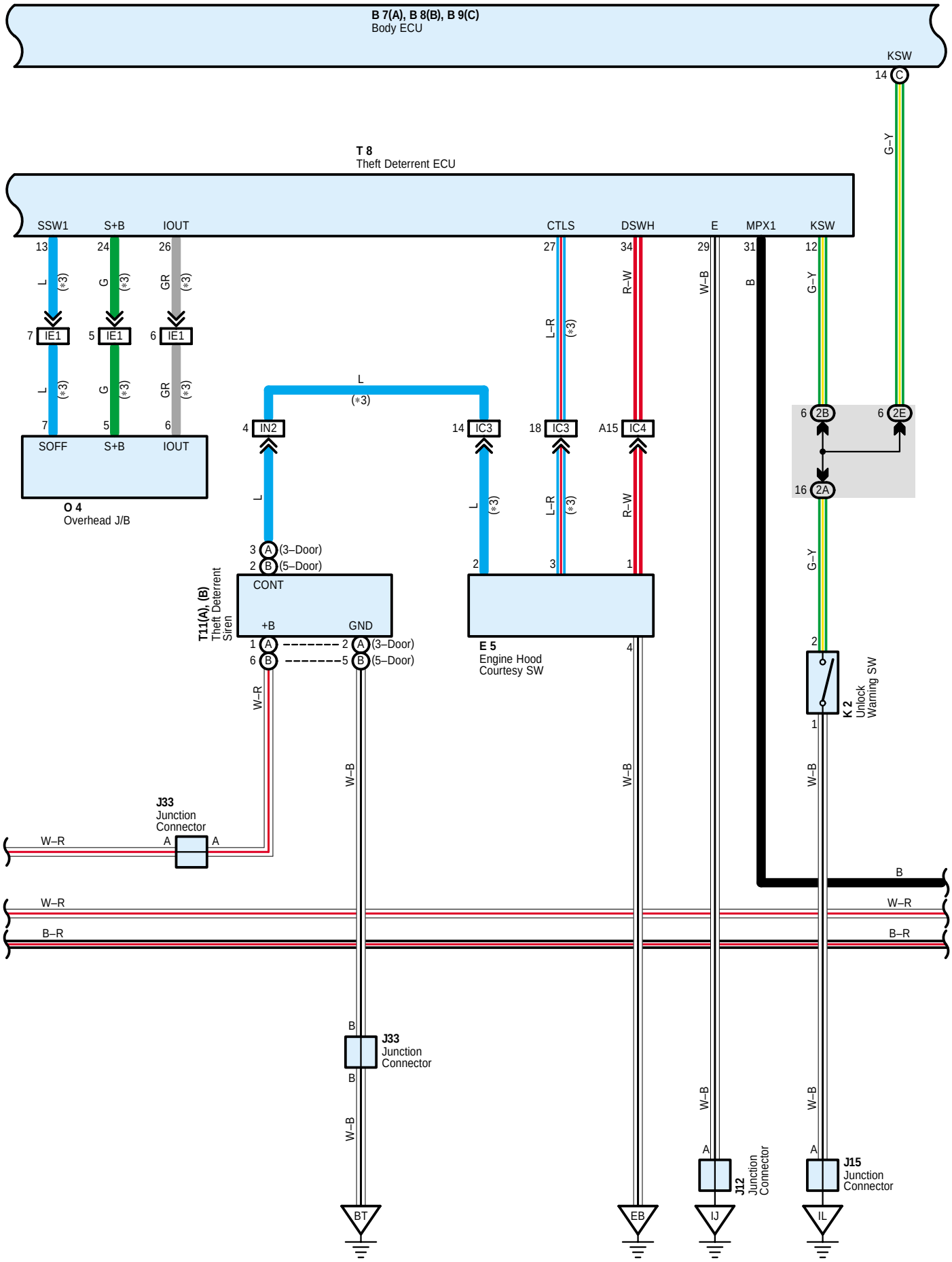

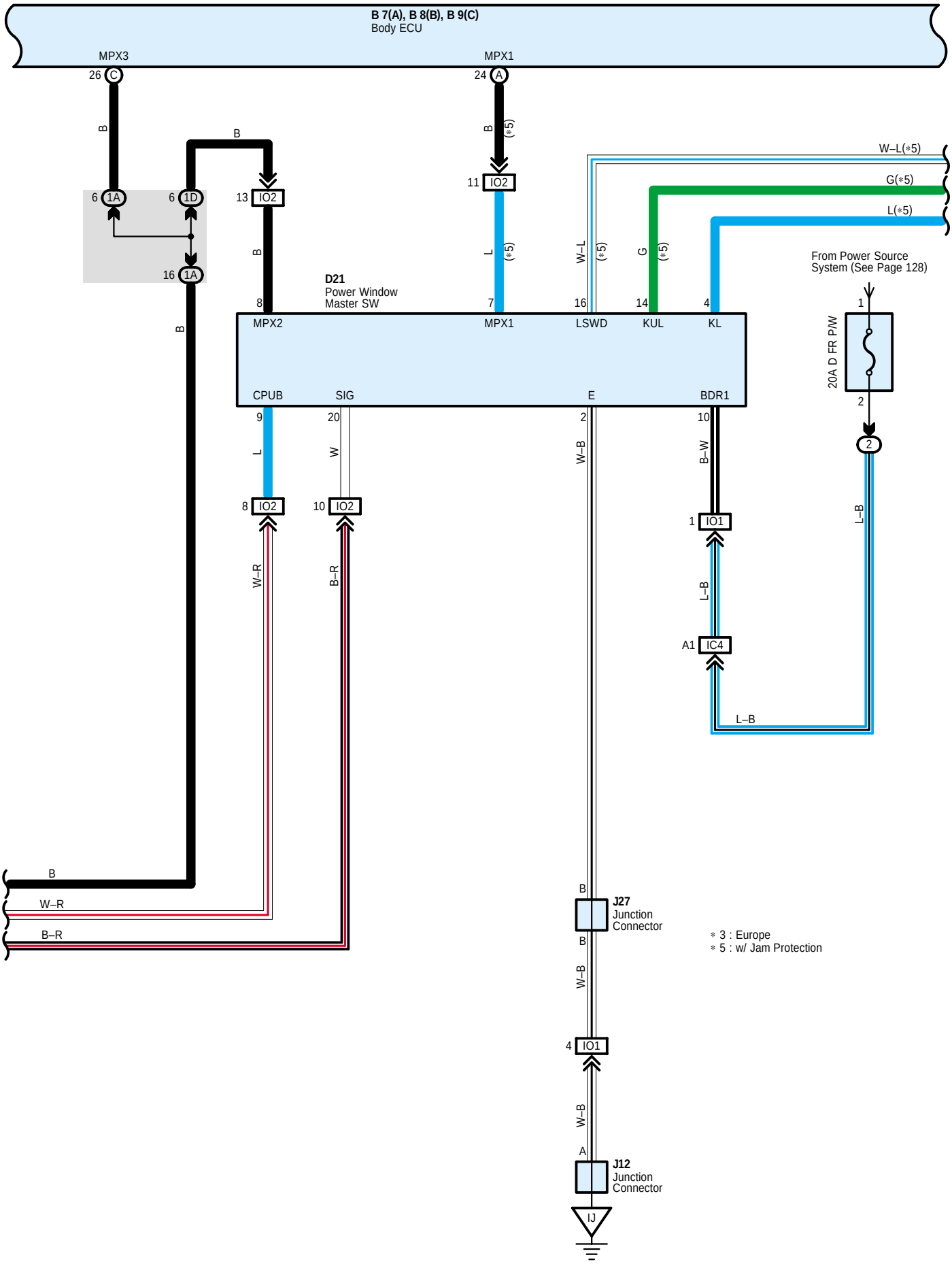
B 7(A), B 8(B), B 9(C)
Body ECU
MPX3
MPX1
26 C
24 A
B
B (*5)
B
6 1A
6 1D
16 1A
13 IO2
11 IO2
B
L (*5)
W–L (*5)
G (*5)
L (*5)
W–L(*5)
G(*5)
L(*5)
From Power Source System (See Page 128)
D21
Power Window Master SW
8 MPX2
7 MPX1
16 LSWD
14 KUL
4 KL
CPUB
SIG
E
BDR1
9
20
2
10
L
W
W–B
B–W
8 IO2
10 IO2
1 IO1
W–R
B–R
L–B
A1 IC4
L–B
L–B
1
2
20A D FR P/W
B
W–R
B–R
B
J27
Junction Connector
B
W–B
4 IO1
W–B
A
J12
Junction Connector
IJ
* 3 : Europe
* 5 : w/ Jam Protection

Door Lock Control and Theft Deterrent (RHD)

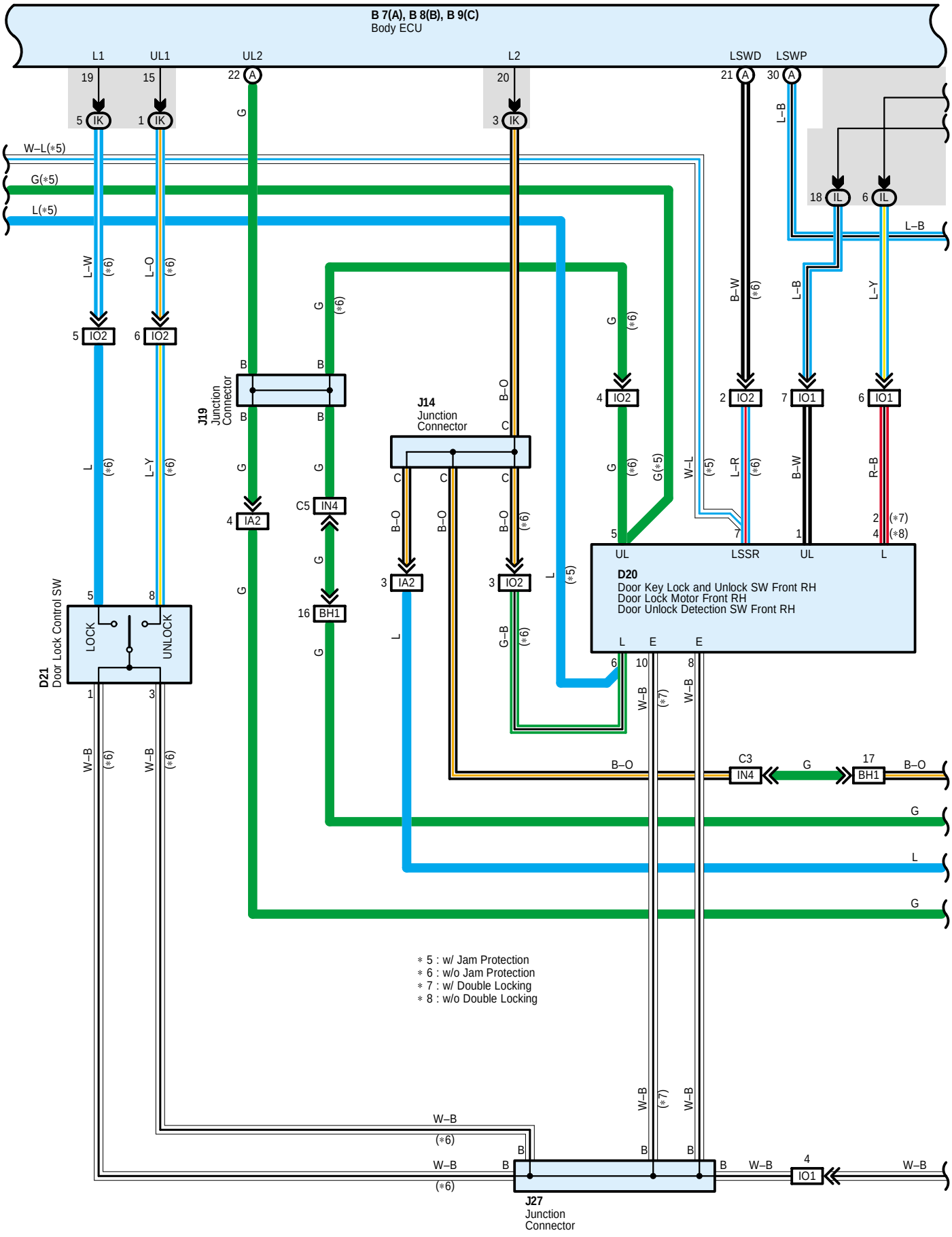

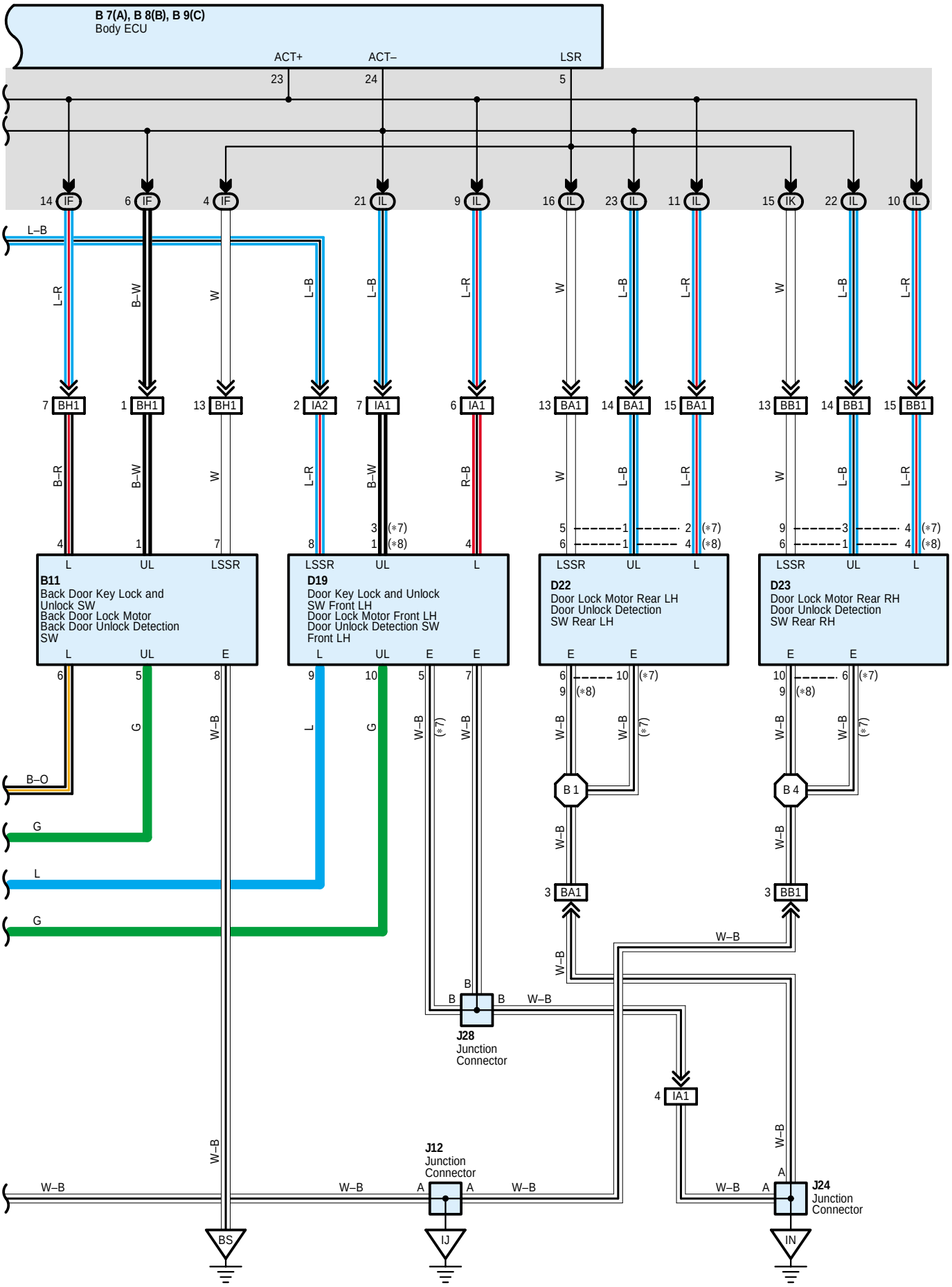
B 7(A), B 8(B), B 9(C)
Body ECU
ACT+
ACT–
LSR
B11
Back Door Key Lock and Unlock SW
Back Door Lock Motor
Back Door Unlock Detection SW
D19
Door Key Lock and Unlock SW Front LH
Door Lock Motor Front LH
Door Unlock Detection SW Front LH
D22
Door Lock Motor Rear LH
Door Unlock Detection SW Rear LH
D23
Door Lock Motor Rear RH
Door Unlock Detection SW Rear RH
J28
Junction Connector
J12
Junction Connector
J24
Junction Connector
BS
IJ
IN

Door Lock Control and Theft Deterrent (RHD)

System Outline

The door lock control is controlled through the various signals input into the body ECU through communication control of the body ECU etc.

1. Manual Unlock Operation

When the door lock control SW of the driver's side door is pushed to UNLOCK, the door lock will unlock.

2. Manual Lock Operation

When the door lock control SW of the driver's side door is pushed to LOCK, the door lock will lock.

3. Door Key Unlock Operation

When the driver's or front passenger's side door or back door is unlocked using the ignition key, all the other doors are unlocked, too.

4. Ignition Key Reminder Operation

When the door lock operation is made using the door knob with the ignition key remained inserted in the key cylinder and the door open, unlock operation is automatically made. Additionally, if lock operation is made with the door lock control SW or door key lock and unlock SW, unlock operation is automatically made after the lock operation has been completed.

Service Hints

Body ECU

11, 12–Ground : Always approx. 12 volts
10–Ground : Approx. 12 volts with ignition SW at ON position
22–Ground : Approx. 12 volts with ignition SW at ACC or ON position
4, 16–Ground : Always continuity

○ : **Parts Location**

Code		See Page	Code		See Page	Code		See Page
B7	A	68 (RHD)	E5		58 (*10)	J15		70 (RHD)
B8	B	68 (RHD)			60 (*11)	J17		70 (RHD)
B9	C	68 (RHD)			62 (*12)	J19		70 (RHD)
B10		72 (*15)			64 (*13)	J24		70 (RHD)
		74 (*16)			66 (*14)	J27		72 (*15)
B11		72 (*15)	E9	A	69 (RHD)			74 (*16)
		74 (*16)	E10	B	69 (RHD)	J28		72 (*15)
C9	A	69 (RHD)	H8		59 (*10)			74 (*16)
C10	B	69 (RHD)			61 (*11)	J33		72 (*15)
C11	C	69 (RHD)			63 (*12)			74 (*16)
D15		72 (*15)			65 (*13)	K2		70 (RHD)
		74 (*16)			67 (*14)	O4		73 (*15)
D16		72 (*15)	H9		59 (*10)			75 (*16)
		74 (*16)			61 (*11)	P8		73 (*15)
D17		72 (*15)			63 (*12)			75 (*16)
D18		72 (*15)			65 (*13)	T1		59 (*10)
D19		72 (*15)			67 (*14)			61 (*11)
		74 (*16)	I13		70 (RHD)			63 (*12)
D20		72 (*15)	I15		72 (*15)			65 (*13)
		74 (*16)			74 (*16)			67 (*14)
D21		72 (*15)	J7	A	70 (RHD)	T8		71 (RHD)
		74 (*16)	J8	B	70 (RHD)	T10		71 (RHD)
D22		72 (*15)	J12		70 (RHD)	T11	A	75 (*16)
D23		72 (*15)	J14		70 (RHD)		B	73 (*15)

* 1 : LHD 1GR–FE * 2 : LHD 3RZ–FE * 3 : LHD 1KD–FTV * 4 : LHD 1KZ–TE * 5 : LHD 5L–E * 6 : LHD 5–Door * 7 : LHD 3–Door
* 8 : LHD 8Way Power Seat * 9 : LHD Except 8Way Power Seat * 10 : RHD 1GR–FE * 11 : RHD 3RZ–FE * 12 : RHD 1KD–FTV
* 13 : RHD 1KZ–TE * 14 : RHD 5L–E * 15 : RHD 5–Door * 16 : RHD 3–Door * 17 : RHD 8Way Power Seat
* 18 : RHD Except 8Way Power Seat

: **Relay Blocks**

Code	See Page	Relay Blocks (Relay Block Location)
2	23	Engine Room R/B (Engine Compartment Left)

: **Junction Block and Wire Harness Connector**

Code	See Page	Junction Block and Wire Harness (Connector Location)
IA	28 (RHD)	Roof Wire and Driver Side J/B (Lower Finish Panel)
IB	28 (RHD)	Engine Room Main Wire and Driver Side J/B (Lower Finish Panel)
IC		
ID		
IE		
IF	28 (RHD)	Floor Wire and Driver Side J/B (Lower Finish Panel)
IG	29 (RHD)	Instrument Panel Wire and Driver Side J/B (Lower Finish Panel)
IH		
IJ		
IK		
IL		
1A	32 (RHD)	Instrument Panel Wire and J/B No.1 (Instrument Panel Reinforcement Right)
1B		
1C		
1D		
1E		
2A	34	Instrument Panel Wire and J/B No.2 (Instrument Panel Reinforcement Center)
2B		
2E		
3A	36 (RHD)	Instrument Panel Wire and J/B No.3 (Instrument Panel Reinforcement Left)
3C		
3E		

: **Connector Joining Wire Harness and Wire Harness**

Code	See Page	Joining Wire Harness and Wire Harness (Connector Location)
IA1	112 (RHD)	Front Door LH Wire and Instrument Panel Wire (Left Kick Panel)
IA2		
IC3	112 (RHD)	Instrument Panel Wire and Engine Room Main Wire (Left Kick Panel)
IC4		
ID2	114 (RHD)	Instrument Panel Wire and Floor No.2 Wire (Left Kick Panel)
IE1	114 (RHD)	Roof Wire and Instrument Panel Wire (Left Side of the Driver Side J/B)
IF1	114 (RHD)	Instrument Panel Wire and Instrument Panel Wire (Near the J/B No.1)
IL3	116 (RHD)	Engine Wire and Instrument Panel Wire (Left Side of the Blower Unit)
IM1	116 (RHD)	Instrument Panel Wire and Engine Room Main Wire (Right Kick Panel)
IN2	118 (RHD)	Instrument Panel Wire and Floor Wire (Right Kick Panel)
IN4		
IO1	118 (RHD)	Front Door RH Wire and Instrument Panel Wire (Right Kick Panel)
IO2		
BA1	120 (*15)	Rear Door LH Wire and Instrument Panel Wire (Center Pillar LH)
BB1	120 (*15)	Rear Door RH Wire and Instrument Panel Wire (Center Pillar RH)
BH1	122 (*15)	Back Door No.1 Wire and Floor Wire (Right Quarter Panel Inner)
	124 (*16)	

* 1 : LHD 1GR-FE * 2 : LHD 3RZ-FE * 3 : LHD 1KD-FTV * 4 : LHD 1KZ-TE * 5 : LHD 5L-E * 6 : LHD 5-Door * 7 : LHD 3-Door
* 8 : LHD 8Way Power Seat * 9 : LHD Except 8Way Power Seat * 10 : RHD 1GR-FE * 11 : RHD 3RZ-FE * 12 : RHD 1KD-FTV
* 13 : RHD 1KZ-TE * 14 : RHD 5L-E * 15 : RHD 5-Door * 16 : RHD 3-Door * 17 : RHD 8Way Power Seat
* 18 : RHD Except 8Way Power Seat

▽ : **Ground Points**

Code	See Page	Ground Points Location
EB	102 (*10)	Front Left Fender
	104 (*11)	
	106 (*12)	
	108 (*13)	
	110 (*14)	
ED	104 (*11)	Ignition Coil Bracket
EE	104 (*11)	Intake Manifold
EF	106 (*12)	Rear Part of Cylinder Block
EH	108 (*13)	
EI	110 (*14)	
EV	102 (*10)	Rear Side of Left Bank Cylinder Block
IJ	112 (RHD)	Right Kick Panel
IL	112 (RHD)	Instrument Panel Brace RH
IN	112 (RHD)	Left Kick Panel
BS	120 (*15)	Back Door Panel Center
	124 (*16)	
BT	120 (*15)	Right Quarter Panel Inner
	124 (*16)	

◯ : **Splice Points**

Code	See Page	Wire Harness with Splice Points	Code	See Page	Wire Harness with Splice Points
B1	122 (*15)	Rear Door No.1 Wire LH	B4	122 (*15)	Rear Door No.1 Wire RH

* 1 : LHD 1GR-FE * 2 : LHD 3RZ-FE * 3 : LHD 1KD-FTV * 4 : LHD 1KZ-TE * 5 : LHD 5L-E * 6 : LHD 5-Door * 7 : LHD 3-Door
* 8 : LHD 8Way Power Seat * 9 : LHD Except 8Way Power Seat * 10 : RHD 1GR-FE * 11 : RHD 3RZ-FE * 12 : RHD 1KD-FTV
* 13 : RHD 1KZ-TE * 14 : RHD 5L-E * 15 : RHD 5-Door * 16 : RHD 3-Door * 17 : RHD 8Way Power Seat
* 18 : RHD Except 8Way Power Seat

Double Locking

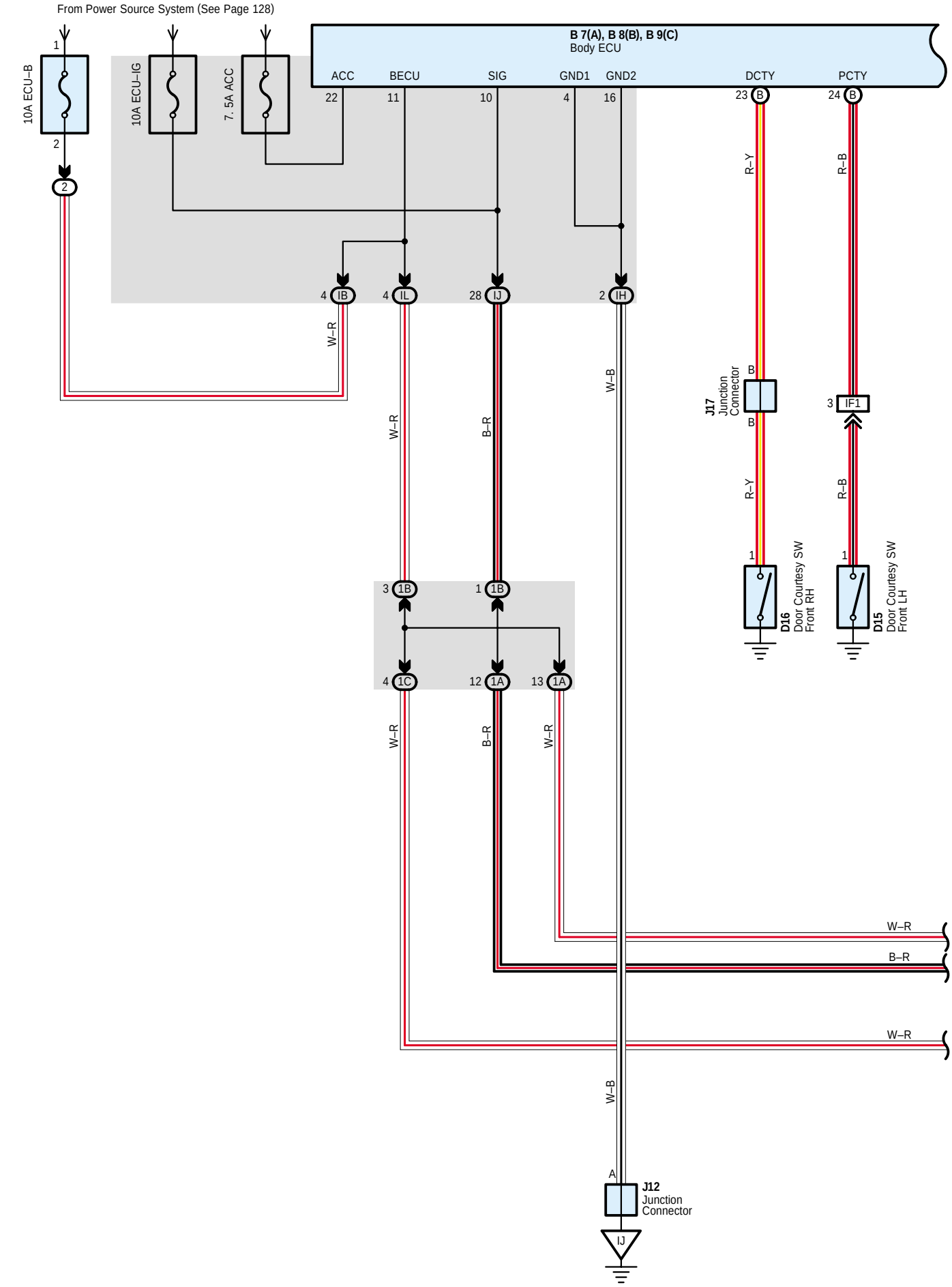

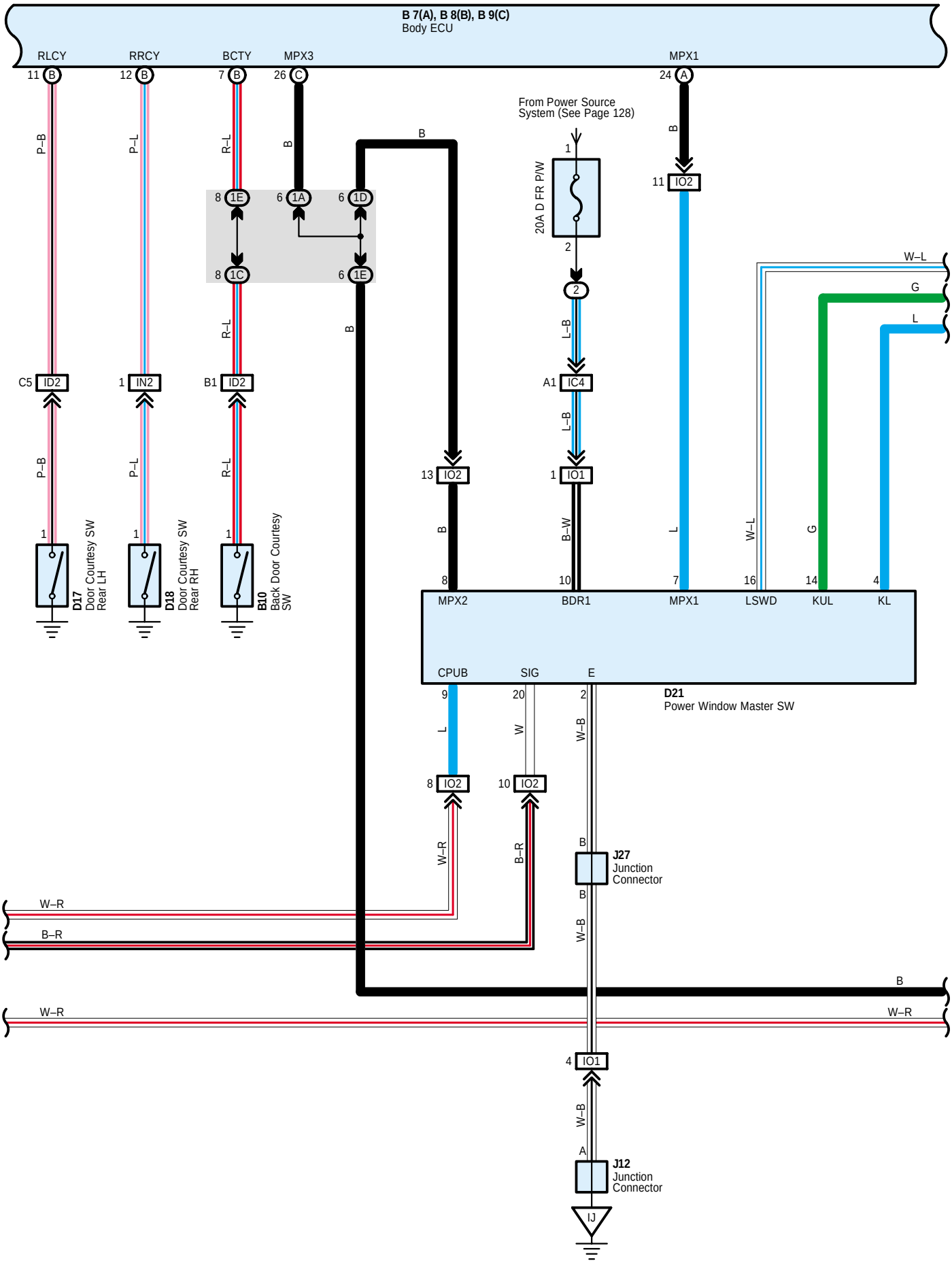
B 7(A), B 8(B), B 9(C)
Body ECU
RLCY
RRCY
BCTY
MPX3
MPX1
From Power Source System (See Page 128)
20A D FR P/W
D17 Door Courtesy SW Rear LH
D18 Door Courtesy SW Rear RH
B10 Back Door Courtesy SW
MPX2
BDR1
MPX1
LSWD
KUL
KL
CPUB
SIG
E
D21 Power Window Master SW
J27 Junction Connector
J12 Junction Connector
IJ

Double Locking

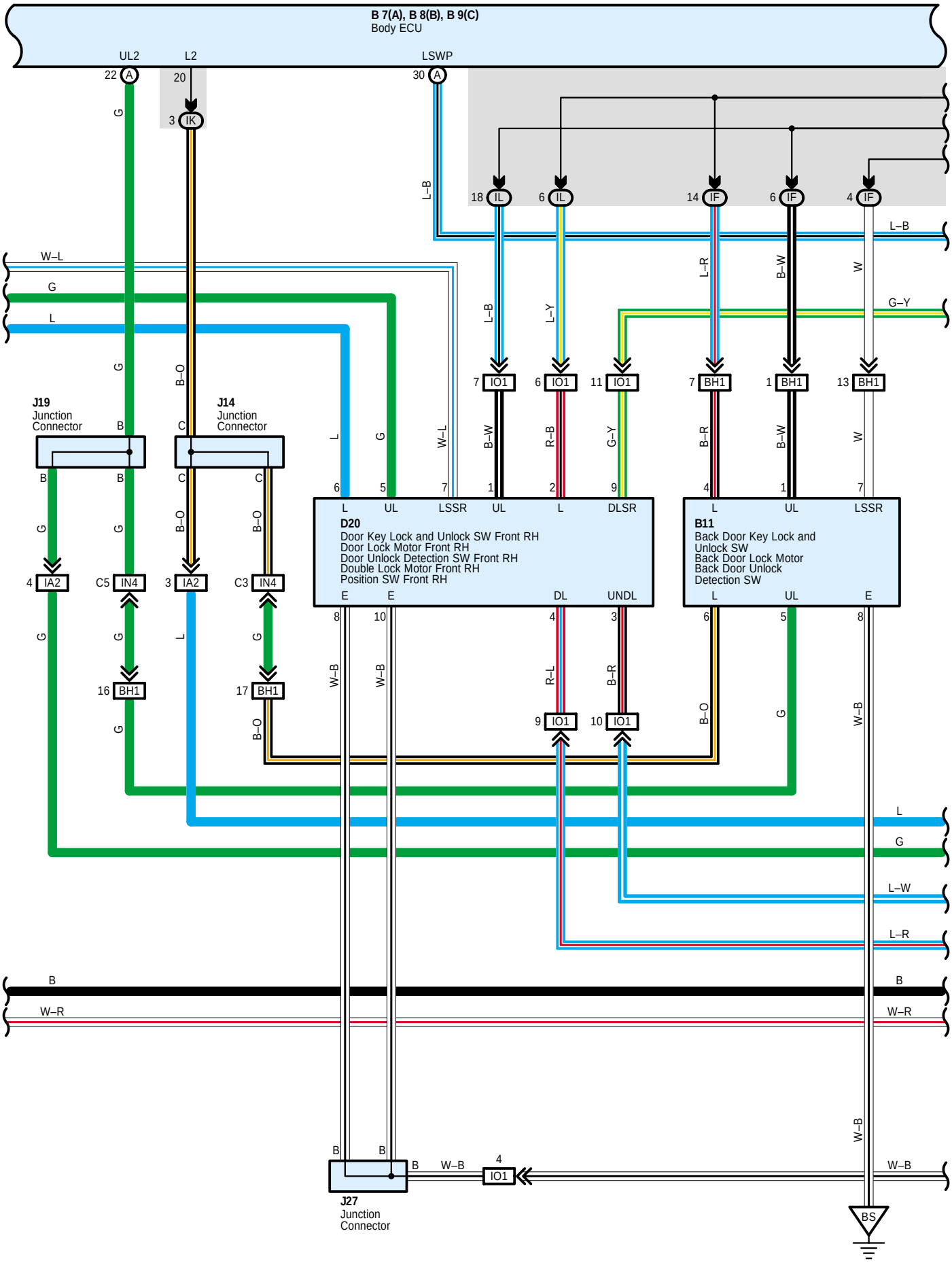

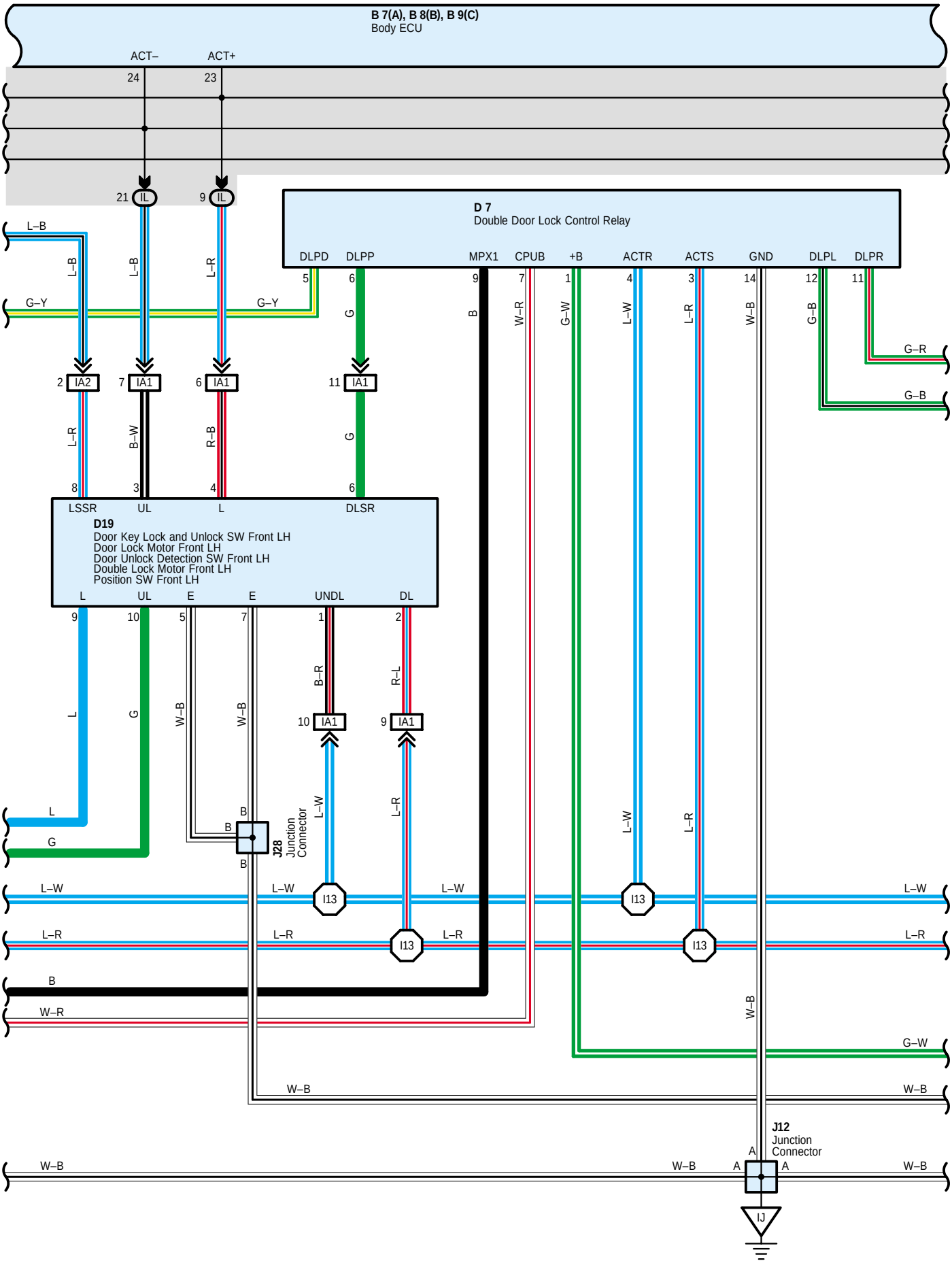
B 7(A), B 8(B), B 9(C)
Body ECU
ACT–
ACT+
24
23
21 IL
9 IL
D 7
Double Door Lock Control Relay
DLPD
DLPP
MPX1
CPUB
+B
ACTR
ACTS
GND
DLPL
DLPR
L–B
G–Y
G–R
G–B
2 IA2
7 IA1
6 IA1
11 IA1
LSSR
UL
L
DLSR
D19
Door Key Lock and Unlock SW Front LH
Door Lock Motor Front LH
Door Unlock Detection SW Front LH
Double Lock Motor Front LH
Position SW Front LH
UNDL
DL
10 IA1
9 IA1
J28
Junction
Connector
I13
L–W
L–R
B
W–R
G–W
W–B
J12
Junction
Connector
IJ

Double Locking

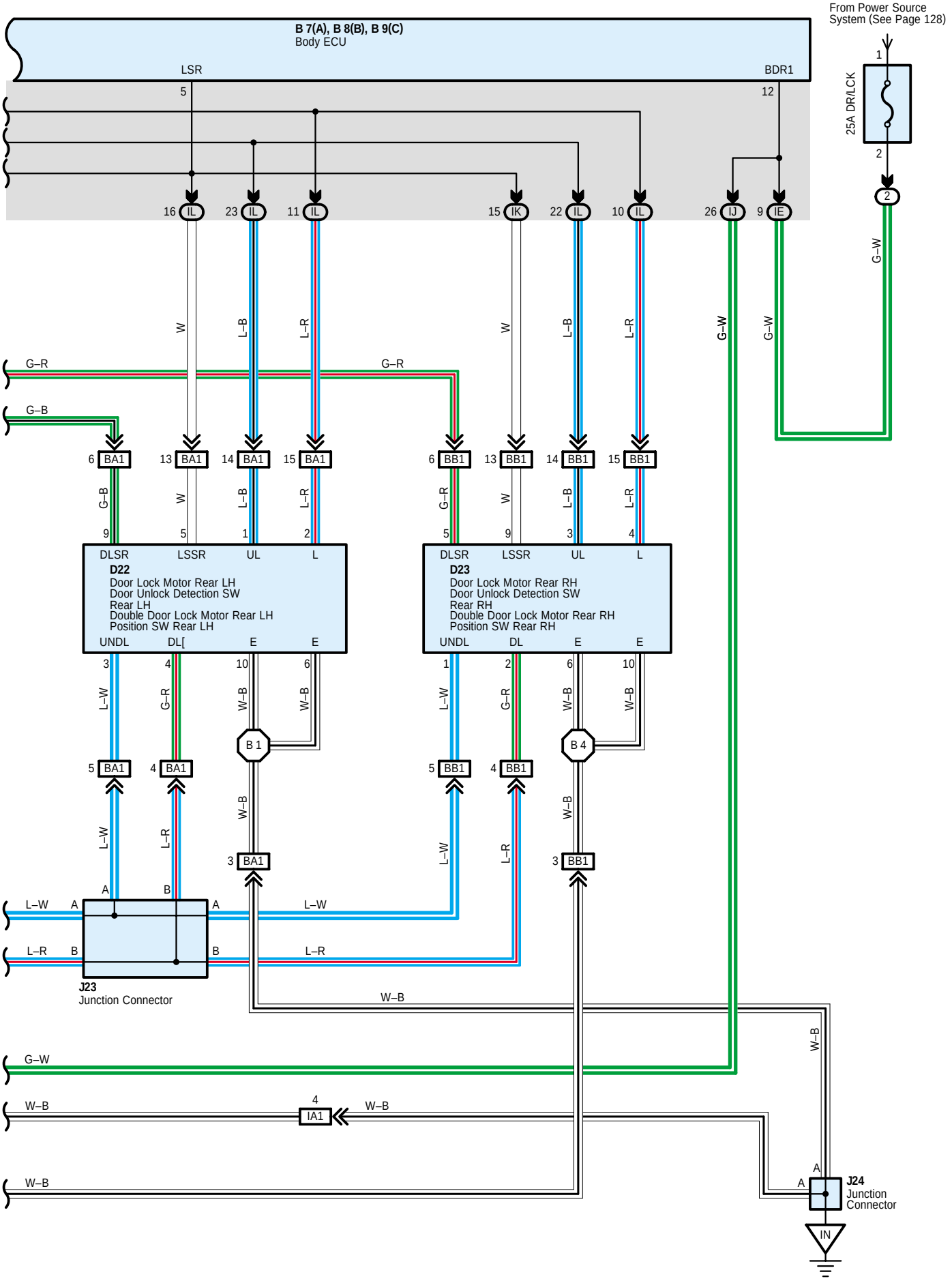

Service Hints

Body ECU

22–Ground : Approx. 12 volts with ignition SW at ACC or ON position
11, 12–Ground : Always approx. 12 volts
10–Ground : Approx. 12 volts with ignition SW at ON position
4, 16–Ground : Always continuity

D7 Double Door Lock Control Relay

1, 7–Ground : Always approx. 12 volts
14–Ground : Always continuity

: Parts Location

Code		See Page	Code	See Page	Code	See Page
B7	A	68 (RHD)	D16	74 (*16)	J12	70 (RHD)
B8	B	68 (RHD)	D17	72 (*15)	J14	70 (RHD)
B9	C	68 (RHD)	D18	72 (*15)	J17	70 (RHD)
B10		72 (*15)	D19	72 (*15)	J19	70 (RHD)
		74 (*16)		74 (*16)	J23	70 (RHD)
B11		72 (*15)	D20	72 (*15)	J24	70 (RHD)
		74 (*16)		74 (*16)	J27	72 (*15)
D7		69 (RHD)	D21	72 (*15)		74 (*16)
D15		72 (*15)		74 (*16)	J28	72 (*15)
		74 (*16)	D22	72 (*15)		74 (*16)
D16		72 (*15)	D23	72 (*15)		

: Relay Blocks

Code	See Page	Relay Blocks (Relay Block Location)
2	23	Engine Room R/B (Engine Compartment Left)

: Junction Block and Wire Harness Connector

Code	See Page	Junction Block and Wire Harness (Connector Location)
IB	28 (RHD)	Engine Room Main Wire and Driver Side J/B (Lower Finish Panel)
IE		
IF	28 (RHD)	Floor Wire and Driver Side J/B (Lower Finish Panel)
IH	29 (RHD)	Instrument Panel Wire and Driver Side J/B (Lower Finish Panel)
IJ		
IK		
IL		
1A	32 (RHD)	Instrument Panel Wire and J/B No.1 (Instrument Panel Reinforcement Right)
1B		
1C		
1D		
1E		

* 1 : LHD 1GR–FE * 2 : LHD 3RZ–FE * 3 : LHD 1KD–FTV * 4 : LHD 1KZ–TE * 5 : LHD 5L–E * 6 : LHD 5–Door * 7 : LHD 3–Door
* 8 : LHD 8Way Power Seat * 9 : LHD Except 8Way Power Seat * 10 : RHD 1GR–FE * 11 : RHD 3RZ–FE * 12 : RHD 1KD–FTV
* 13 : RHD 1KZ–TE * 14 : RHD 5L–E * 15 : RHD 5–Door * 16 : RHD 3–Door * 17 : RHD 8Way Power Seat
* 18 : RHD Except 8Way Power Seat

: **Connector Joining Wire Harness and Wire Harness**

Code	See Page	Joining Wire Harness and Wire Harness (Connector Location)
IA1	112 (RHD)	Front Door LH Wire and Instrument Panel Wire (Left Kick Panel)
IA2		
IC4	112 (RHD)	Instrument Panel Wire and Engine Room Main Wire (Left Kick Panel)
ID2	114 (RHD)	Instrument Panel Wire and Floor No.2 Wire (Left Kick Panel)
IF1	114 (RHD)	Instrument Panel Wire and Instrument Panel Wire (Near the J/B No.1)
IN2	118 (RHD)	Instrument Panel Wire and Floor Wire (Right Kick Panel)
IN4		
IO1	118 (RHD)	Front Door RH Wire and Instrument Panel Wire (Right Kick Panel)
IO2		
BA1	120 (*15)	Rear Door LH Wire and Instrument Panel Wire (Center Pillar LH)
BB1	120 (*15)	Rear Door RH Wire and Instrument Panel Wire (Center Pillar RH)
BH1	122 (*15)	Back Door No.1 Wire and Floor Wire (Right Quarter Panel Inner)
	124 (*16)	

: **Ground Points**

Code	See Page	Ground Points Location
IJ	112 (RHD)	Right Kick Panel
IN	112 (RHD)	Left Kick Panel
BS	120 (*15)	Back Door Panel Center
	124 (*16)	

: **Splice Points**

Code	See Page	Wire Harness with Splice Points	Code	See Page	Wire Harness with Splice Points
I13	114 (RHD)	Instrument Panel Wire	B4	122 (*15)	Rear Door No.1 Wire RH
B1	122 (*15)	Rear Door No.1 Wire LH			

* 1 : LHD 1GR-FE * 2 : LHD 3RZ-FE * 3 : LHD 1KD-FTV * 4 : LHD 1KZ-TE * 5 : LHD 5L-E * 6 : LHD 5-Door * 7 : LHD 3-Door
* 8 : LHD 8Way Power Seat * 9 : LHD Except 8Way Power Seat * 10 : RHD 1GR-FE * 11 : RHD 3RZ-FE * 12 : RHD 1KD-FTV
* 13 : RHD 1KZ-TE * 14 : RHD 5L-E * 15 : RHD 5-Door * 16 : RHD 3-Door * 17 : RHD 8Way Power Seat
* 18 : RHD Except 8Way Power Seat

ECT and A/T Indicator (1GR-FE)

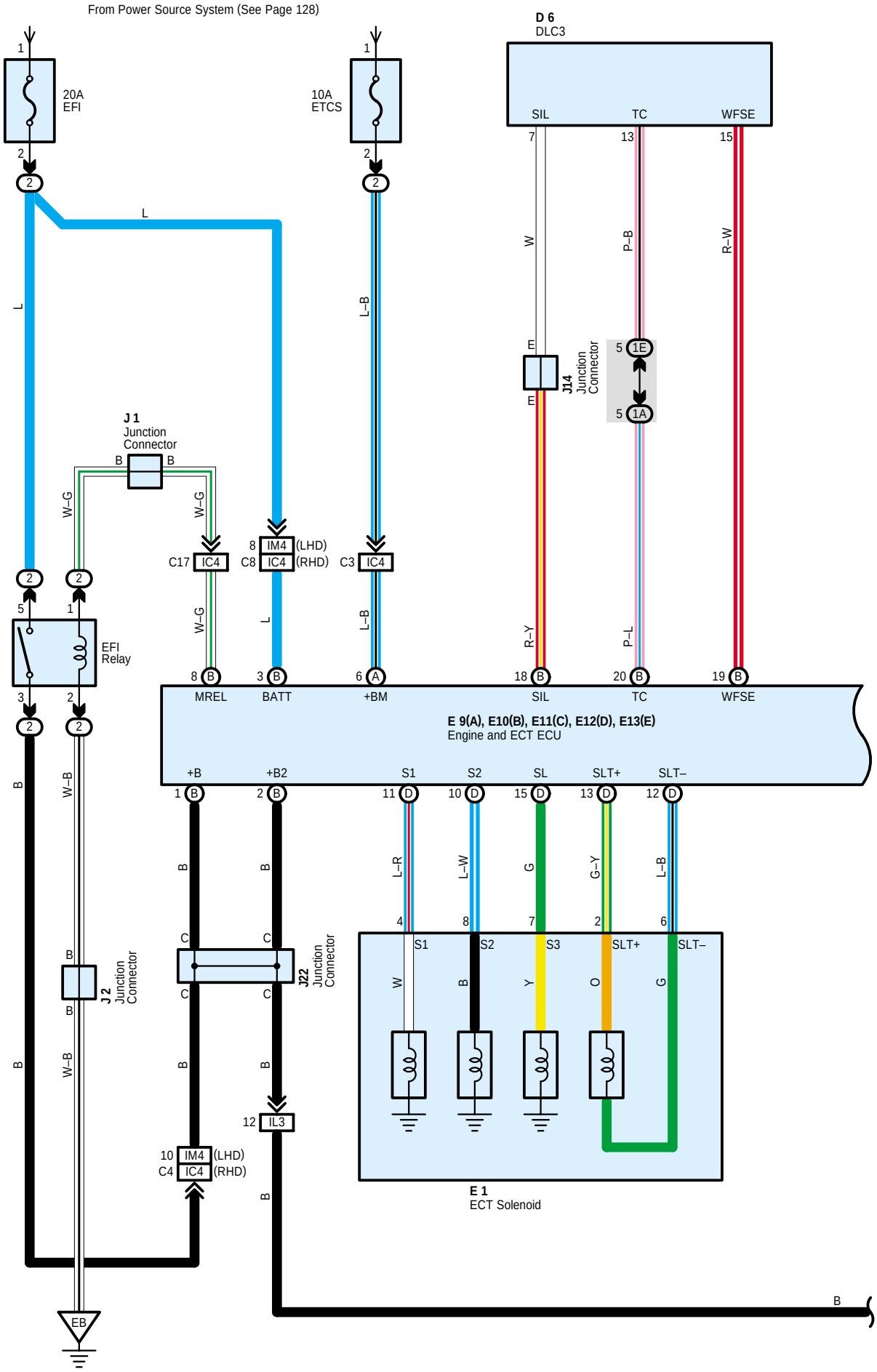

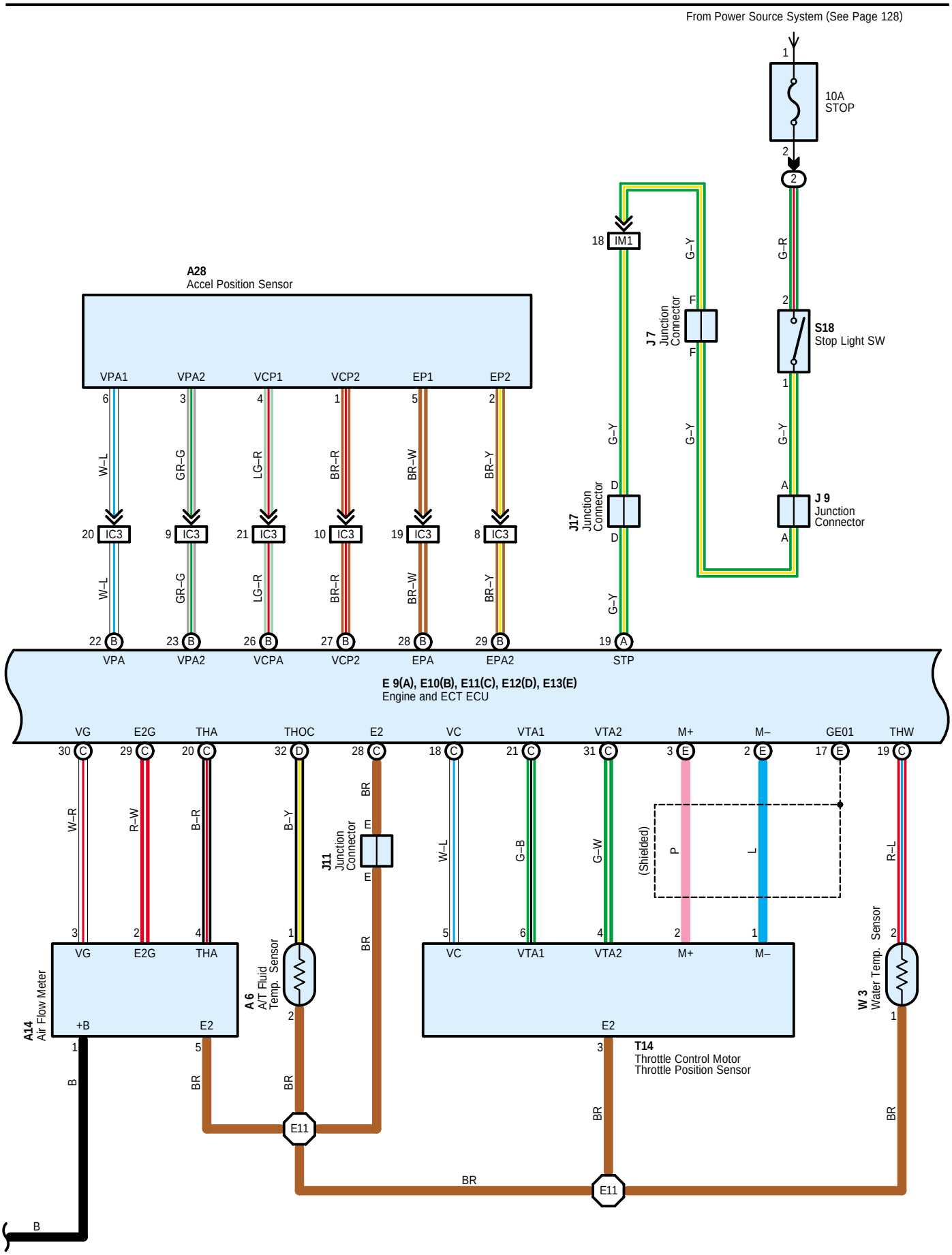
From Power Source System (See Page 128)
10A
STOP
S18
Stop Light SW
J 7
Junction
Connector
J 9
Junction
Connector
J17
Junction
Connector
A28
Accel Position Sensor
VPA1
VPA2
VCP1
VCP2
EP1
EP2
IC3
IM1
VPA
VPA2
VCPA
VCP2
EPA
EPA2
STP
E 9(A), E10(B), E11(C), E12(D), E13(E)
Engine and ECT ECU
VG
E2G
THA
THOC
E2
VC
VTA1
VTA2
M+
M–
GE01
THW
J11
Junction
Connector
(Shielded)
A14
Air Flow Meter
+B
A 6
A/T Fluid
Temp. Sensor
T14
Throttle Control Motor
Throttle Position Sensor
W 3
Water Temp. Sensor
E11

ECT and A/T Indicator (1GR–FE)

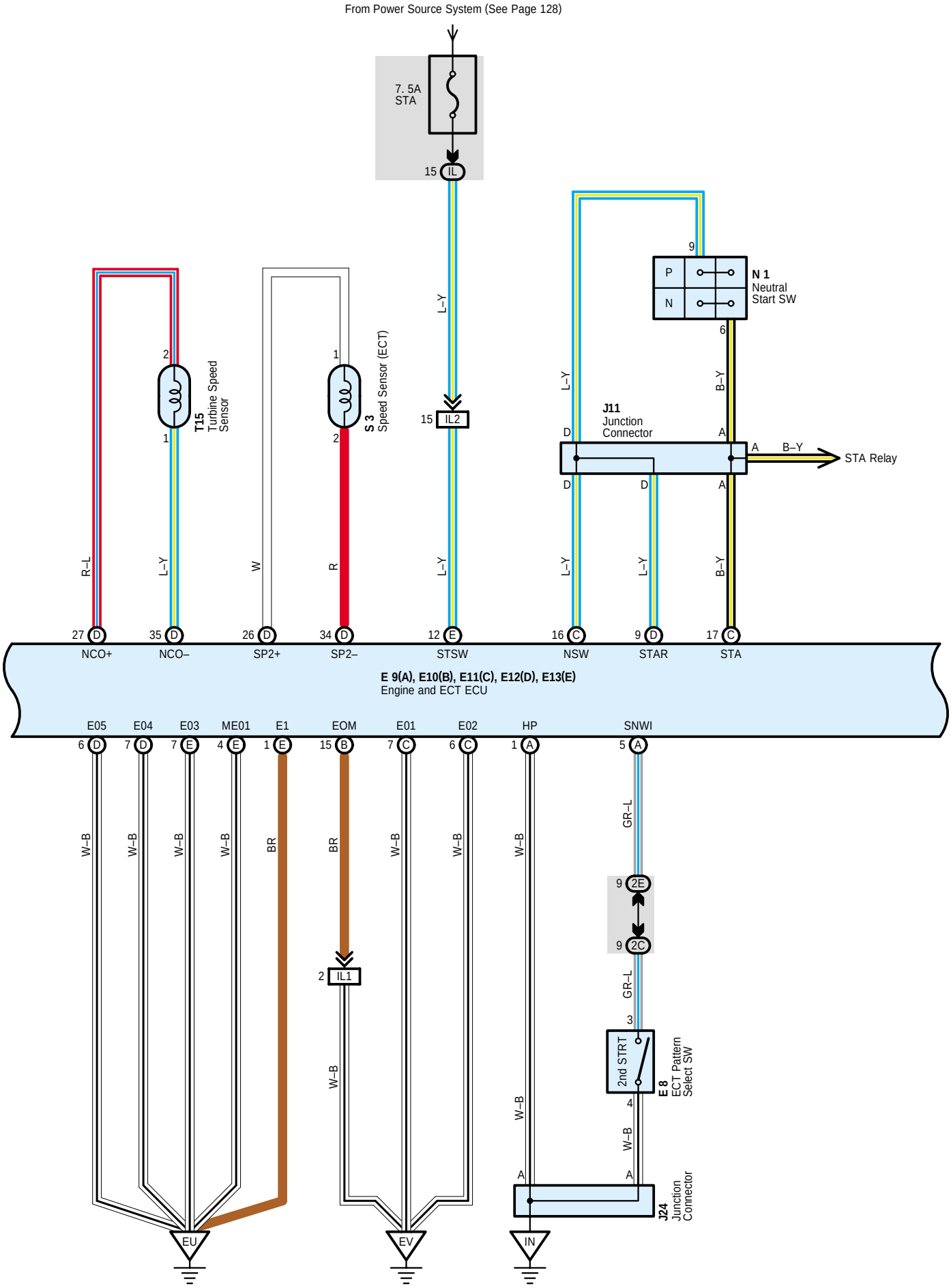

From Power Source System (See Page 128)

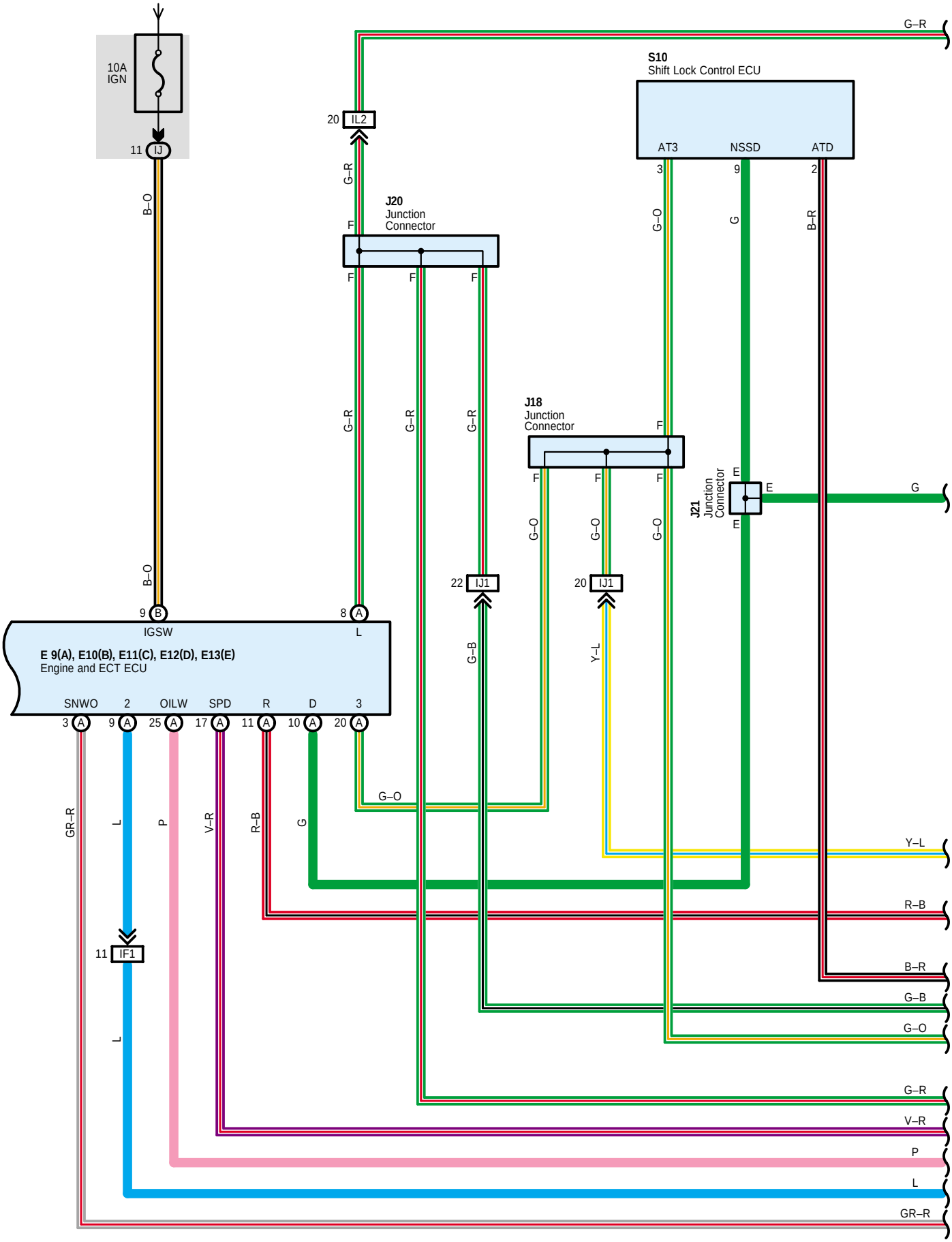

ECT and A/T Indicator (1GR–FE)

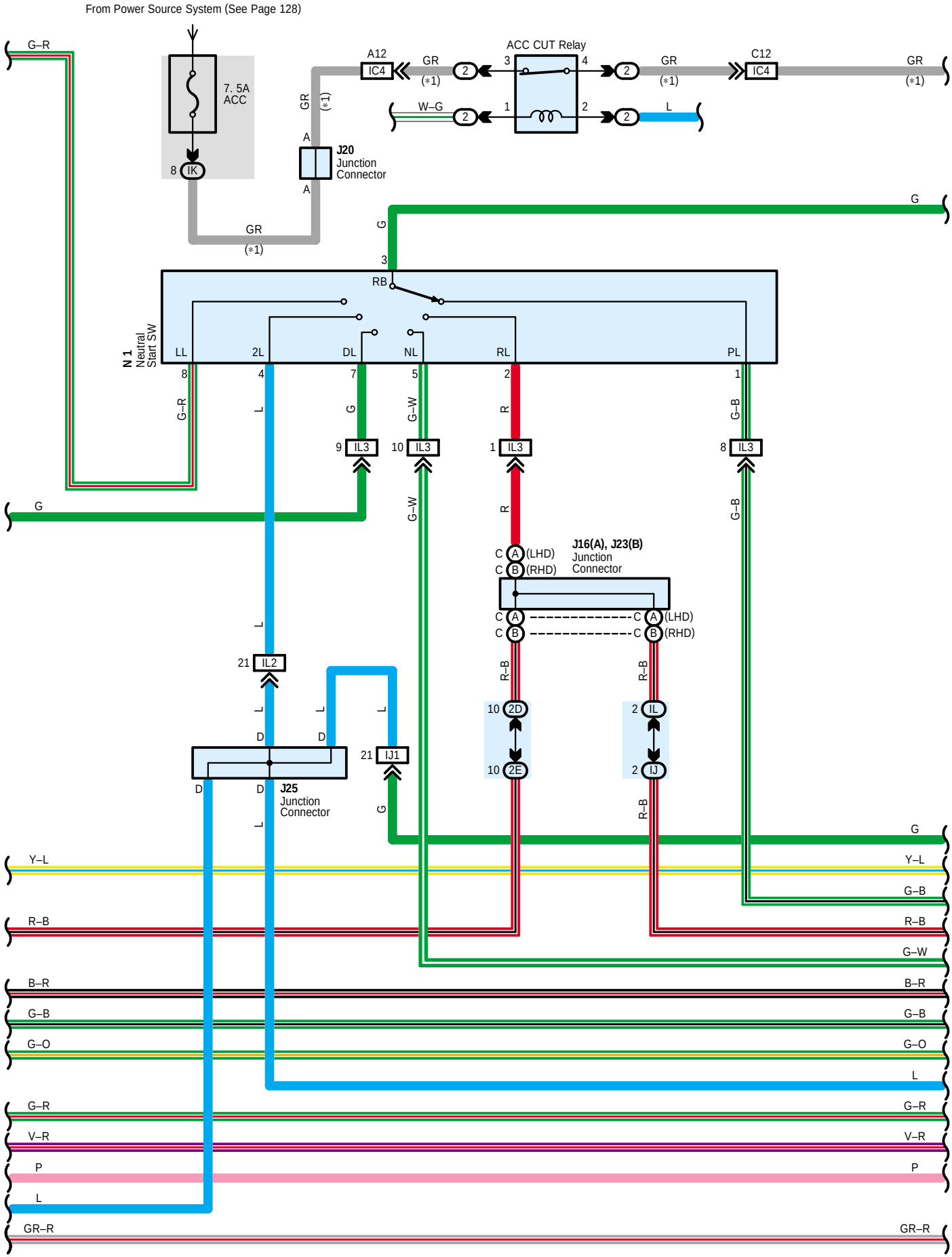

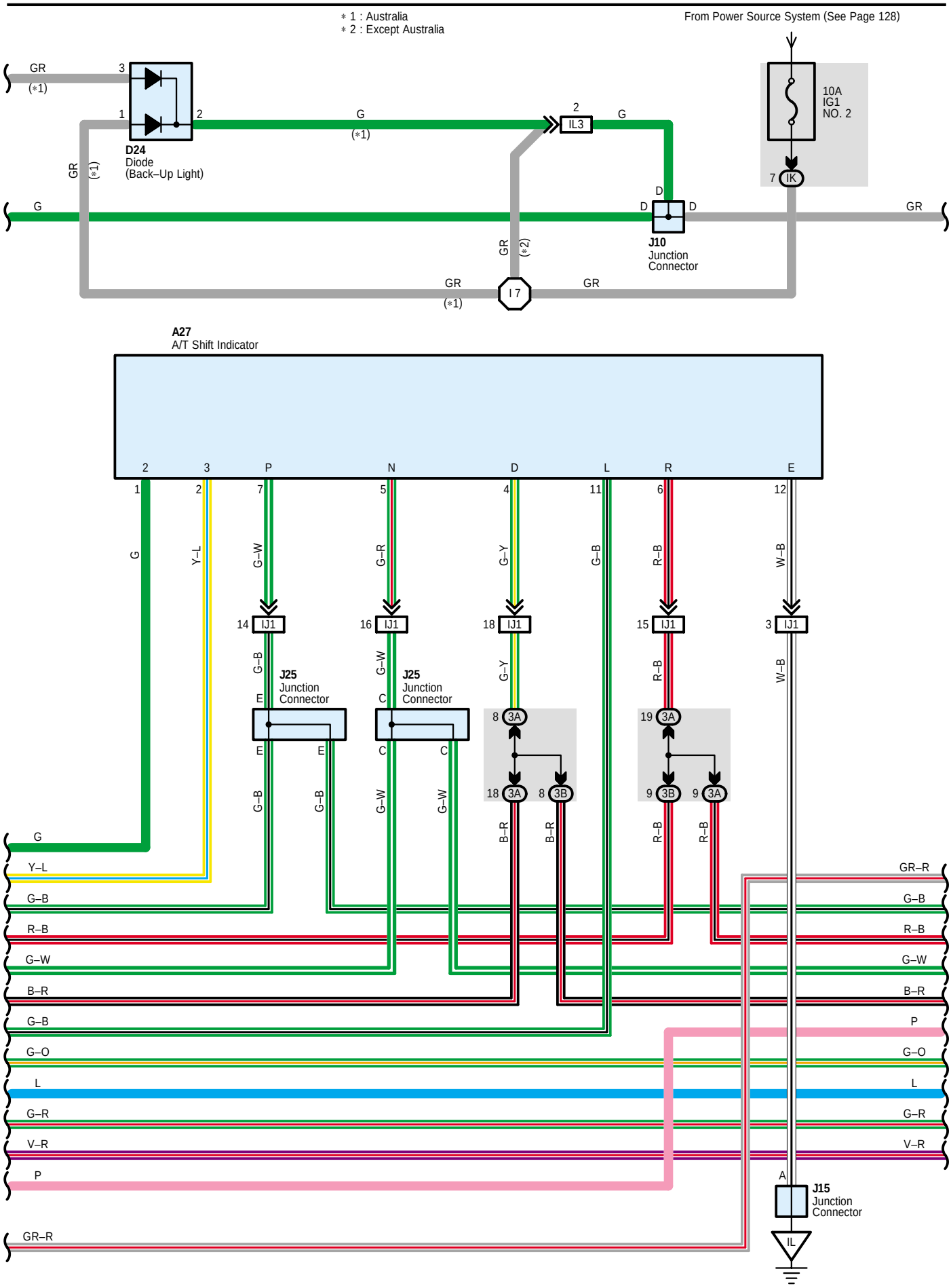
* 1 : Australia
* 2 : Except Australia
From Power Source System (See Page 128)
GR
(*1)
3
1
2
D24
Diode
(Back–Up Light)
G
(*1)
2
IL3
G
10A
IG1
NO. 2
7
IK
GR
(*1)
G
D
D
D
J10
Junction
Connector
GR
GR
(*2)
GR
(*1)
I 7
GR
A27
A/T Shift Indicator
2
3
P
N
D
L
R
E
1
2
7
5
4
11
6
12
G
Y–L
G–W
G–R
G–Y
G–B
R–B
W–B
14
IJ1
16
IJ1
18
IJ1
15
IJ1
3
IJ1
G–B
G–W
G–Y
R–B
W–B
J25
Junction
Connector
E
J25
Junction
Connector
C
8
3A
19
3A
E
E
C
C
18
3A
8
3B
9
3B
9
3A
G–B
G–B
G–W
G–W
B–R
B–R
R–B
R–B
G
Y–L
G–B
R–B
G–W
B–R
G–B
G–O
L
G–R
V–R
P
GR–R
GR–R
G–B
R–B
G–W
B–R
P
G–O
L
G–R
V–R
A
J15
Junction
Connector
IL

ECT and A/T Indicator (1GR–FE)

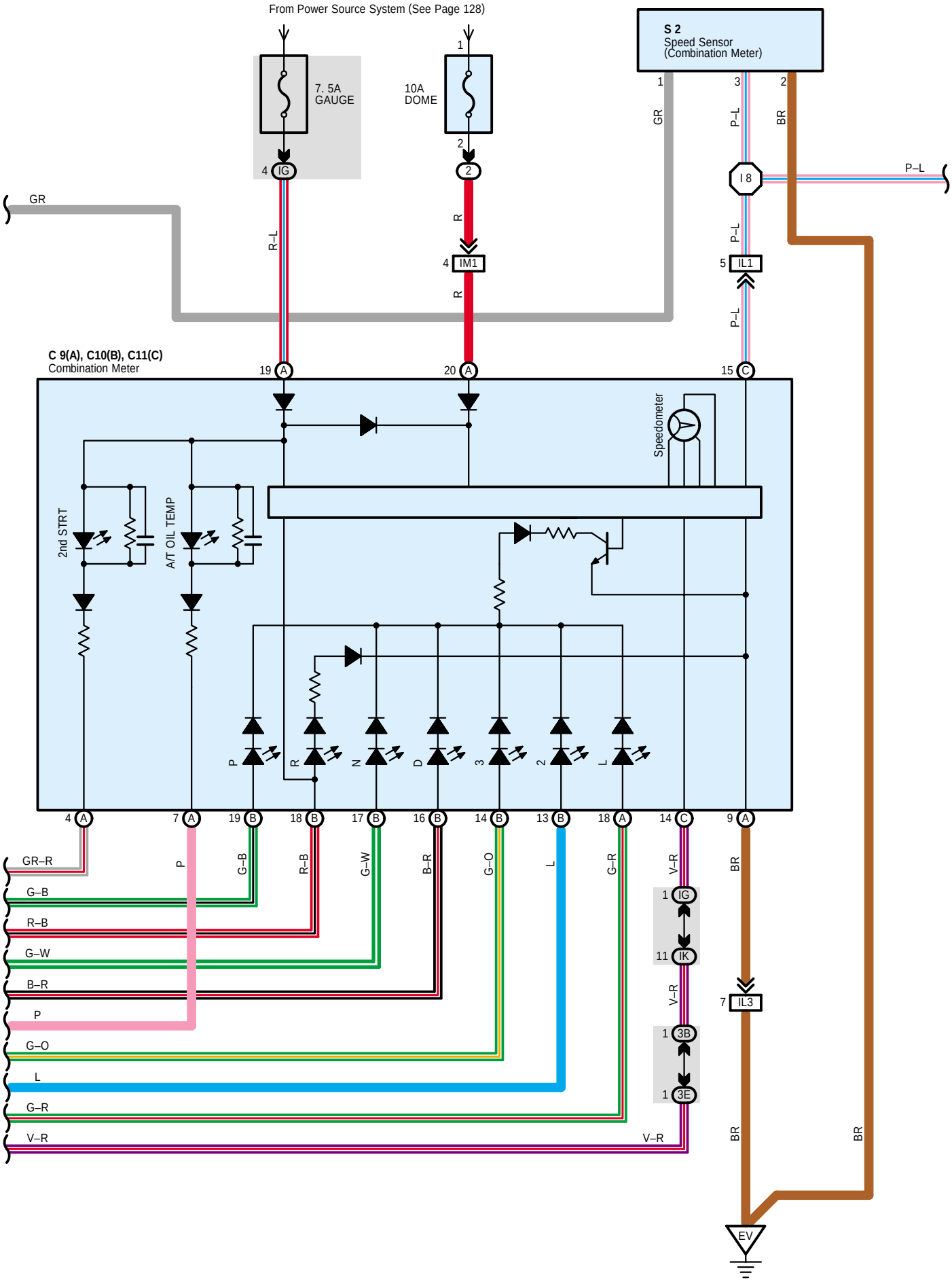

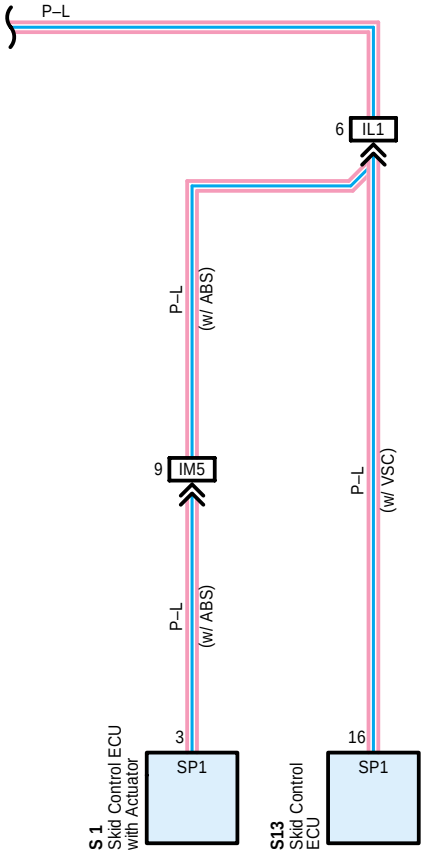
P–L
6
IL1
P–L
(w/ ABS)
9
IM5
P–L
(w/ VSC)
P–L
(w/ ABS)
3
SP1
16
SP1
S 1
Skid Control ECU
with Actuator
S13
Skid Control
ECU

System Outline

Previous automatic transmissions have selected each gear shift using mechanically controlled throttle hydraulic pressure, governor hydraulic pressure and lock-up hydraulic pressure. The electronically controlled transmission, however, electrically controls the line pressure, throttle pressure, lock-up pressure and accumulator pressure etc. through the solenoid valve. The electronically controlled transmission is a system which precisely controls gear shift timing and lock-up timing in response to the vehicle's driving conditions and the engine condition detected by various sensors. It makes smooth driving possible by shift selection for each gear which is the most appropriate to the driving conditions at that time, and by preventing downing, squat and gear shift shock when starting off.

1. Gear Shift Operation

When driving, the engine warm up condition is input as a signal to TERMINAL THW of the engine and ECT ECU from the water temp. sensor and the vehicle speed signal from vehicle speed sensor is input to TERMINAL SP2+ of the engine and ECT ECU. At the same time, the throttle valve opening signal from the throttle control motor and sensor is input to TERMINALS VTA1 and VTA2 of the engine and ECT ECU as throttle angle signal.
Based on these signals, the engine control module selects the best shift position for the driving conditions and sends current to the ECT solenoid.

2. Lock-Up Operation

When the engine and ECT ECU decides based on each signal that the lock-up condition has been met, the current flows through TERMINAL SL of the engine and ECT ECU to TERMINAL 7 of the ECT solenoid to GROUND, causing lock-up operation.

3. Stop Light SW Circuit

If the brake pedal is depressed (Stop light SW on) when driving in lock-up condition, a signal is input to TERMINAL STP of the engine and ECT ECU. The engine and ECT ECU operates and cuts the current to the solenoid to release lock-up.

Service Hints

E9 (A), E10 (B), E11 (C), E12 (D), E13 (E) Engine and ECT ECU

(E) 9-Ground : Approx. 12 volts with the ignition SW at ON position
(D) 6, (E) 3-Ground : Always approx. 12 volts
(A) 16-Ground : Approx. 12 volts with the ignition SW at ST position
(D) 19-Ground : Approx. 12 volts with the brake pedal depressed
(A) 6, (A) 7, (B) 6, (B) 7, (C) 1, (C) 4, (C) 7, (D) 1, (E) 15-Ground : Always continuity

N1 Neutral Start SW

3-1 : Closed with the shift lever in P position
3-2 : Closed with the shift lever in R position
3-5 : Closed with the shift lever in N position
3-7 : Closed with the shift lever in D position
3-4 : Closed with the shift lever in 2 position
3-8 : Closed with the shift lever in L position

◯ : **Parts Location**

Code		See Page
A6		38 (*1)
		58 (*10)
A14		38 (*1)
		58 (*10)
A27		48 (LHD)
		68 (RHD)
A28		48 (LHD)
		68 (RHD)
C9	A	49 (LHD)
		69 (RHD)
C10	B	49 (LHD)
		69 (RHD)
C11	C	49 (LHD)
		69 (RHD)
D6		49 (LHD)
		69 (RHD)
D24		69 (RHD)
E1		38 (*1)
		58 (*10)
E8		49 (LHD)
		69 (RHD)
E9	A	49 (LHD)
		69 (RHD)
E10	B	49 (LHD)
		69 (RHD)
E11	C	49 (LHD)
		69 (RHD)
E12	D	49 (LHD)

Code		See Page
E12	D	69 (RHD)
E13	E	49 (LHD)
		69 (RHD)
J1		39 (*1)
		59 (*10)
J2		39 (*1)
		59 (*10)
J7		50 (LHD)
		70 (RHD)
J9		50 (LHD)
		70 (RHD)
J10		50 (LHD)
		70 (RHD)
J11		50 (LHD)
		70 (RHD)
J14		50 (LHD)
		70 (RHD)
J15		50 (LHD)
		70 (RHD)
J16	A	50 (LHD)
J17		50 (LHD)
		70 (RHD)
J18		50 (LHD)
		70 (RHD)
J20		50 (LHD)
		70 (RHD)
J21		50 (LHD)
		70 (RHD)

Code		See Page
J22		50 (LHD)
		70 (RHD)
J23	B	70 (RHD)
J24		50 (LHD)
		70 (RHD)
J25		50 (LHD)
		70 (RHD)
N1		39 (*1)
		59 (*10)
S1		39 (*1)
		59 (*10)
S2		39 (*1)
		59 (*10)
S3		39 (*1)
		59 (*10)
S10		51 (LHD)
		71 (RHD)
S13		51 (LHD)
		71 (RHD)
S18		51 (LHD)
		71 (RHD)
T14		39 (*1)
		59 (*10)
T15		39 (*1)
		59 (*10)
W3		39 (*1)
		59 (*10)

▭ : **Relay Blocks**

Code	See Page	Relay Blocks (Relay Block Location)
2	23	Engine Room R/B (Engine Compartment Left)

* 1 : LHD 1GR-FE * 2 : LHD 3RZ-FE * 3 : LHD 1KD-FTV * 4 : LHD 1KZ-TE * 5 : LHD 5L-E * 6 : LHD 5-Door * 7 : LHD 3-Door
* 8 : LHD 8Way Power Seat * 9 : LHD Except 8Way Power Seat * 10 : RHD 1GR-FE * 11 : RHD 3RZ-FE * 12 : RHD 1KD-FTV
* 13 : RHD 1KZ-TE * 14 : RHD 5L-E * 15 : RHD 5-Door * 16 : RHD 3-Door * 17 : RHD 8Way Power Seat
* 18 : RHD Except 8Way Power Seat

: **Junction Block and Wire Harness Connector**

Code	See Page	Junction Block and Wire Harness (Connector Location)
IG	27 (LHD)	Instrument Panel Wire and Driver Side J/B (Lower Finish Panel)
	29 (RHD)	
IJ	27 (LHD)	
	29 (RHD)	
IK	27 (LHD)	
	29 (RHD)	
IL	27 (LHD)	
	29 (RHD)	
1A	32 (LHD)	Instrument Panel Wire and J/B No.1 (Instrument Panel Reinforcement Left)
	32 (RHD)	Instrument Panel Wire and J/B No.1 (Instrument Panel Reinforcement Right)
1E	32 (LHD)	Instrument Panel Wire and J/B No.1 (Instrument Panel Reinforcement Left)
	32 (RHD)	Instrument Panel Wire and J/B No.1 (Instrument Panel Reinforcement Right)
2C	34	Instrument Panel Wire and J/B No.2 (Instrument Panel Reinforcement Center)
2D		
2E		
3A	36 (LHD)	Instrument Panel Wire and J/B No.3 (Instrument Panel Reinforcement Right)
	36 (RHD)	Instrument Panel Wire and J/B No.3 (Instrument Panel Reinforcement Left)
3B	36 (LHD)	Instrument Panel Wire and J/B No.3 (Instrument Panel Reinforcement Right)
	36 (RHD)	Instrument Panel Wire and J/B No.3 (Instrument Panel Reinforcement Left)
3E	36 (LHD)	Instrument Panel Wire and J/B No.3 (Instrument Panel Reinforcement Right)
	36 (RHD)	Instrument Panel Wire and J/B No.3 (Instrument Panel Reinforcement Left)

: **Connector Joining Wire Harness and Wire Harness**

Code	See Page	Joining Wire Harness and Wire Harness (Connector Location)
IC3	88 (LHD)	Instrument Panel Wire and Engine Room Main Wire (Left Kick Panel)
	112 (RHD)	
IC4	88 (LHD)	
	112 (RHD)	
IF1	90 (LHD)	Instrument Panel Wire and Instrument Panel Wire (Near the J/B No.1)
	114 (RHD)	
IJ1	92 (LHD)	Instrument Panel Wire and Switch Wire (Front Side of the Console Box)
	116 (RHD)	
IL1	92 (LHD)	Engine Wire and Instrument Panel Wire (Right Side of the Blower Unit)
	116 (RHD)	Engine Wire and Instrument Panel Wire (Left Side of the Blower Unit)
IL2	92 (LHD)	Engine Wire and Instrument Panel Wire (Right Side of the Blower Unit)
	116 (RHD)	Engine Wire and Instrument Panel Wire (Left Side of the Blower Unit)
IL3	92 (LHD)	Engine Wire and Instrument Panel Wire (Right Side of the Blower Unit)
	116 (RHD)	Engine Wire and Instrument Panel Wire (Left Side of the Blower Unit)
IM1	92 (LHD)	Instrument Panel Wire and Engine Room Main Wire (Right Kick Panel)
	116 (RHD)	
IM4	92 (LHD)	
IM5	92 (LHD)	
	116 (RHD)	

▽ : **Ground Points**

Code	See Page	Ground Points Location
EB	78 (*1)	Front Left Fender
	102 (*10)	
EU	78 (*1)	Rear Side of Right Bank Cylinder Block
	102 (*10)	
EV	78 (*1)	Rear Side of Left Bank Cylinder Block
	102 (*10)	
IL	88 (LHD)	Near the Right Side of Steering Column
	112 (RHD)	Instrument Panel Brace RH
IN	88 (LHD)	Right Kick Panel
	112 (RHD)	Left Kick Panel

⬡ : **Splice Points**

Code	See Page	Wire Harness with Splice Points	Code	See Page	Wire Harness with Splice Points
E11	78 (*1)	Engine Wire	I7	114 (RHD)	Instrument Panel Wire
	102 (*10)		I8	90 (LHD)	Engine Wire
I7	90 (LHD)	Instrument Panel Wire		114 (RHD)	

* 1 : LHD 1GR-FE * 2 : LHD 3RZ-FE * 3 : LHD 1KD-FTV * 4 : LHD 1KZ-TE * 5 : LHD 5L-E * 6 : LHD 5-Door * 7 : LHD 3-Door
* 8 : LHD 8Way Power Seat * 9 : LHD Except 8Way Power Seat * 10 : RHD 1GR-FE * 11 : RHD 3RZ-FE * 12 : RHD 1KD-FTV
* 13 : RHD 1KZ-TE * 14 : RHD 5L-E * 15 : RHD 5-Door * 16 : RHD 3-Door * 17 : RHD 8Way Power Seat
* 18 : RHD Except 8Way Power Seat

ECT and A/T Indicator (3RZ–FE Unleaded Gasoline)

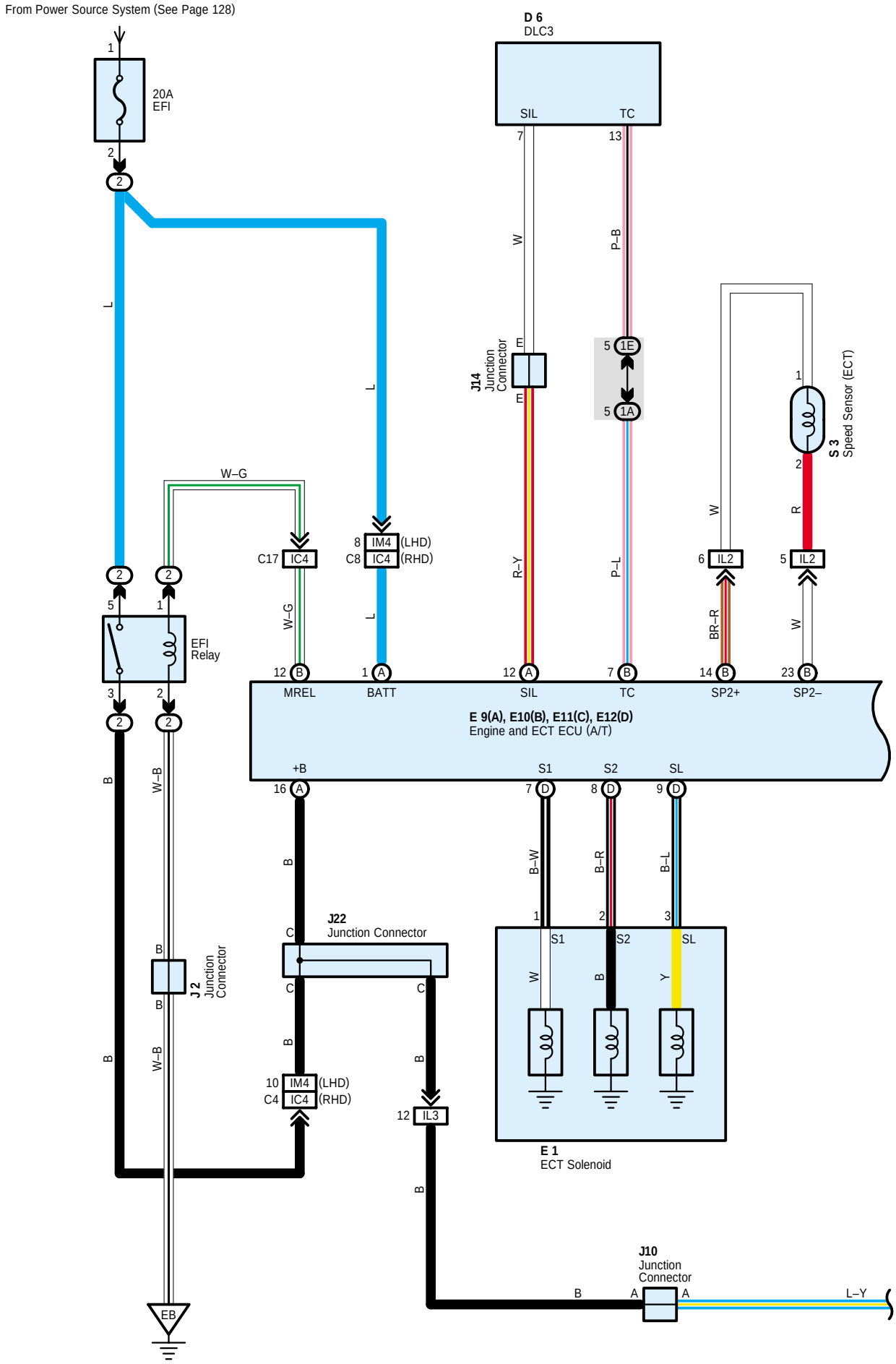

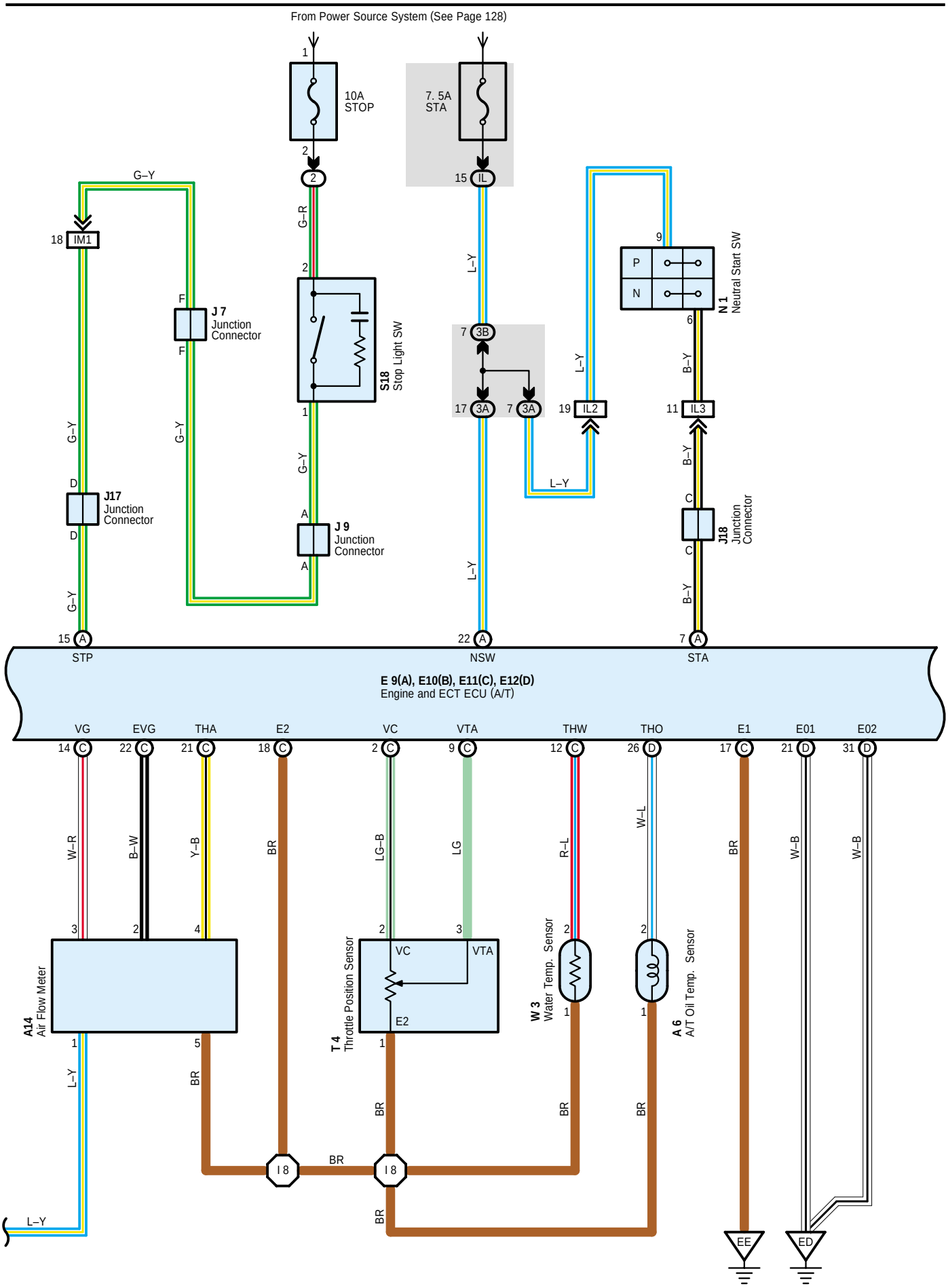
From Power Source System (See Page 128)
10A
STOP
7. 5A
STA
G–Y
IM1
J 7
Junction
Connector
G–R
S18
Stop Light SW
L–Y
3B
3A
IL
IL2
IL3
N 1
Neutral Start SW
P
N
B–Y
J17
Junction
Connector
J 9
Junction
Connector
J18
Junction
Connector
STP
NSW
STA
E 9(A), E10(B), E11(C), E12(D)
Engine and ECT ECU (A/T)
VG
EVG
THA
E2
VC
VTA
THW
THO
E1
E01
E02
W–R
B–W
Y–B
BR
LG–B
LG
R–L
W–L
A14
Air Flow Meter
T 4
Throttle Position Sensor
W 3
Water Temp. Sensor
A 6
A/T Oil Temp. Sensor
I 8
EE
ED

ECT and A/T Indicator (3RZ–FE Unleaded Gasoline)

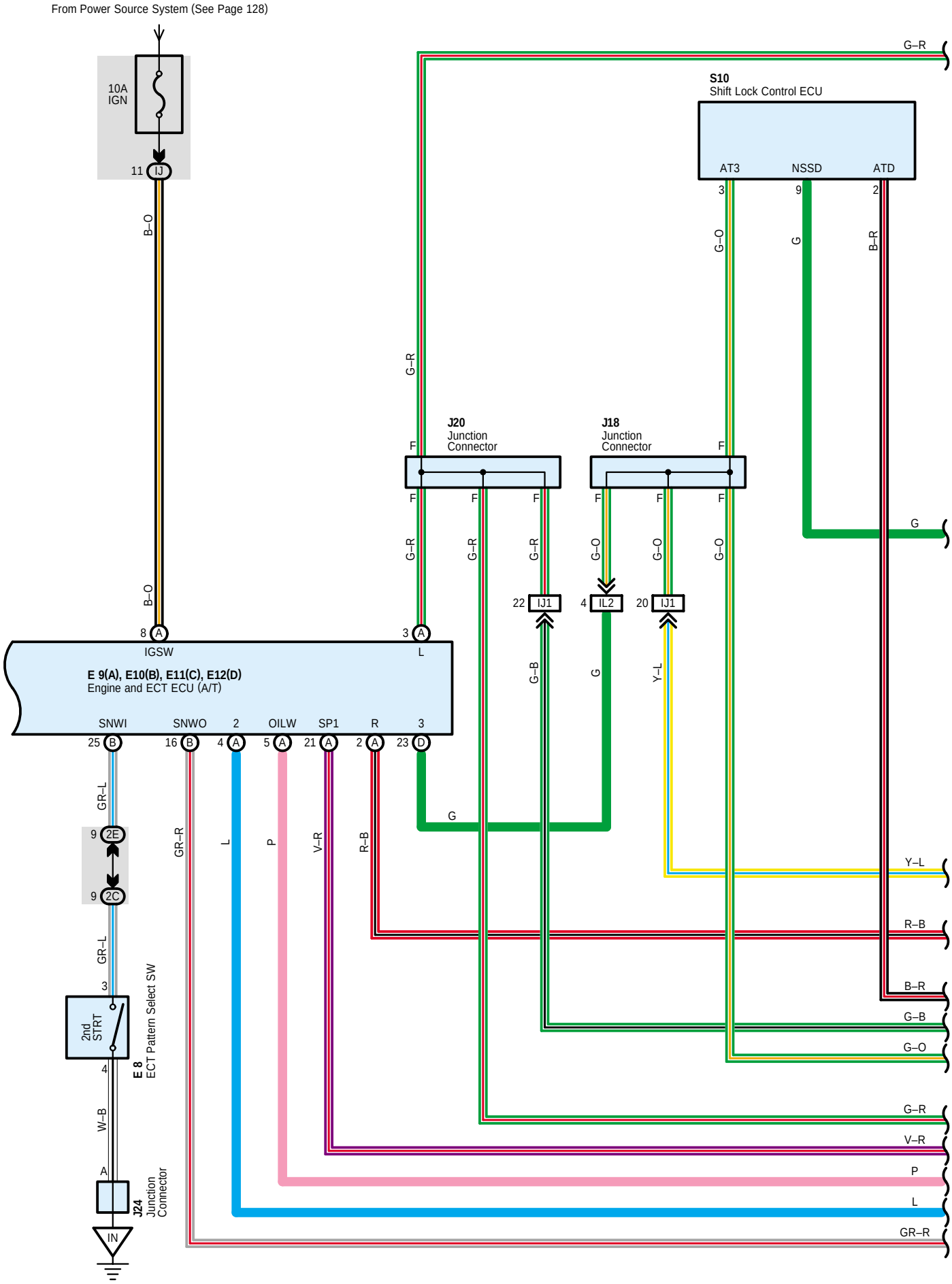

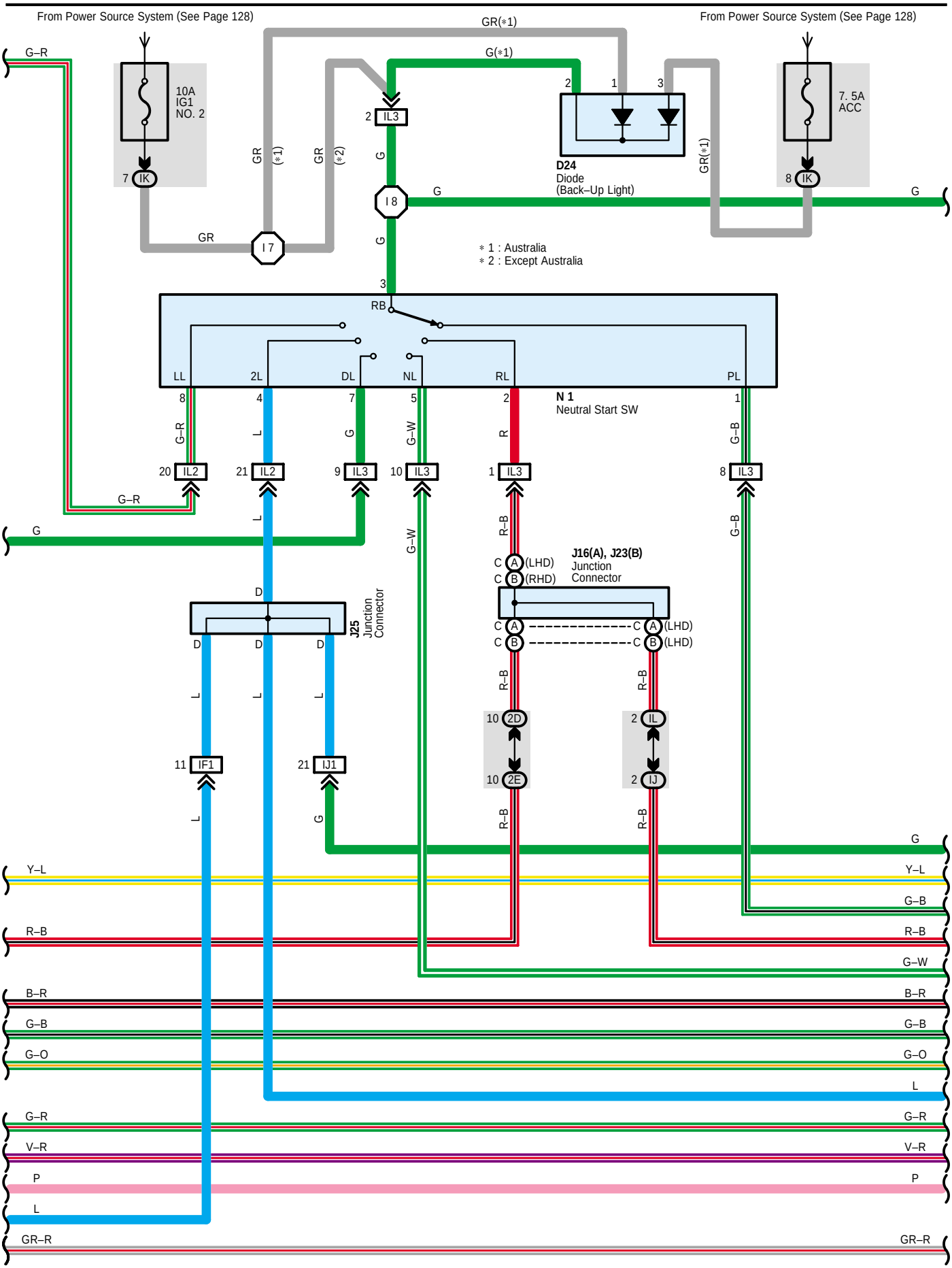
From Power Source System (See Page 128)
From Power Source System (See Page 128)
GR(*1)
G(*1)
10A
IG1
NO. 2
7. 5A
ACC
D24
Diode
(Back–Up Light)
* 1 : Australia
* 2 : Except Australia
N 1
Neutral Start SW
J16(A), J23(B)
Junction
Connector
J25
Junction
Connector
(LHD)
(RHD)
G–R
G
L
D
G–W
R
R–B
G–B
Y–L
B–R
G–O
V–R
P
GR–R

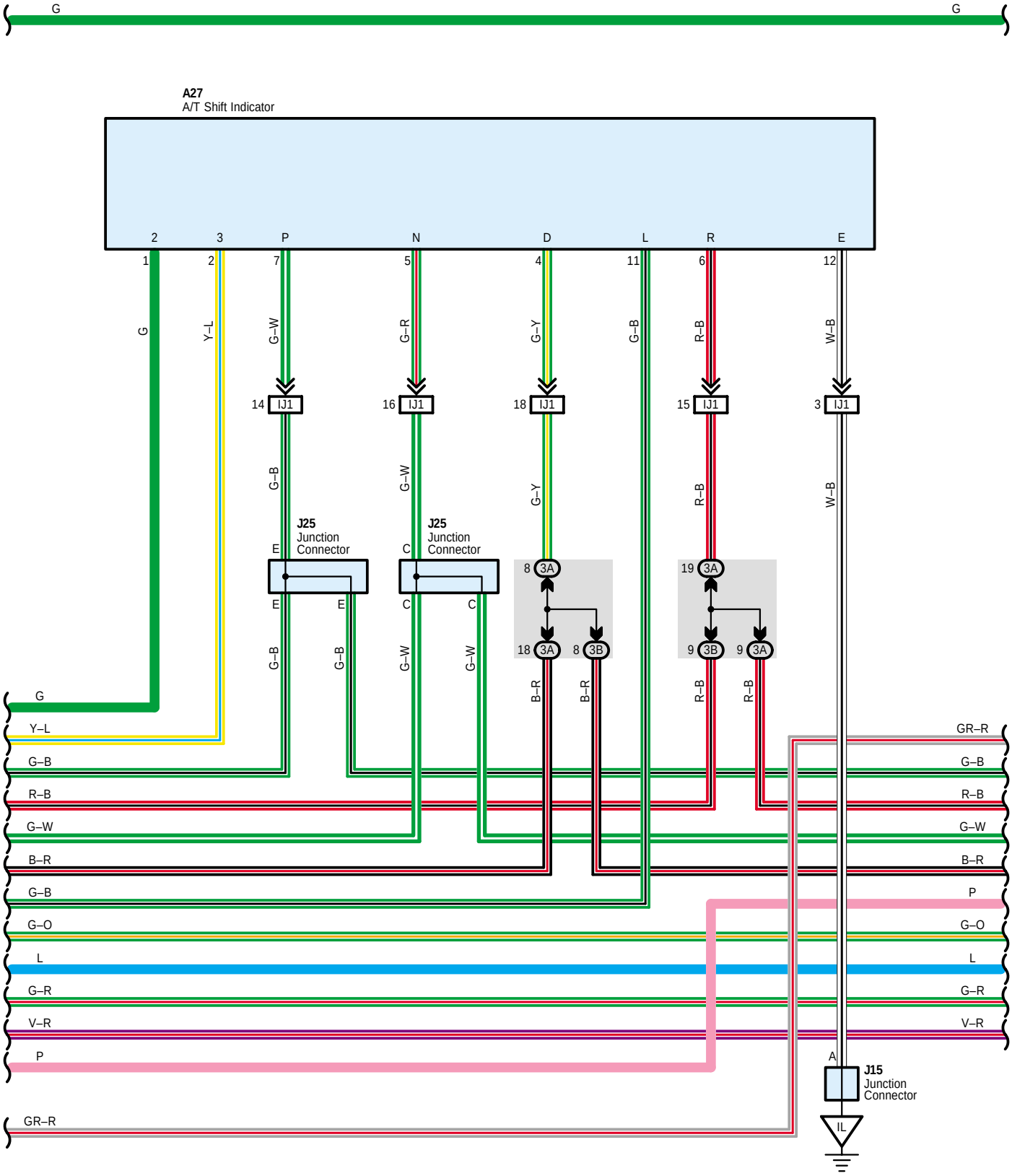
G
G
A27
A/T Shift Indicator
2
3
P
N
D
L
R
E
1
2
7
5
4
11
6
12
G
Y–L
G–W
G–R
G–Y
G–B
R–B
W–B
14 IJ1
16 IJ1
18 IJ1
15 IJ1
3 IJ1
G–B
G–W
G–Y
R–B
W–B
J25
Junction
Connector
E
C
J25
Junction
Connector
8 3A
19 3A
E
E
C
C
18 3A
8 3B
9 3B
9 3A
G–B
G–B
G–W
G–W
B–R
B–R
R–B
R–B
G
Y–L
G–B
R–B
G–W
B–R
G–B
G–O
L
G–R
V–R
P
GR–R
GR–R
G–B
R–B
G–W
B–R
P
G–O
L
G–R
V–R
A
J15
Junction
Connector
IL

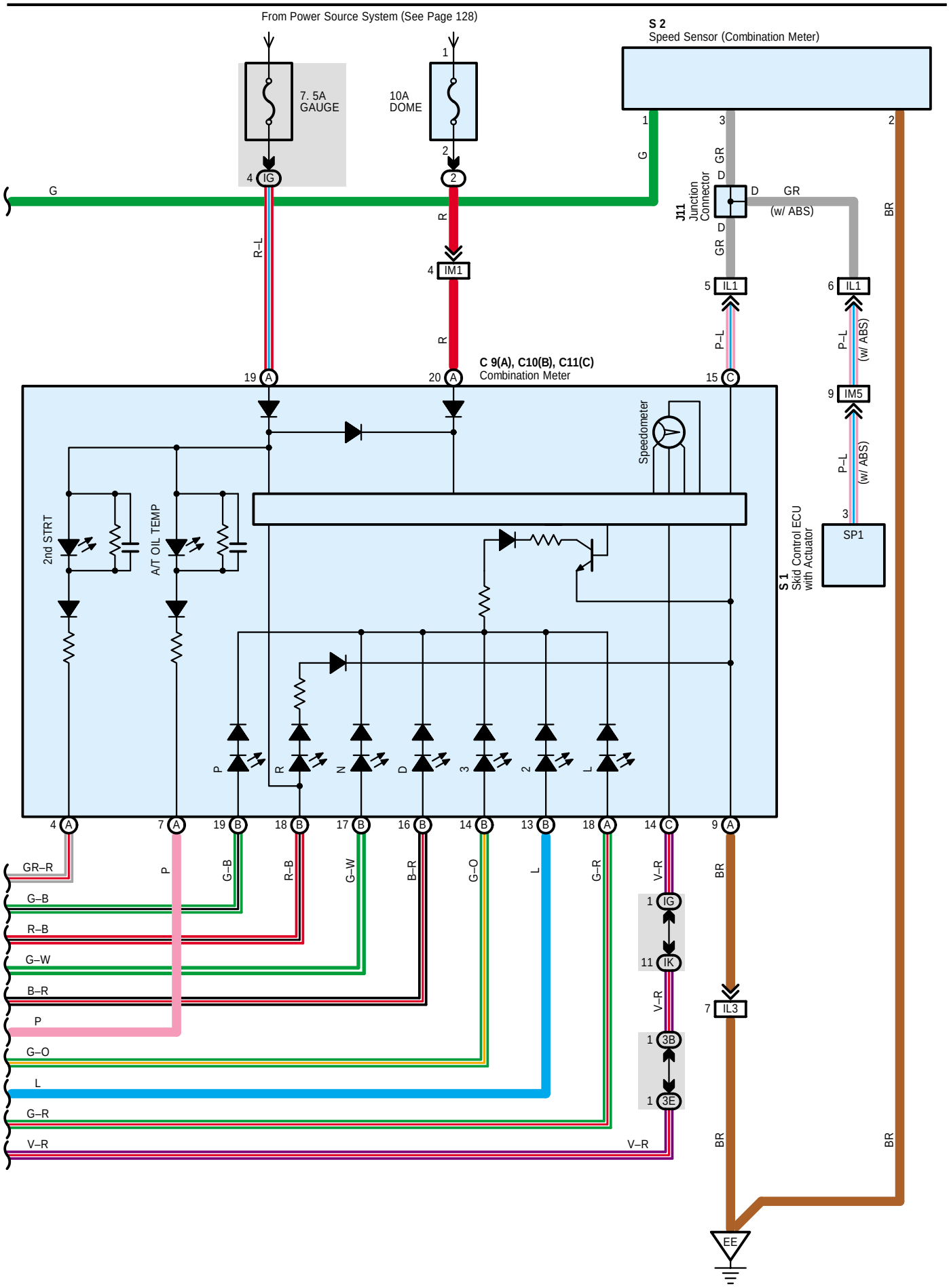
From Power Source System (See Page 128)
S 2
Speed Sensor (Combination Meter)
7. 5A
GAUGE
10A
DOME
J11
Junction
Connector
(w/ ABS)
C 9(A), C10(B), C11(C)
Combination Meter
Speedometer
2nd STRT
A/T OIL TEMP
S 1
Skid Control ECU
with Actuator
SP1
IG
IM1
IL1
IM5
IL3
IK
3B
3E
EE
GR–R
G–B
R–B
G–W
B–R
P
G–O
L
G–R
V–R
BR

System Outline

Previous automatic transmissions have selected each gear shift using mechanically controlled throttle hydraulic pressure, governor hydraulic pressure and lock–up hydraulic pressure. The electronically controlled transmission, however, electrically controls the line pressure, throttle pressure, lock–up pressure and accumulator pressure etc. through the solenoid valve. The electronically controlled transmission is a system which precisely controls gear shift timing and lock–up timing in response to the vehicle's driving conditions and the engine condition detected by various sensors. It makes smooth driving possible by shift selection for each gear which is the most appropriate to the driving conditions at that time, and by preventing downing, squat and gear shift shock when starting off.

1. Gear Shift Operation

When driving, the engine warm up condition is input as a signal to TERMINAL THW of the engine and ECT ECU from the water temp. sensor and the vehicle speed signal from speed sensor is input to TERMINAL SP2+ of the engine and ECT ECU. At the same time, the throttle valve opening signal from the throttle position sensor is input to TERMINAL VTA1 of the engine and ECT ECU as throttle angle signal.
Based on these signals, the engine and ECT ECU selects the best shift position for the driving conditions and sends current to the ECT solenoid.

2. Lock–Up Operation

When the engine and ECT ECU decides based on each signal that the lock–up condition has been met, the current flows through TERMINAL SL of the engine and ECT ECU to TERMINAL 3 of the ECT solenoid to GROUND, causing lock–up operation.

3. Stop Light SW Circuit

If the brake pedal is depressed (Stop light SW on) when driving in lock–up condition, a signal is input to TERMINAL STP of the engine and ECT ECU. The engine and ECT ECU operates and cuts the current to the solenoid to release lock–up.

Service Hints

E9 (A), E11 (C), E12 (D) Engine and ECT ECU

(A) 8–Ground : Approx. 12 volts with the ignition SW at ON position
(A) 1–Ground : Always approx. 12 volts
(A) 22–Ground : Approx. 12 volts with the ignition SW at ST position
(A) 15–Ground : Approx. 12 volts with the brake pedal depressed
(D)21, (D) 31, (C) 17–Ground : Always continuity

N1 Neutral Start SW

3–1 : Closed with the shift lever in P position
3–2 : Closed with the shift lever in R position
3–5 : Closed with the shift lever in N position
3–7 : Closed with the shift lever in D position or 3 position
3–4 : Closed with the shift lever in 2 position
3–8 : Closed with the shift lever in L position

○ : Parts Location

Code		See Page	Code		See Page	Code		See Page
A6		40 (*2)	E11	C	69 (RHD)	J22		50 (LHD)
		60 (*11)	E12	D	49 (LHD)			70 (RHD)
A14		40 (*2)			69 (RHD)	J23	B	70 (RHD)
		60 (*11)	J2		41 (*2)	J24		50 (LHD)
A27		48 (LHD)			61 (*11)			70 (RHD)
		68 (RHD)	J7		50 (LHD)	J25		50 (LHD)
C9	A	49 (LHD)			70 (RHD)			70 (RHD)
		69 (RHD)	J9		50 (LHD)	N1		41 (*2)
C10	B	49 (LHD)			70 (RHD)			61 (*11)
		69 (RHD)	J10		50 (LHD)	S1		41 (*2)
C11	C	49 (LHD)			70 (RHD)			61 (*11)
		69 (RHD)	J11		50 (LHD)	S2		41 (*2)
D6		49 (LHD)			70 (RHD)			61 (*11)
		69 (RHD)	J14		50 (LHD)	S3		41 (*2)
D24		69 (RHD)			70 (RHD)			61 (*11)
E1		40 (*2)	J15		50 (LHD)	S10		51 (LHD)
		60 (*11)			70 (RHD)			71 (RHD)
E8		49 (LHD)	J16	A	50 (LHD)	S18		51 (LHD)
		69 (RHD)	J17		50 (LHD)			71 (RHD)
E9	A	49 (LHD)			70 (RHD)	T4		41 (*2)
		69 (RHD)	J18		50 (LHD)			61 (*11)
E10	B	49 (LHD)			70 (RHD)	W3		41 (*2)
		69 (RHD)	J20		50 (LHD)			61 (*11)
E11	C	49 (LHD)			70 (RHD)			

▭ : Relay Blocks

Code	See Page	Relay Blocks (Relay Block Location)
2	23	Engine Room R/B (Engine Compartment Left)

* 1 : LHD 1GR-FE * 2 : LHD 3RZ-FE * 3 : LHD 1KD-FTV * 4 : LHD 1KZ-TE * 5 : LHD 5L-E * 6 : LHD 5-Door * 7 : LHD 3-Door
* 8 : LHD 8Way Power Seat * 9 : LHD Except 8Way Power Seat * 10 : RHD 1GR-FE * 11 : RHD 3RZ-FE * 12 : RHD 1KD-FTV
* 13 : RHD 1KZ-TE * 14 : RHD 5L-E * 15 : RHD 5-Door * 16 : RHD 3-Door * 17 : RHD 8Way Power Seat
* 18 : RHD Except 8Way Power Seat

: **Junction Block and Wire Harness Connector**

Code	See Page	Junction Block and Wire Harness (Connector Location)
IG	27 (LHD)	Instrument Panel Wire and Driver Side J/B (Lower Finish Panel)
	29 (RHD)	
IJ	27 (LHD)	
	29 (RHD)	
IK	27 (LHD)	
	29 (RHD)	
IL	27 (LHD)	
	29 (RHD)	
1A	32 (LHD)	Instrument Panel Wire and J/B No.1 (Instrument Panel Reinforcement Left)
	32 (RHD)	Instrument Panel Wire and J/B No.1 (Instrument Panel Reinforcement Right)
1E	32 (LHD)	Instrument Panel Wire and J/B No.1 (Instrument Panel Reinforcement Left)
	32 (RHD)	Instrument Panel Wire and J/B No.1 (Instrument Panel Reinforcement Right)
2C	34	Instrument Panel Wire and J/B No.2 (Instrument Panel Reinforcement Center)
2D		
2E		
3A	36 (LHD)	Instrument Panel Wire and J/B No.3 (Instrument Panel Reinforcement Right)
	36 (RHD)	Instrument Panel Wire and J/B No.3 (Instrument Panel Reinforcement Left)
3B	36 (LHD)	Instrument Panel Wire and J/B No.3 (Instrument Panel Reinforcement Right)
	36 (RHD)	Instrument Panel Wire and J/B No.3 (Instrument Panel Reinforcement Left)
3E	36 (LHD)	Instrument Panel Wire and J/B No.3 (Instrument Panel Reinforcement Right)
	36 (RHD)	Instrument Panel Wire and J/B No.3 (Instrument Panel Reinforcement Left)

: **Connector Joining Wire Harness and Wire Harness**

Code	See Page	Joining Wire Harness and Wire Harness (Connector Location)
IC4	88 (LHD)	Instrument Panel Wire and Engine Room Main Wire (Left Kick Panel)
	112 (RHD)	
IF1	90 (LHD)	Instrument Panel Wire and Instrument Panel Wire (Near the J/B No.1)
	114 (RHD)	
IJ1	92 (LHD)	Instrument Panel Wire and Switch Wire (Front Side of the Console Box)
	116 (RHD)	
IL1	92 (LHD)	Engine Wire and Instrument Panel Wire (Right Side of the Blower Unit)
	116 (RHD)	Engine Wire and Instrument Panel Wire (Left Side of the Blower Unit)
IL2	92 (LHD)	Engine Wire and Instrument Panel Wire (Right Side of the Blower Unit)
	116 (RHD)	Engine Wire and Instrument Panel Wire (Left Side of the Blower Unit)
IL3	92 (LHD)	Engine Wire and Instrument Panel Wire (Right Side of the Blower Unit)
	116 (RHD)	Engine Wire and Instrument Panel Wire (Left Side of the Blower Unit)
IM1	92 (LHD)	Instrument Panel Wire and Engine Room Main Wire (Right Kick Panel)
	116 (RHD)	
IM4	92 (LHD)	
IM5	92 (LHD)	
	116 (RHD)	

▽ : **Ground Points**

Code	See Page	Ground Points Location
EB	80 (*2)	Front Left Fender
	104 (*11)	
ED	80 (*2)	Ignition Coil Bracket
	104 (*11)	
EE	80 (*2)	Intake Manifold
	104 (*11)	
IL	88 (LHD)	Near the Right Side of Steering Column
	112 (RHD)	Instrument Panel Brace RH
IN	88 (LHD)	Right Kick Panel
	112 (RHD)	Left Kick Panel

◯ : **Splice Points**

Code	See Page	Wire Harness with Splice Points	Code	See Page	Wire Harness with Splice Points
I7	90 (LHD)	Instrument Panel Wire	I8	90 (LHD)	Engine Wire
	114 (RHD)			114 (RHD)	

* 1 : LHD 1GR-FE * 2 : LHD 3RZ-FE * 3 : LHD 1KD-FTV * 4 : LHD 1KZ-TE * 5 : LHD 5L-E * 6 : LHD 5-Door * 7 : LHD 3-Door
* 8 : LHD 8Way Power Seat * 9 : LHD Except 8Way Power Seat * 10 : RHD 1GR-FE * 11 : RHD 3RZ-FE * 12 : RHD 1KD-FTV
* 13 : RHD 1KZ-TE * 14 : RHD 5L-E * 15 : RHD 5-Door * 16 : RHD 3-Door * 17 : RHD 8Way Power Seat
* 18 : RHD Except 8Way Power Seat

ECT and A/T Indicator (3RZ–FE Leaded Gasoline)

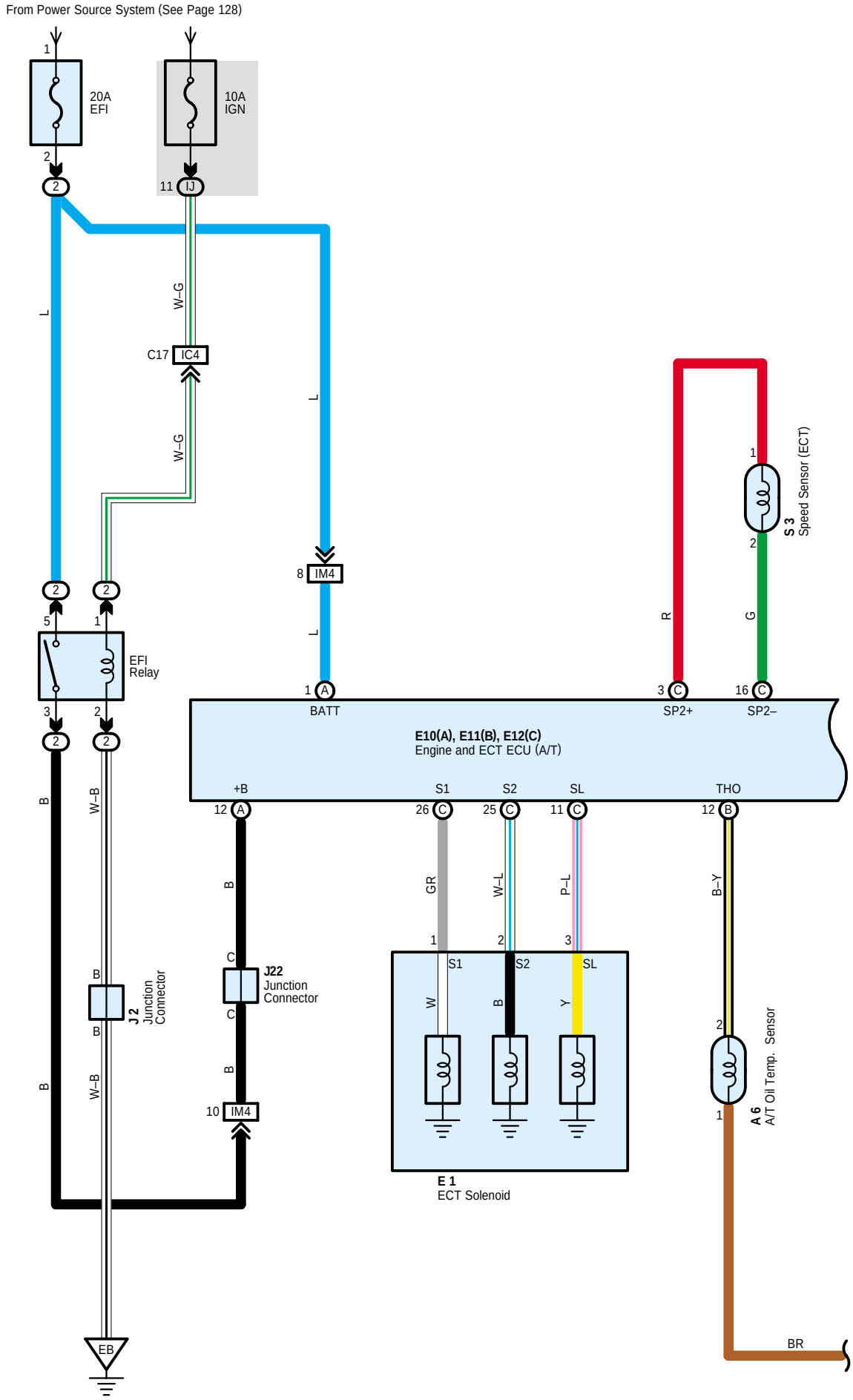

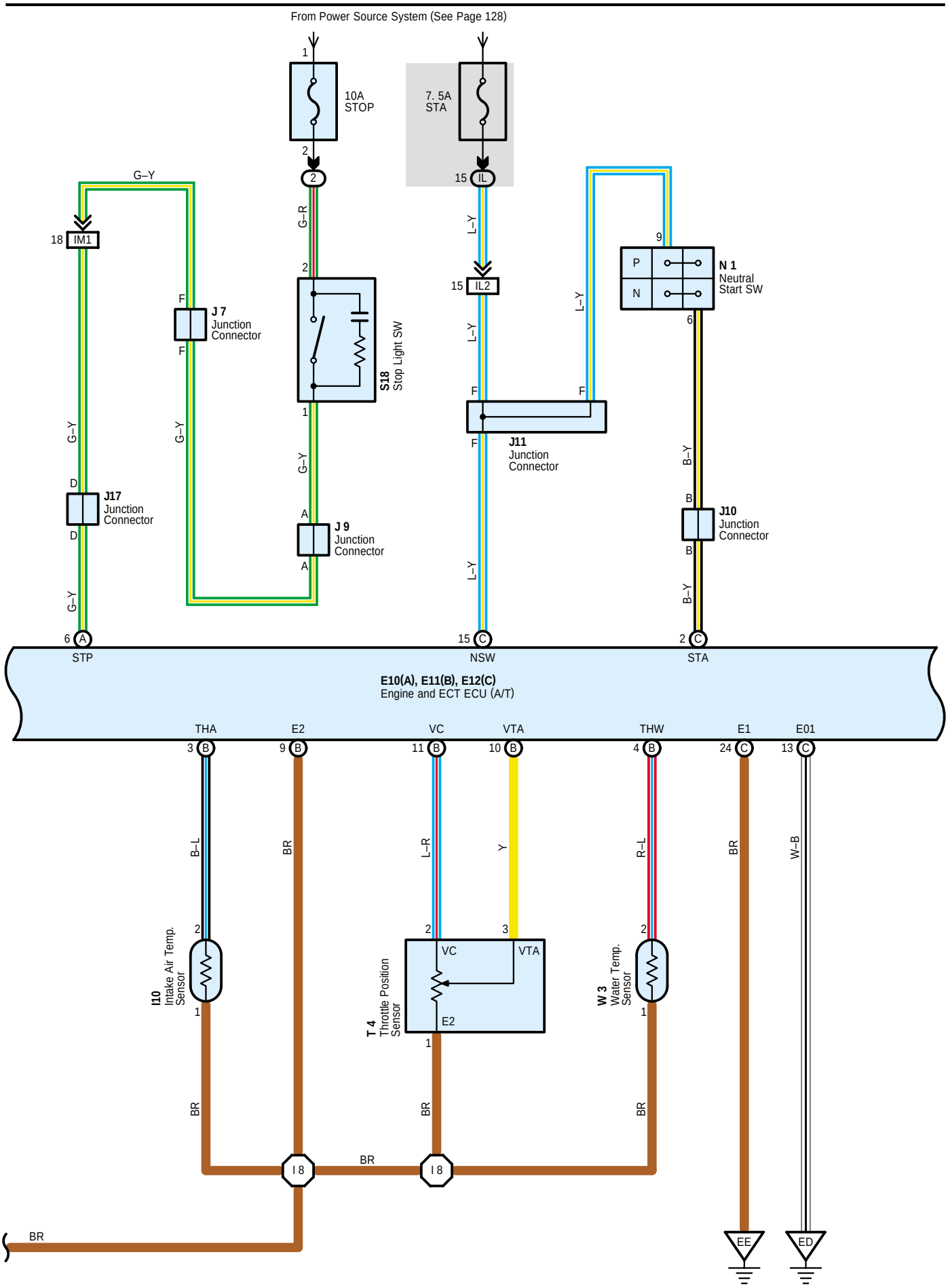
From Power Source System (See Page 128)
10A
STOP
7. 5A
STA
G–Y
IM1
J 7
Junction
Connector
G–R
S18
Stop Light SW
L–Y
IL2
N 1
Neutral
Start SW
P
N
J11
Junction
Connector
B–Y
J17
Junction
Connector
J 9
Junction
Connector
J10
Junction
Connector
STP
NSW
STA
E10(A), E11(B), E12(C)
Engine and ECT ECU (A/T)
THA
E2
VC
VTA
THW
E1
E01
B–L
BR
L–R
Y
R–L
W–B
I10
Intake Air Temp.
Sensor
T 4
Throttle Position
Sensor
W 3
Water Temp.
Sensor
I 8
EE
ED

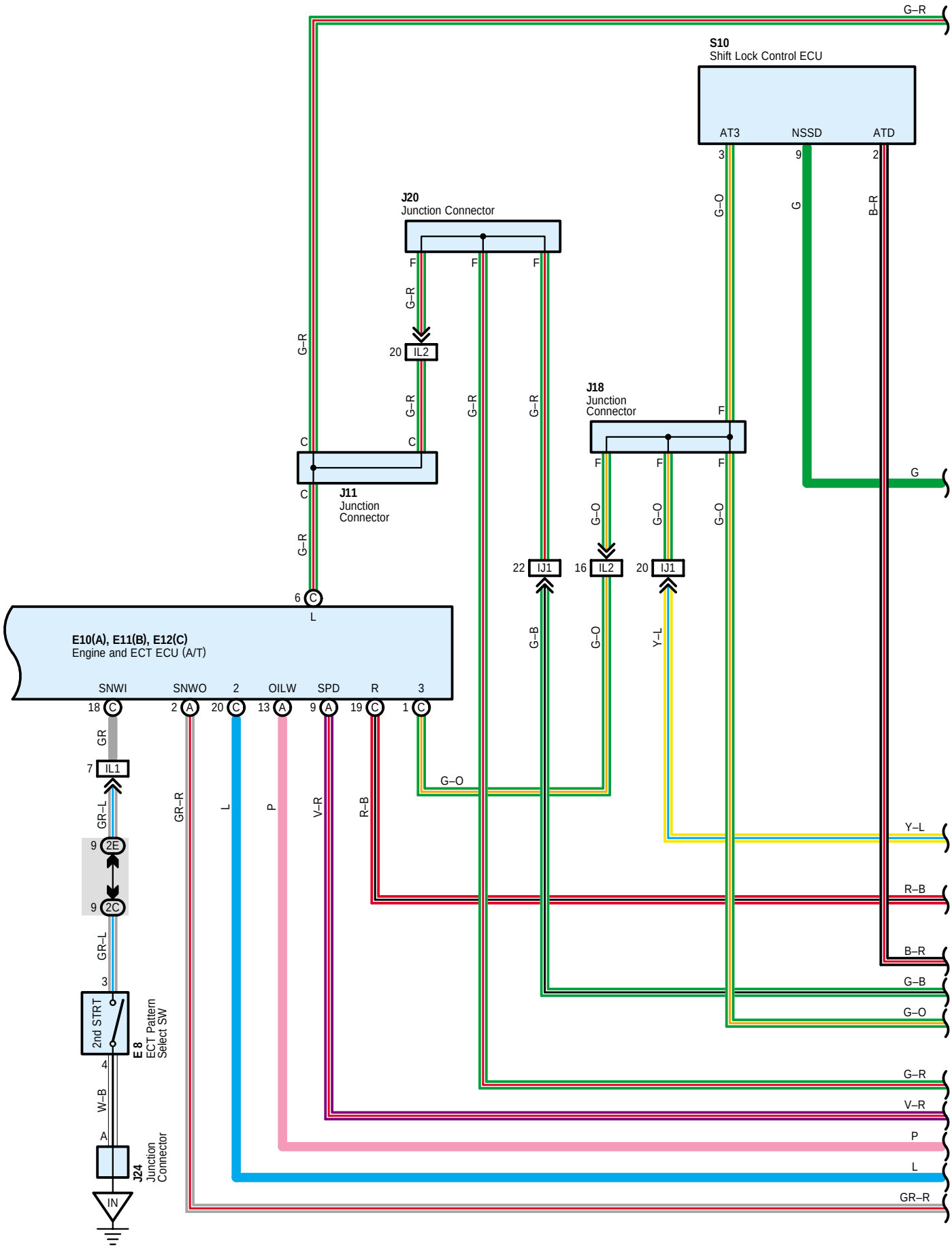
S10
Shift Lock Control ECU
AT3
NSSD
ATD
J20
Junction Connector
J18
Junction Connector
J11
Junction Connector
E10(A), E11(B), E12(C)
Engine and ECT ECU (A/T)
SNWI
SNWO
OILW
SPD
IL1
IL2
IJ1
2nd STRT
E 8
ECT Pattern Select SW
J24
Junction Connector
IN
G–R
G
B–R
G–O
Y–L
R–B
B–R
G–B
V–R
P
L
GR–R
GR
GR–L
W–B

From Power Source System (See Page 128)

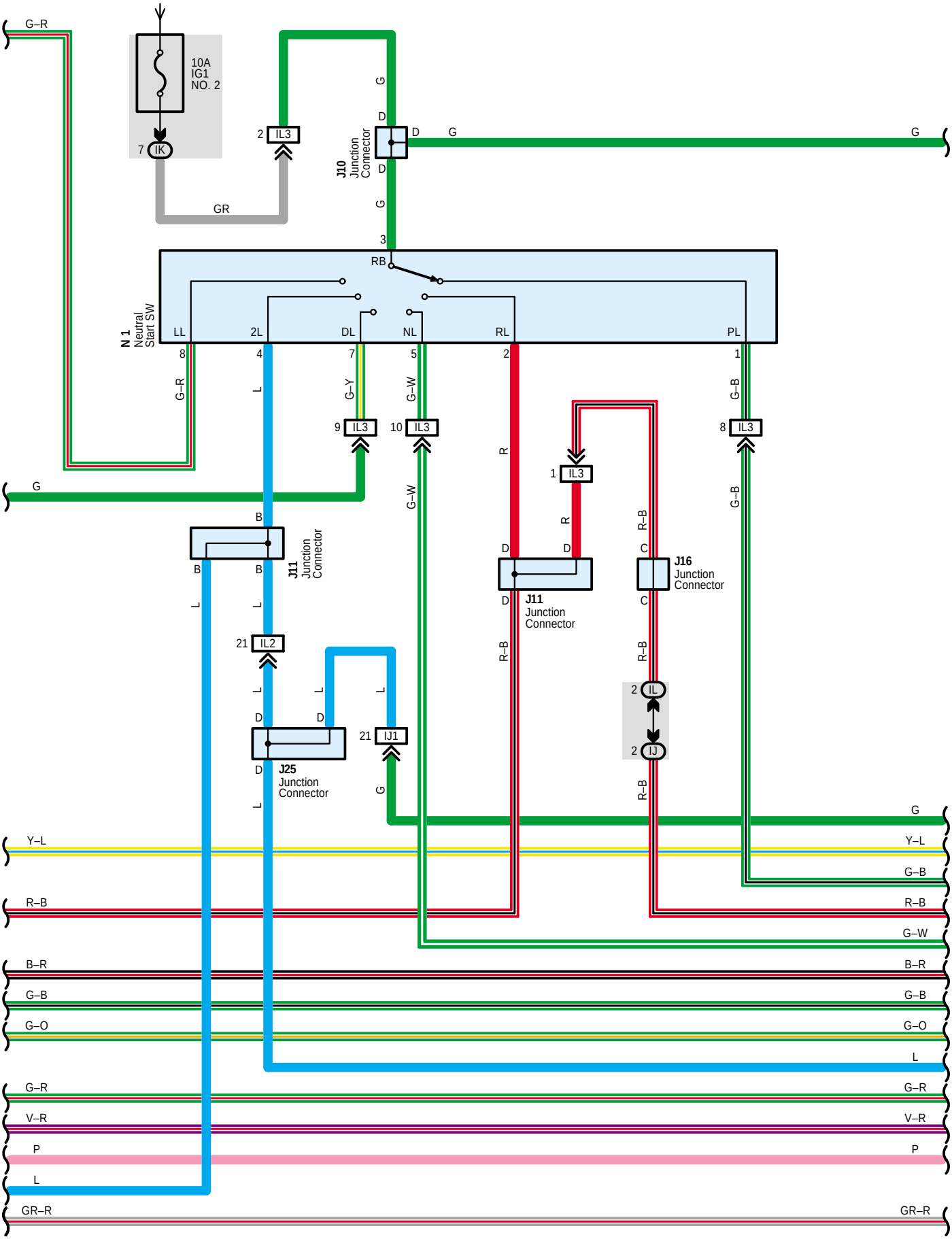

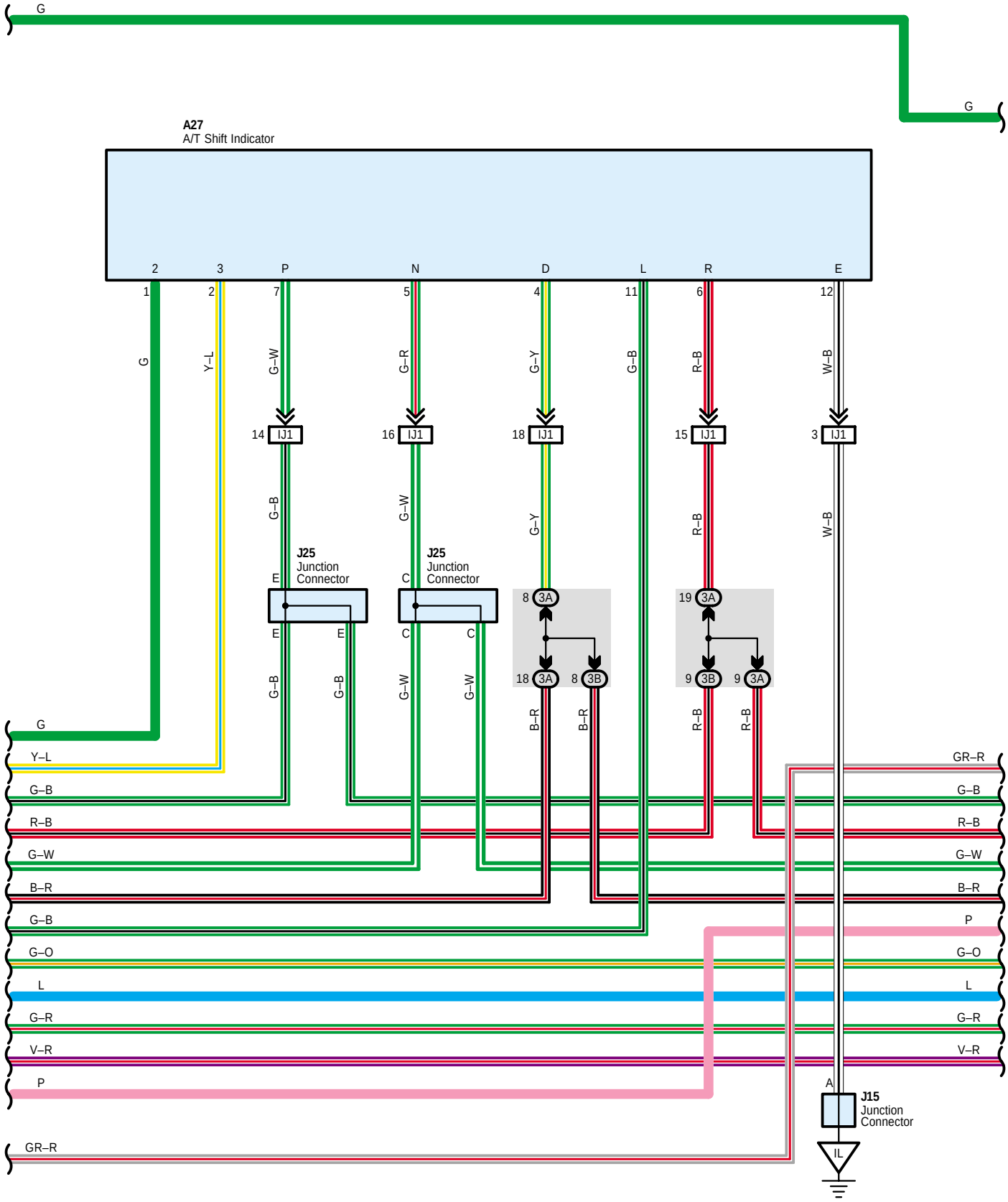
A27
A/T Shift Indicator
2
3
P
N
D
L
R
E
1
2
7
5
4
11
6
12
G
Y–L
G–W
G–R
G–Y
G–B
R–B
W–B
14 IJ1
16 IJ1
18 IJ1
15 IJ1
3 IJ1
G–B
G–W
G–Y
R–B
W–B
J25
Junction
Connector
E
C
8 3A
19 3A
18 3A
8 3B
9 3B
9 3A
B–R
B–R
R–B
R–B
G
Y–L
G–B
R–B
G–W
B–R
G–B
G–O
L
G–R
V–R
P
GR–R
A
J15
Junction
Connector
IL

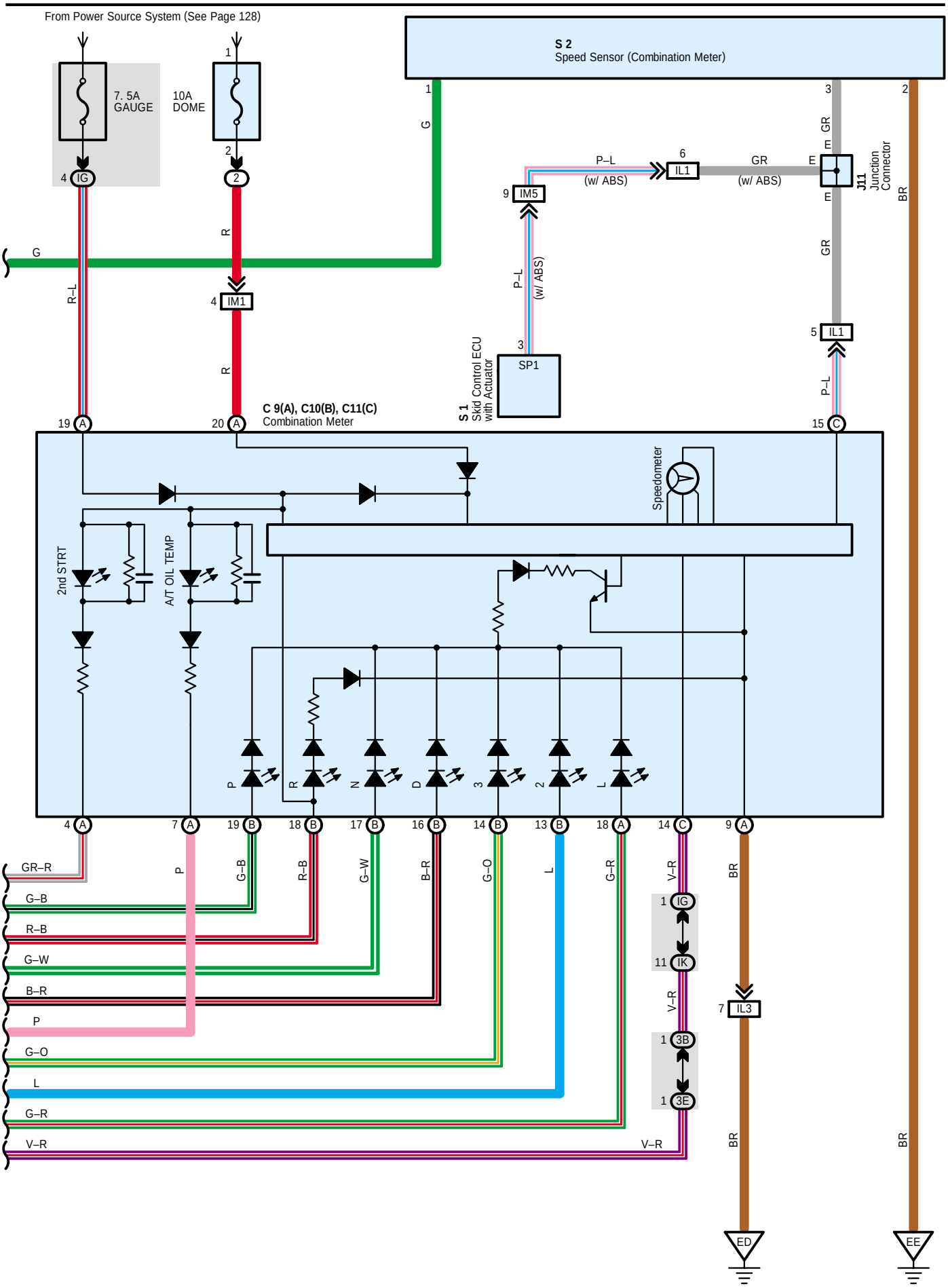
From Power Source System (See Page 128)
7. 5A GAUGE
10A DOME
S 2
Speed Sensor (Combination Meter)
P–L
(w/ ABS)
GR
(w/ ABS)
IL1
IM5
IM1
J11 Junction Connector
S 1 Skid Control ECU with Actuator
SP1
C 9(A), C10(B), C11(C)
Combination Meter
Speedometer
2nd STRT
A/T OIL TEMP
IG
IK
3B
3E
IL3
ED
EE
GR–R
G–B
R–B
G–W
B–R
P
G–O
L
G–R
V–R
BR

ECT and A/T Indicator (3RZ-FE Leaded Gasoline)

System Outline

Previous automatic transmissions have selected each gear shift using mechanically controlled throttle hydraulic pressure, governor hydraulic pressure and lock-up hydraulic pressure. The electronically controlled transmission, however, electrically controls the line pressure, throttle pressure, lock-up pressure and accumulator pressure etc. through the solenoid valve. The electronically controlled transmission is a system which precisely controls gear shift timing and lock-up timing in response to the vehicle's driving conditions and the engine condition detected by various sensors. It makes smooth driving possible by shift selection for each gear which is the most appropriate to the driving conditions at that time, and by preventing downing, squat and gear shift shock when starting off.

1. Gear Shift Operation

When driving, the engine warm up condition is input as a signal to TERMINAL THW of the engine and ECT ECU from the water temp. sensor and the vehicle speed signal from speed sensor is input to TERMINAL SP2+ of the engine and ECT ECU. At the same time, the throttle valve opening signal from the throttle position sensor is input to TERMINAL VTA1 of the engine and ECT ECU as throttle angle signal.
Based on these signals, the engine and ECT ECU selects the best shift position for the driving conditions and sends current to the ECT solenoid.

2. Lock-Up Operation

When the engine and ECT ECU decides based on each signal that the lock-up condition has been met, the current flows through TERMINAL SL of the engine and ECT ECU to TERMINAL 3 of the ECT solenoid to GROUND, causing lock-up operation.

3. Stop Light SW Circuit

If the brake pedal is depressed (Stop light SW on) when driving in lock-up condition, a signal is input to TERMINAL STP of the engine and ECT ECU. The engine and ECT ECU operates and cuts the current to the solenoid to release lock-up.

Service Hints

E10 (A), E12 (C) Engine and ECT ECU

(A) 1-Ground : Always approx. 12 volts
(C) 15-Ground : Approx. 12 volts with the ignition SW at ST position
(A) 6-Ground : Approx. 12 volts with the brake pedal depressed
(C) 13, (C) 24-Ground : Always continuity

N1 Neutral Start SW

3-1 : Closed with the shift lever in P position
3-2 : Closed with the shift lever in R position
3-5 : Closed with the shift lever in N position
3-7 : Closed with the shift lever in D position or 3 position
3-4 : Closed with the shift lever in 2 position
3-8 : Closed with the shift lever in L position

○ **: Parts Location**

Code		See Page	Code	See Page	Code	See Page
A6		40 (*2)	J2	41 (*2)	J24	50 (LHD)
A27		48 (LHD)	J7	50 (LHD)	J25	50 (LHD)
C9	A	49 (LHD)	J9	50 (LHD)	N1	41 (*2)
C10	B	49 (LHD)	J10	50 (LHD)	S1	41 (*2)
C11	C	49 (LHD)	J11	50 (LHD)	S2	41 (*2)
E1		40 (*2)	J15	50 (LHD)	S3	41 (*2)
E8		49 (LHD)	J16	50 (LHD)	S10	51 (LHD)
E10	A	49 (LHD)	J17	50 (LHD)	S18	51 (LHD)
E11	B	49 (LHD)	J18	50 (LHD)	T4	41 (*2)
E12	C	49 (LHD)	J20	50 (LHD)	W3	41 (*2)
I10		41 (*2)	J22	50 (LHD)		

* 1 : LHD 1GR-FE * 2 : LHD 3RZ-FE * 3 : LHD 1KD-FTV * 4 : LHD 1KZ-TE * 5 : LHD 5L-E * 6 : LHD 5-Door * 7 : LHD 3-Door
* 8 : LHD 8Way Power Seat * 9 : LHD Except 8Way Power Seat * 10 : RHD 1GR-FE * 11 : RHD 3RZ-FE * 12 : RHD 1KD-FTV
* 13 : RHD 1KZ-TE * 14 : RHD 5L-E * 15 : RHD 5-Door * 16 : RHD 3-Door * 17 : RHD 8Way Power Seat
* 18 : RHD Except 8Way Power Seat

: **Relay Blocks**

Code	See Page	Relay Blocks (Relay Block Location)
2	23	Engine Room R/B (Engine Compartment Left)

: **Junction Block and Wire Harness Connector**

Code	See Page	Junction Block and Wire Harness (Connector Location)
IG	27 (LHD)	Instrument Panel Wire and Driver Side J/B (Lower Finish Panel)
IJ		
IK		
IL		
2C	34	Instrument Panel Wire and J/B No.2 (Instrument Panel Reinforcement Center)
2E		
3A	36 (LHD)	Instrument Panel Wire and J/B No.3 (Instrument Panel Reinforcement Right)
3B		
3E		

: **Connector Joining Wire Harness and Wire Harness**

Code	See Page	Joining Wire Harness and Wire Harness (Connector Location)
IC4	88 (LHD)	Instrument Panel Wire and Engine Room Main Wire (Left Kick Panel)
IJ1	92 (LHD)	Instrument Panel Wire and Switch Wire (Front Side of the Console Box)
IL1	92 (LHD)	Engine Wire and Instrument Panel Wire (Right Side of the Blower Unit)
IL2		
IL3		
IM1	92 (LHD)	Instrument Panel Wire and Engine Room Main Wire (Right Kick Panel)
IM4		
IM5		

: **Ground Points**

Code	See Page	Ground Points Location
EB	80 (*2)	Front Left Fender
ED	80 (*2)	Ignition Coil Bracket
EE	80 (*2)	Intake Manifold
IL	88 (LHD)	Near the Right Side of Steering Column
IN	88 (LHD)	Right Kick Panel

: **Splice Points**

Code	See Page	Wire Harness with Splice Points	Code	See Page	Wire Harness with Splice Points
I8	90 (LHD)	Engine Wire			

* 1 : LHD 1GR-FE * 2 : LHD 3RZ-FE * 3 : LHD 1KD-FTV * 4 : LHD 1KZ-TE * 5 : LHD 5L-E * 6 : LHD 5-Door * 7 : LHD 3-Door
* 8 : LHD 8Way Power Seat * 9 : LHD Except 8Way Power Seat * 10 : RHD 1GR-FE * 11 : RHD 3RZ-FE * 12 : RHD 1KD-FTV
* 13 : RHD 1KZ-TE * 14 : RHD 5L-E * 15 : RHD 5-Door * 16 : RHD 3-Door * 17 : RHD 8Way Power Seat
* 18 : RHD Except 8Way Power Seat

ECT and A/T Indicator (1KD–FTV)

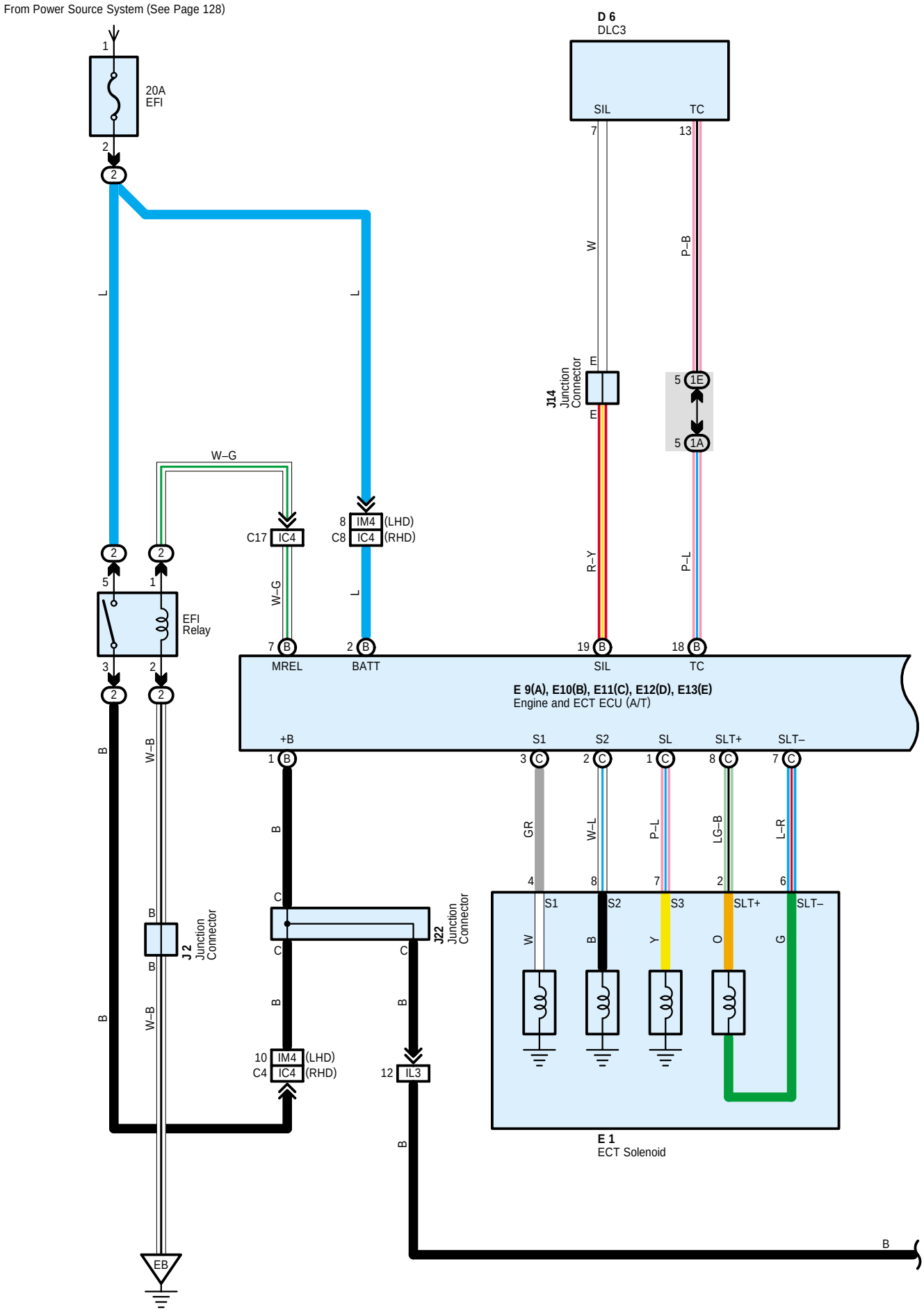

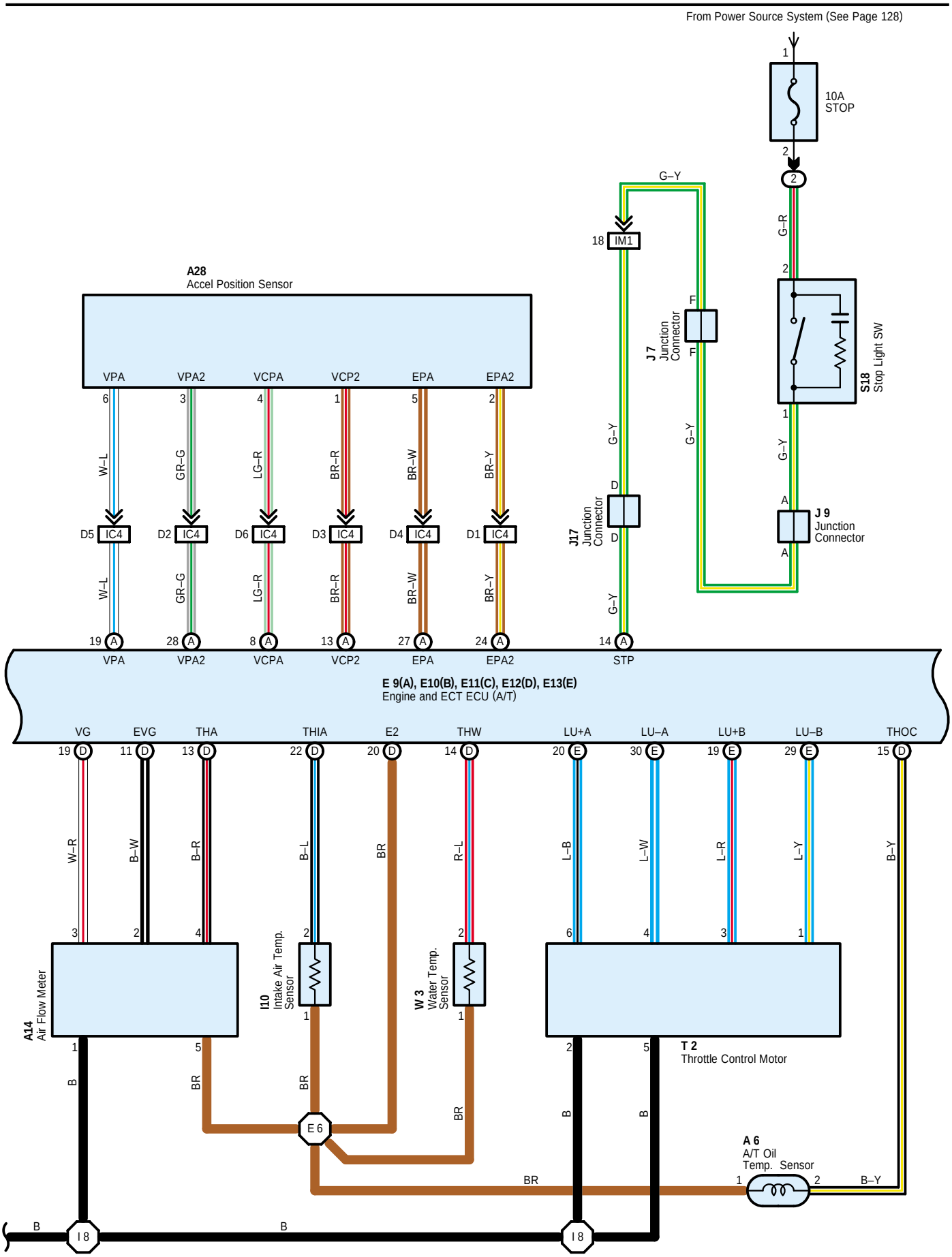
From Power Source System (See Page 128)
10A
STOP
A28
Accel Position Sensor
VPA
VPA2
VCPA
VCP2
EPA
EPA2
W–L
GR–G
LG–R
BR–R
BR–W
BR–Y
IC4
G–Y
IM1
J7
Junction
Connector
J17
Junction
Connector
J9
Junction
Connector
S18
Stop Light SW
STP
E 9(A), E10(B), E11(C), E12(D), E13(E)
Engine and ECT ECU (A/T)
VG
EVG
THA
THIA
E2
THW
LU+A
LU–A
LU+B
LU–B
THOC
W–R
B–W
B–R
B–L
BR
R–L
L–B
L–W
L–R
L–Y
B–Y
A14
Air Flow Meter
I10
Intake Air Temp.
Sensor
W3
Water Temp.
Sensor
T2
Throttle Control Motor
E6
A6
A/T Oil
Temp. Sensor
I8
B

ECT and A/T Indicator (1KD–FTV)

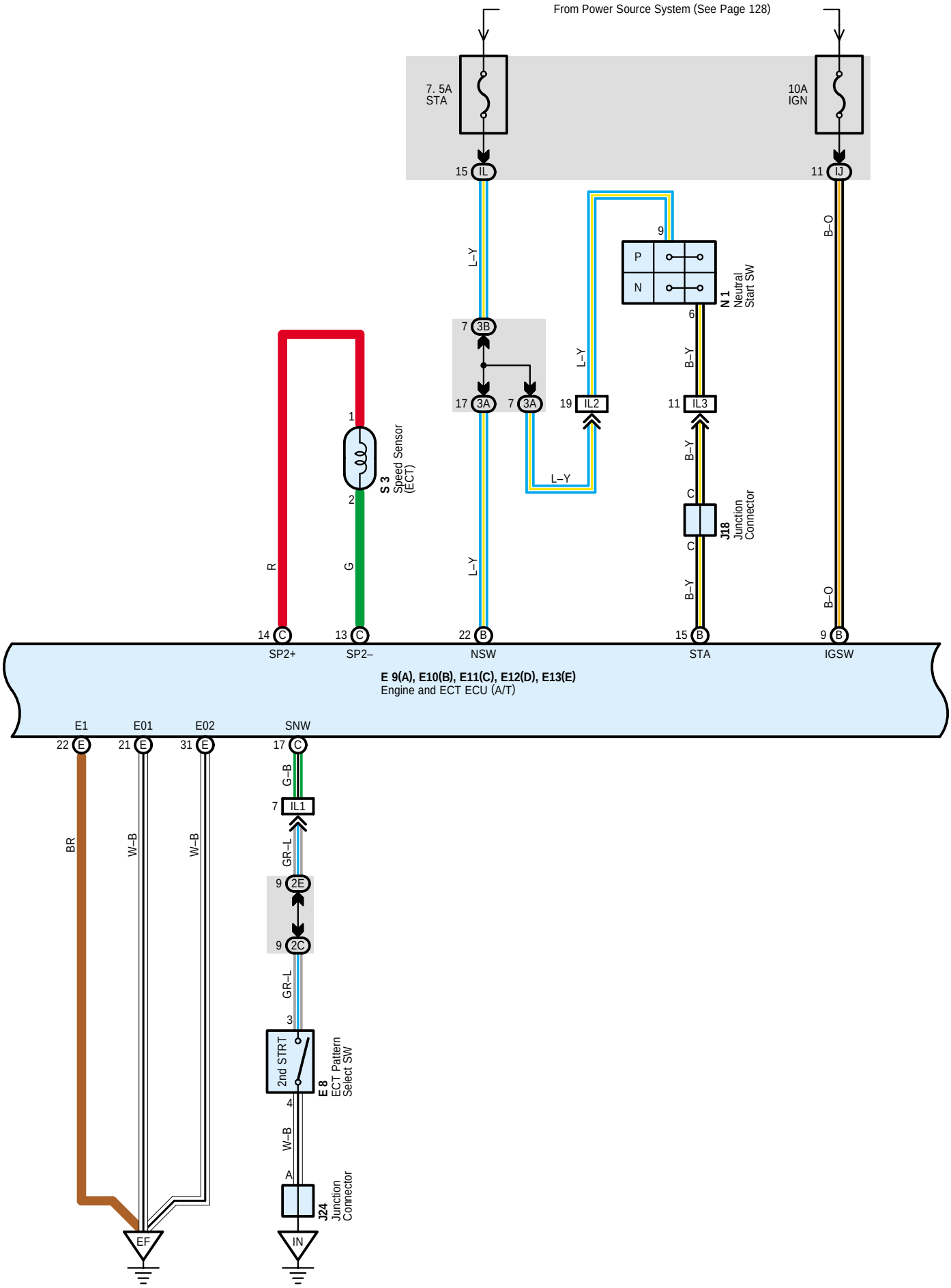

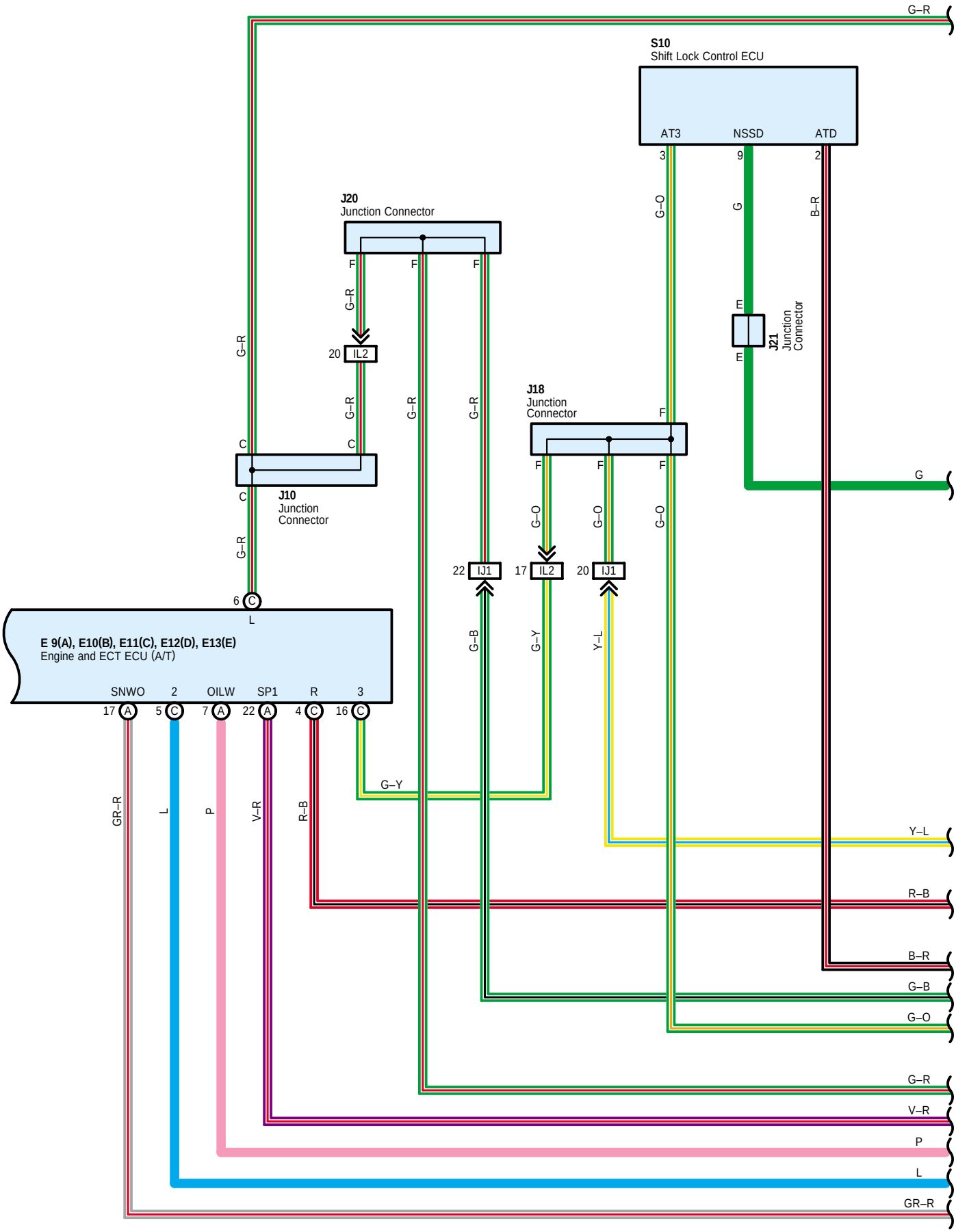
S10
Shift Lock Control ECU
AT3
NSSD
ATD
J20
Junction Connector
J21
Junction Connector
J18
Junction Connector
J10
Junction Connector
E 9(A), E10(B), E11(C), E12(D), E13(E)
Engine and ECT ECU (A/T)
SNWO
OILW
SP1
IL2
IJ1
G–R
G–O
G
B–R
G–B
G–Y
Y–L
R–B
GR–R
L
P
V–R

ECT and A/T Indicator (1KD–FTV)

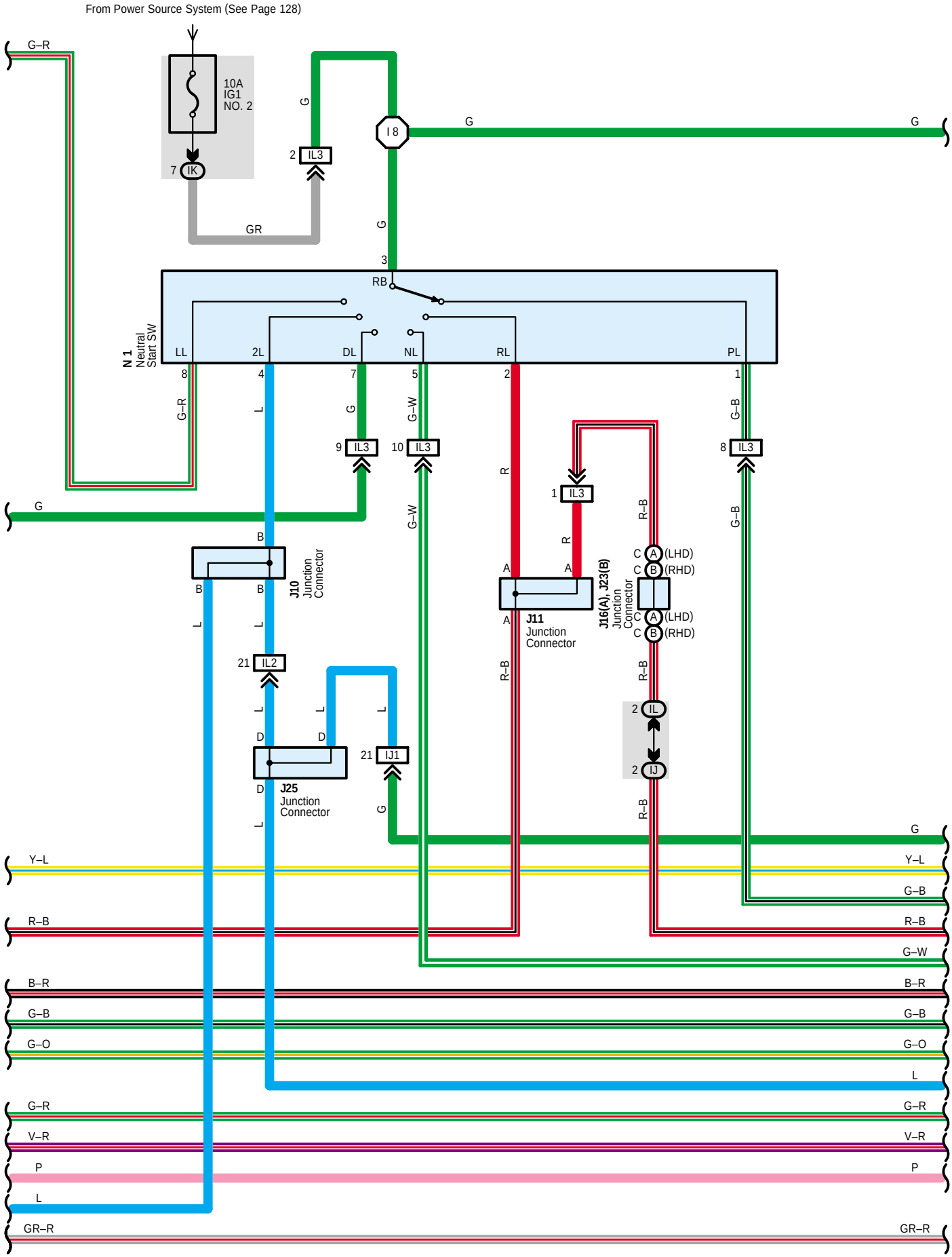

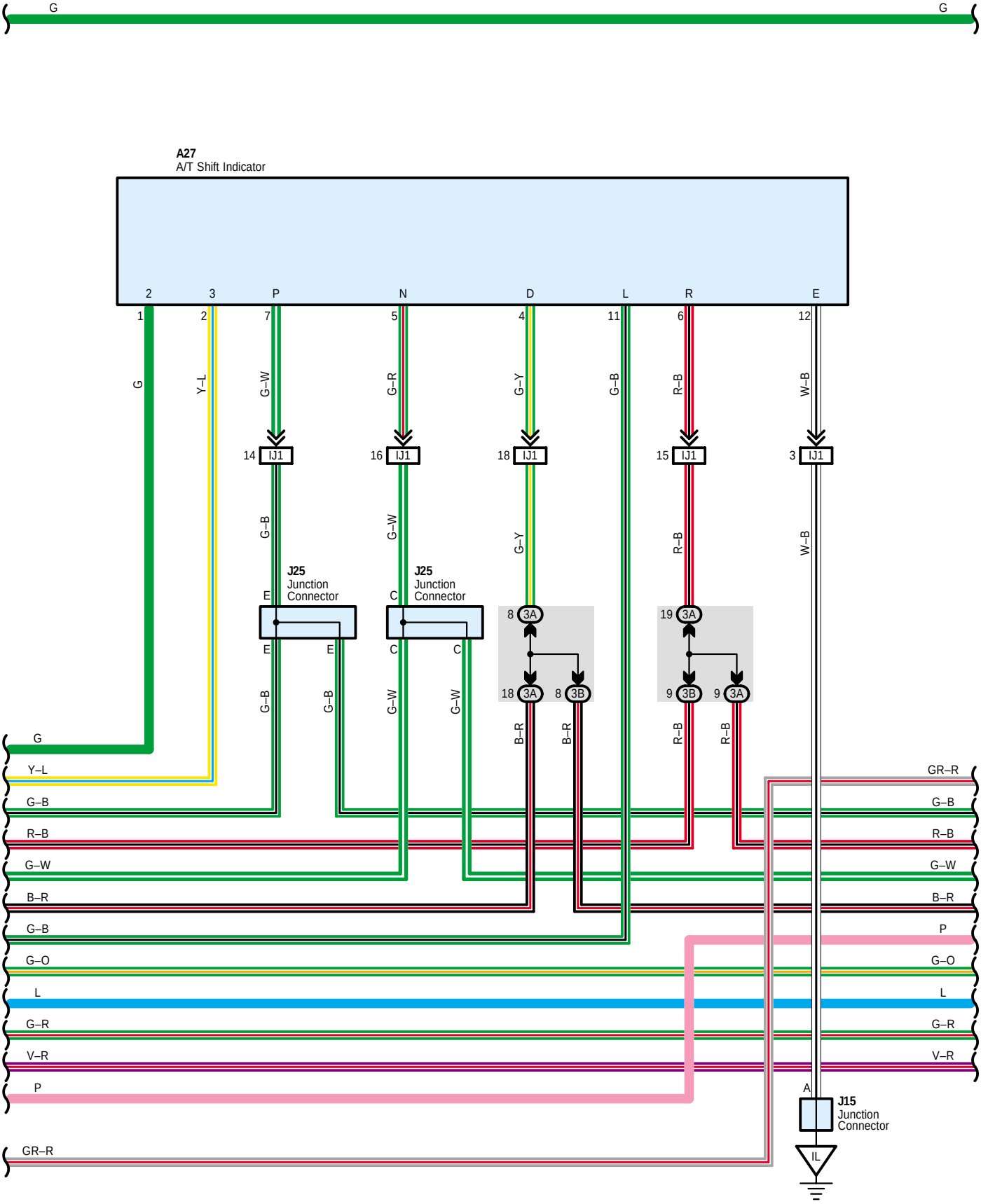
G
G
A27
A/T Shift Indicator
2
3
P
N
D
L
R
E
1
2
7
5
4
11
6
12
G
Y–L
G–W
G–R
G–Y
G–B
R–B
W–B
14
IJ1
16
IJ1
18
IJ1
15
IJ1
3
IJ1
G–B
G–W
G–Y
R–B
W–B
J25
Junction
Connector
E
J25
Junction
Connector
C
8
3A
19
3A
E
E
C
C
18
3A
8
3B
9
3B
9
3A
G–B
G–B
G–W
G–W
B–R
B–R
R–B
R–B
G
Y–L
G–B
R–B
G–W
B–R
G–B
G–O
L
G–R
V–R
P
GR–R
GR–R
G–B
R–B
G–W
B–R
P
G–O
L
G–R
V–R
A
J15
Junction
Connector
IL

ECT and A/T Indicator (1KD-FTV)

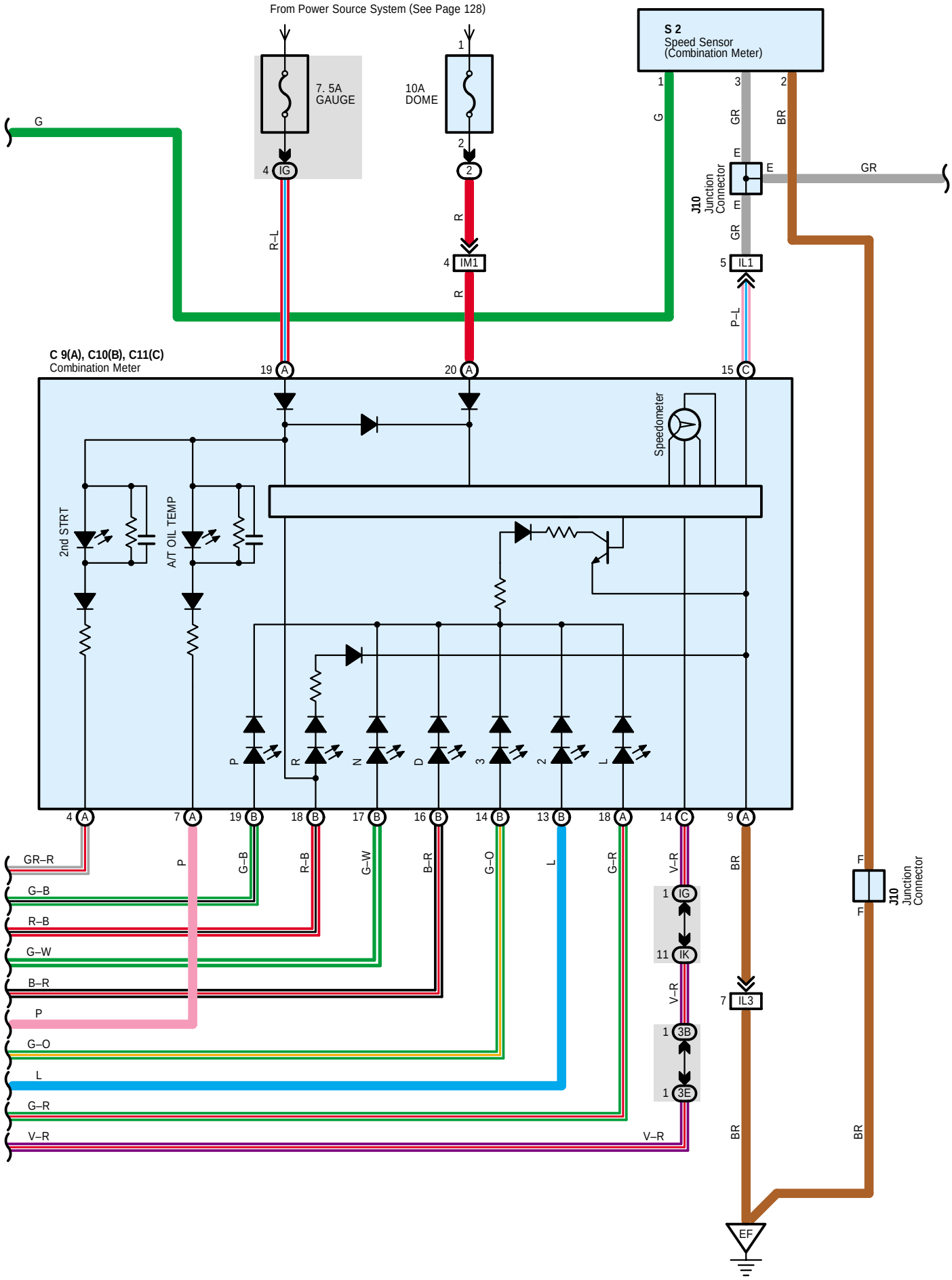

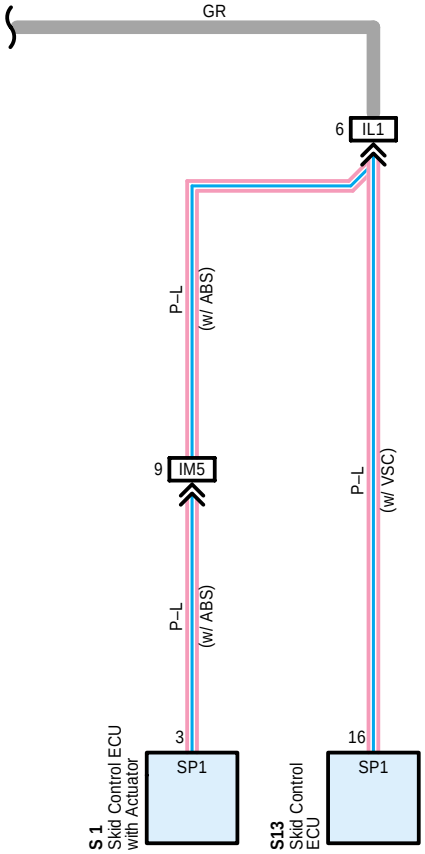
GR
6
IL1
P–L
(w/ ABS)
9
IM5
P–L
(w/ VSC)
P–L
(w/ ABS)
3
SP1
16
SP1
S 1
Skid Control ECU
with Actuator
S13
Skid Control
ECU

System Outline

Previous automatic transmissions have selected each gear shift using mechanically controlled throttle hydraulic pressure, governor hydraulic pressure and lock–up hydraulic pressure. The electronically controlled transmission, however, electrically controls the line pressure, throttle pressure, lock–up pressure and accumulator pressure etc. through the solenoid valve. The electronically controlled transmission is a system which precisely controls gear shift timing and lock–up timing in response to the vehicle's driving conditions and the engine condition detected by various sensors. It makes smooth driving possible by shift selection for each gear which is the most appropriate to the driving conditions at that time, and by preventing downing, squat and gear shift shock when starting off.

1. Gear Shift Operation

When driving, the engine warm up condition is input as a signal to TERMINAL THW of the engine and ECT ECU from the water temp. sensor and the vehicle speed signal from speed sensor is input to TERMINAL SP2+ of the engine and ECT ECU. At the same time, the throttle valve opening signal from the throttle control motor is input to TERMINALS LU+A and LU+B of the engine and ECT ECU as throttle angle signal.
Based on these signals, the engine and ECT ECU selects the best shift position for the driving conditions and sends current to the ECT solenoid.

2. Lock–Up Operation

When the engine and ECT ECU decides based on each signal that the lock–up condition has been met, the current flows through TERMINAL SL of the engine and ECT ECU to TERMINAL 7 of the ECT solenoid to GROUND, causing lock–up operation.

3. Stop Light SW Circuit

If the brake pedal is depressed (Stop light SW on) when driving in lock–up condition, a signal is input to TERMINAL STP of the engine and ECT ECU. The engine and ECT ECU operates and cuts the current to the solenoid to release lock–up.

Service Hints

E9 (A), E10 (B), E13 (E) Engine and ECT ECU

(B) 9–Ground : Approx. 12 volts with the ignition SW at ON position
(B) 2–Ground : Always approx. 12 volts
(B) 22–Ground : Approx. 12 volts with the ignition SW at ST position
(A) 14–Ground : Approx. 12 volts with the brake pedal depressed
(E) 21, (E) 22, (E) 31–Ground : Always continuity

N1 Neutral Start SW

3–1 : Closed with the shift lever in P position
3–2 : Closed with the shift lever in R position
3–5 : Closed with the shift lever in N position
3–7 : Closed with the shift lever in D position or 3 position
3–4 : Closed with the shift lever in 2 position
3–8 : Closed with the shift lever in L position

◯ : Parts Location

Code		See Page
A6		42 (*3)
		62 (*12)
A14		42 (*3)
		62 (*12)
A27		48 (LHD)
		68 (RHD)
A28		48 (LHD)
		68 (RHD)
C9	A	49 (LHD)
		69 (RHD)
C10	B	49 (LHD)
		69 (RHD)
C11	C	49 (LHD)
		69 (RHD)
D6		49 (LHD)
		69 (RHD)
E1		42 (*3)
		62 (*12)
E8		49 (LHD)
		69 (RHD)
E9	A	49 (LHD)
		69 (RHD)
E10	B	49 (LHD)
		69 (RHD)
E11	C	49 (LHD)
		69 (RHD)
E12	D	49 (LHD)

Code		See Page
E12	D	69 (RHD)
E13	E	49 (LHD)
		69 (RHD)
I10		43 (*3)
		63 (*12)
J2		43 (*3)
		63 (*12)
J7		50 (LHD)
		70 (RHD)
J9		50 (LHD)
		70 (RHD)
J10		50 (LHD)
		70 (RHD)
J11		50 (LHD)
		70 (RHD)
J14		50 (LHD)
		70 (RHD)
J15		50 (LHD)
		70 (RHD)
J16	A	50 (LHD)
J17		50 (LHD)
		70 (RHD)
J18		50 (LHD)
		70 (RHD)
J20		50 (LHD)
		70 (RHD)
J21		50 (LHD)

Code		See Page
J21		70 (RHD)
J22		50 (LHD)
		70 (RHD)
J23	B	70 (RHD)
J24		50 (LHD)
		70 (RHD)
J25		50 (LHD)
		70 (RHD)
N1		43 (*3)
		63 (*12)
S1		43 (*3)
		63 (*12)
S2		43 (*3)
		63 (*12)
S3		43 (*3)
		63 (*12)
S10		51 (LHD)
		71 (RHD)
S13		51 (LHD)
		71 (RHD)
S18		51 (LHD)
		71 (RHD)
T2		43 (*3)
		63 (*12)
W3		43 (*3)
		63 (*12)

⬭ : Relay Blocks

Code	See Page	Relay Blocks (Relay Block Location)
2	23	Engine Room R/B (Engine Compartment Left)

* 1 : LHD 1GR-FE * 2 : LHD 3RZ-FE * 3 : LHD 1KD-FTV * 4 : LHD 1KZ-TE * 5 : LHD 5L-E * 6 : LHD 5-Door * 7 : LHD 3-Door
* 8 : LHD 8Way Power Seat * 9 : LHD Except 8Way Power Seat * 10 : RHD 1GR-FE * 11 : RHD 3RZ-FE * 12 : RHD 1KD-FTV
* 13 : RHD 1KZ-TE * 14 : RHD 5L-E * 15 : RHD 5-Door * 16 : RHD 3-Door * 17 : RHD 8Way Power Seat
* 18 : RHD Except 8Way Power Seat

: **Junction Block and Wire Harness Connector**

Code	See Page	Junction Block and Wire Harness (Connector Location)
IG	27 (LHD)	Instrument Panel Wire and Driver Side J/B (Lower Finish Panel)
	29 (RHD)	
IJ	27 (LHD)	
	29 (RHD)	
IK	27 (LHD)	
	29 (RHD)	
IL	27 (LHD)	
	29 (RHD)	
1A	32 (LHD)	Instrument Panel Wire and J/B No.1 (Instrument Panel Reinforcement Left)
	32 (RHD)	Instrument Panel Wire and J/B No.1 (Instrument Panel Reinforcement Right)
1E	32 (LHD)	Instrument Panel Wire and J/B No.1 (Instrument Panel Reinforcement Left)
	32 (RHD)	Instrument Panel Wire and J/B No.1 (Instrument Panel Reinforcement Right)
2C	34	Instrument Panel Wire and J/B No.2 (Instrument Panel Reinforcement Center)
2E		
3A	36 (LHD)	Instrument Panel Wire and J/B No.3 (Instrument Panel Reinforcement Right)
	36 (RHD)	Instrument Panel Wire and J/B No.3 (Instrument Panel Reinforcement Left)
3B	36 (LHD)	Instrument Panel Wire and J/B No.3 (Instrument Panel Reinforcement Right)
	36 (RHD)	Instrument Panel Wire and J/B No.3 (Instrument Panel Reinforcement Left)
3E	36 (LHD)	Instrument Panel Wire and J/B No.3 (Instrument Panel Reinforcement Right)
	36 (RHD)	Instrument Panel Wire and J/B No.3 (Instrument Panel Reinforcement Left)

: **Connector Joining Wire Harness and Wire Harness**

Code	See Page	Joining Wire Harness and Wire Harness (Connector Location)
IC4	88 (LHD)	Instrument Panel Wire and Engine Room Main Wire (Left Kick Panel)
	112 (RHD)	
IJ1	92 (LHD)	Instrument Panel Wire and Switch Wire (Front Side of the Console Box)
	116 (RHD)	
IL1	92 (LHD)	Engine Wire and Instrument Panel Wire (Right Side of the Blower Unit)
	116 (RHD)	Engine Wire and Instrument Panel Wire (Left Side of the Blower Unit)
IL2	92 (LHD)	Engine Wire and Instrument Panel Wire (Right Side of the Blower Unit)
	116 (RHD)	Engine Wire and Instrument Panel Wire (Left Side of the Blower Unit)
IL3	92 (LHD)	Engine Wire and Instrument Panel Wire (Right Side of the Blower Unit)
	116 (RHD)	Engine Wire and Instrument Panel Wire (Left Side of the Blower Unit)
IM1	92 (LHD)	Instrument Panel Wire and Engine Room Main Wire (Right Kick Panel)
	116 (RHD)	
IM4	92 (LHD)	
IM5	92 (LHD)	
	116 (RHD)	

: **Ground Points**

Code	See Page	Ground Points Location
EB	82 (*3)	Front Left Fender
	106 (*12)	
EF	82 (*3)	Rear Part of Cylinder Block
	106 (*12)	
IL	88 (LHD)	Near the Right Side of Steering Column
	112 (RHD)	Instrument Panel Brace RH
IN	88 (LHD)	Right Kick Panel
	112 (RHD)	Left Kick Panel

* 1 : LHD 1GR-FE * 2 : LHD 3RZ-FE * 3 : LHD 1KD-FTV * 4 : LHD 1KZ-TE * 5 : LHD 5L-E * 6 : LHD 5-Door * 7 : LHD 3-Door
* 8 : LHD 8Way Power Seat * 9 : LHD Except 8Way Power Seat * 10 : RHD 1GR-FE * 11 : RHD 3RZ-FE * 12 : RHD 1KD-FTV
* 13 : RHD 1KZ-TE * 14 : RHD 5L-E * 15 : RHD 5-Door * 16 : RHD 3-Door * 17 : RHD 8Way Power Seat
* 18 : RHD Except 8Way Power Seat

: **Splice Points**

Code	See Page	Wire Harness with Splice Points	Code	See Page	Wire Harness with Splice Points
E6	82 (*3)	Engine Wire	I8	90 (LHD)	Engine Wire
	106 (*12)			114 (RHD)	

* 1 : LHD 1GR-FE * 2 : LHD 3RZ-FE * 3 : LHD 1KD-FTV * 4 : LHD 1KZ-TE * 5 : LHD 5L-E * 6 : LHD 5-Door * 7 : LHD 3-Door
* 8 : LHD 8Way Power Seat * 9 : LHD Except 8Way Power Seat * 10 : RHD 1GR-FE * 11 : RHD 3RZ-FE * 12 : RHD 1KD-FTV
* 13 : RHD 1KZ-TE * 14 : RHD 5L-E * 15 : RHD 5-Door * 16 : RHD 3-Door * 17 : RHD 8Way Power Seat
* 18 : RHD Except 8Way Power Seat

ECT and A/T Indicator (1KZ–TE)

From Power Source System (See Page 128)

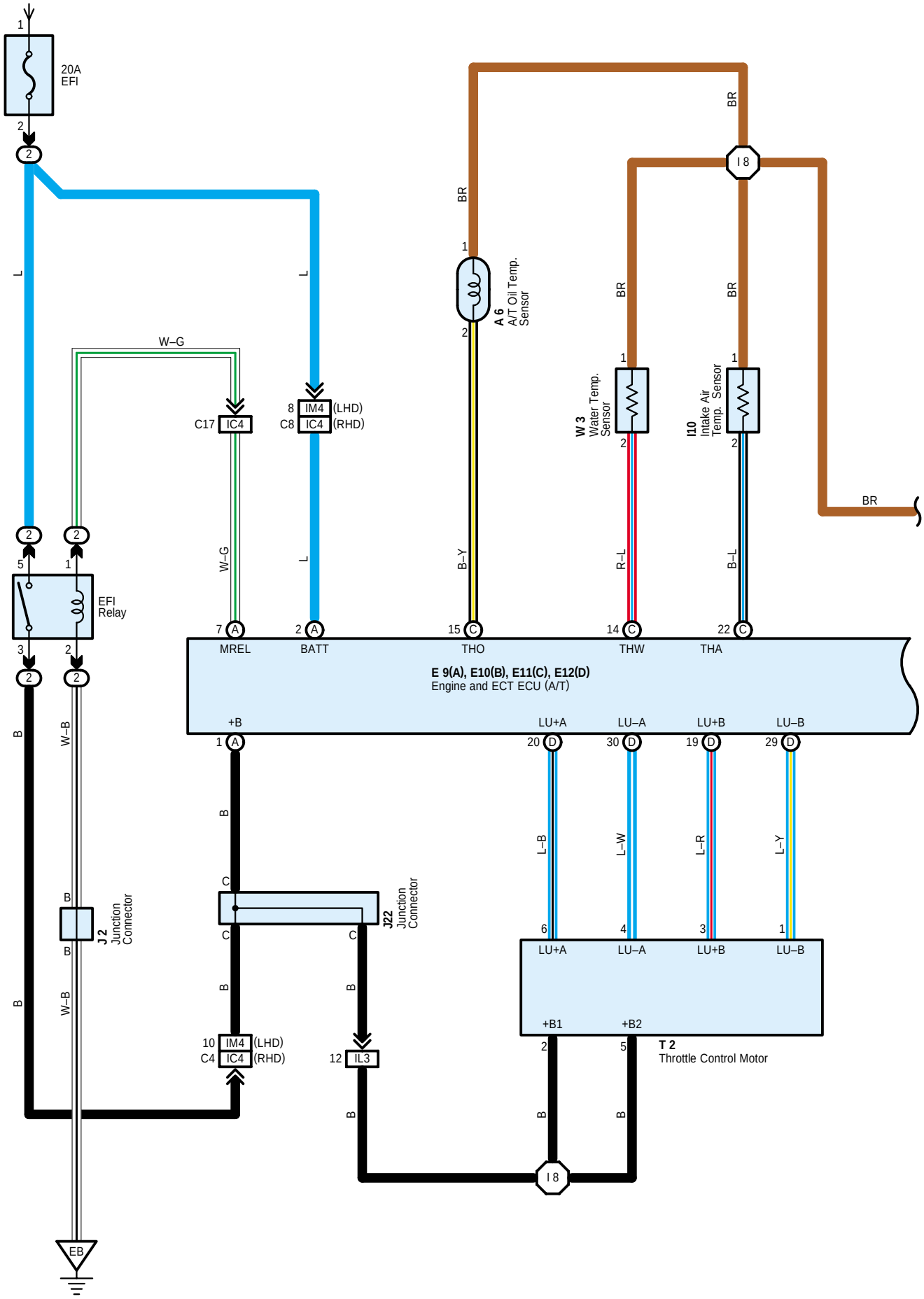

From Power Source System (See Page 128)

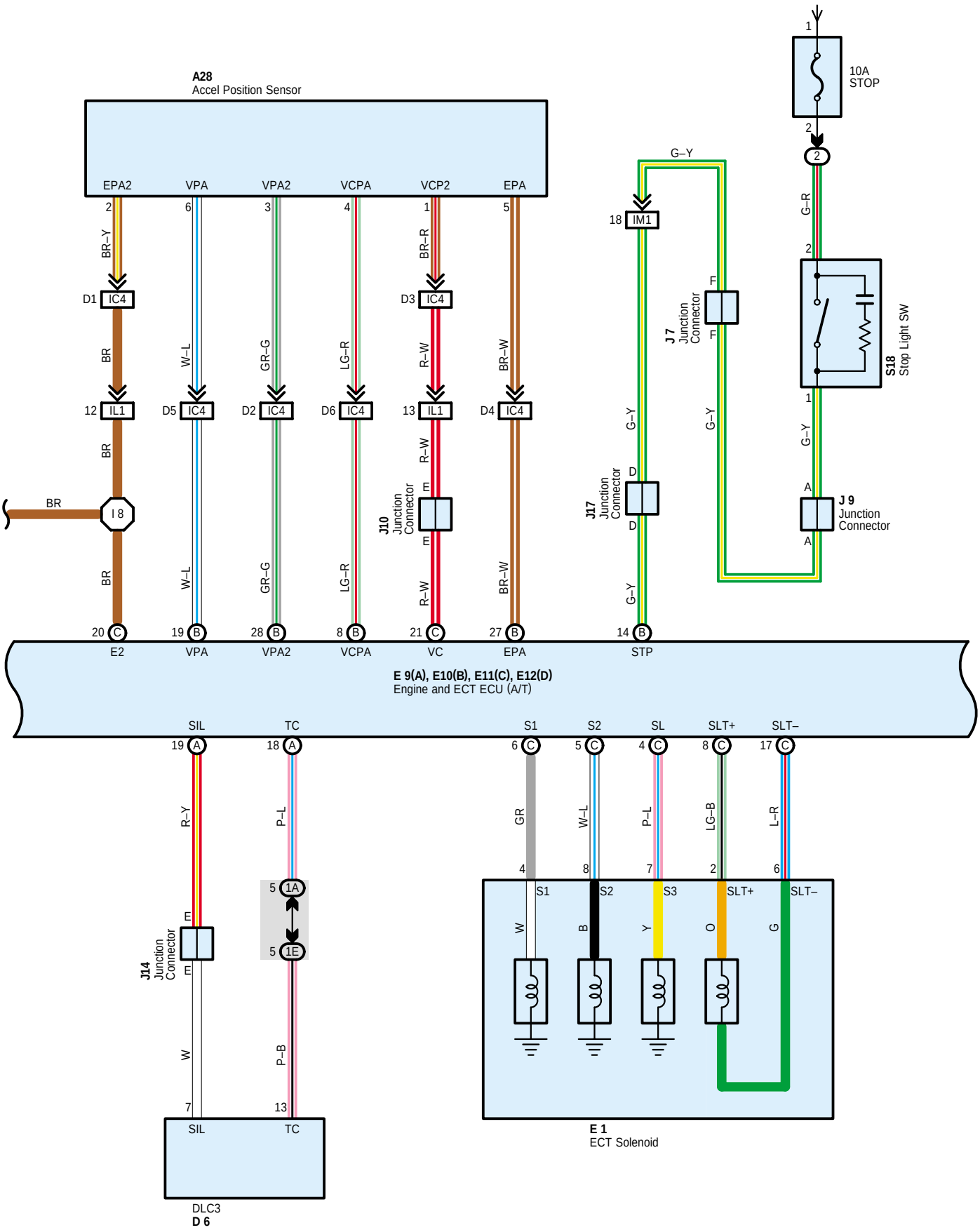

ECT and A/T Indicator (1KZ–TE)

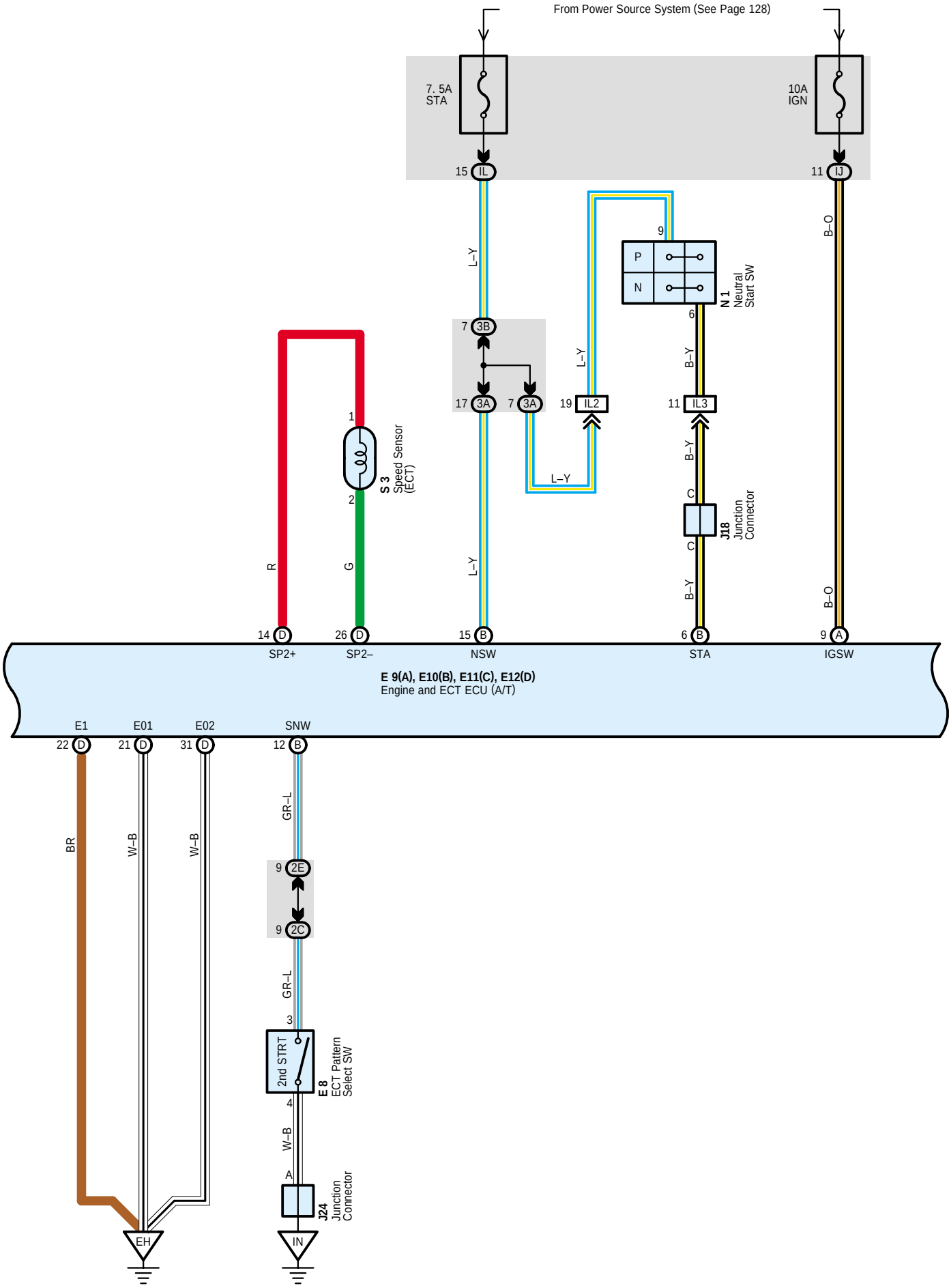

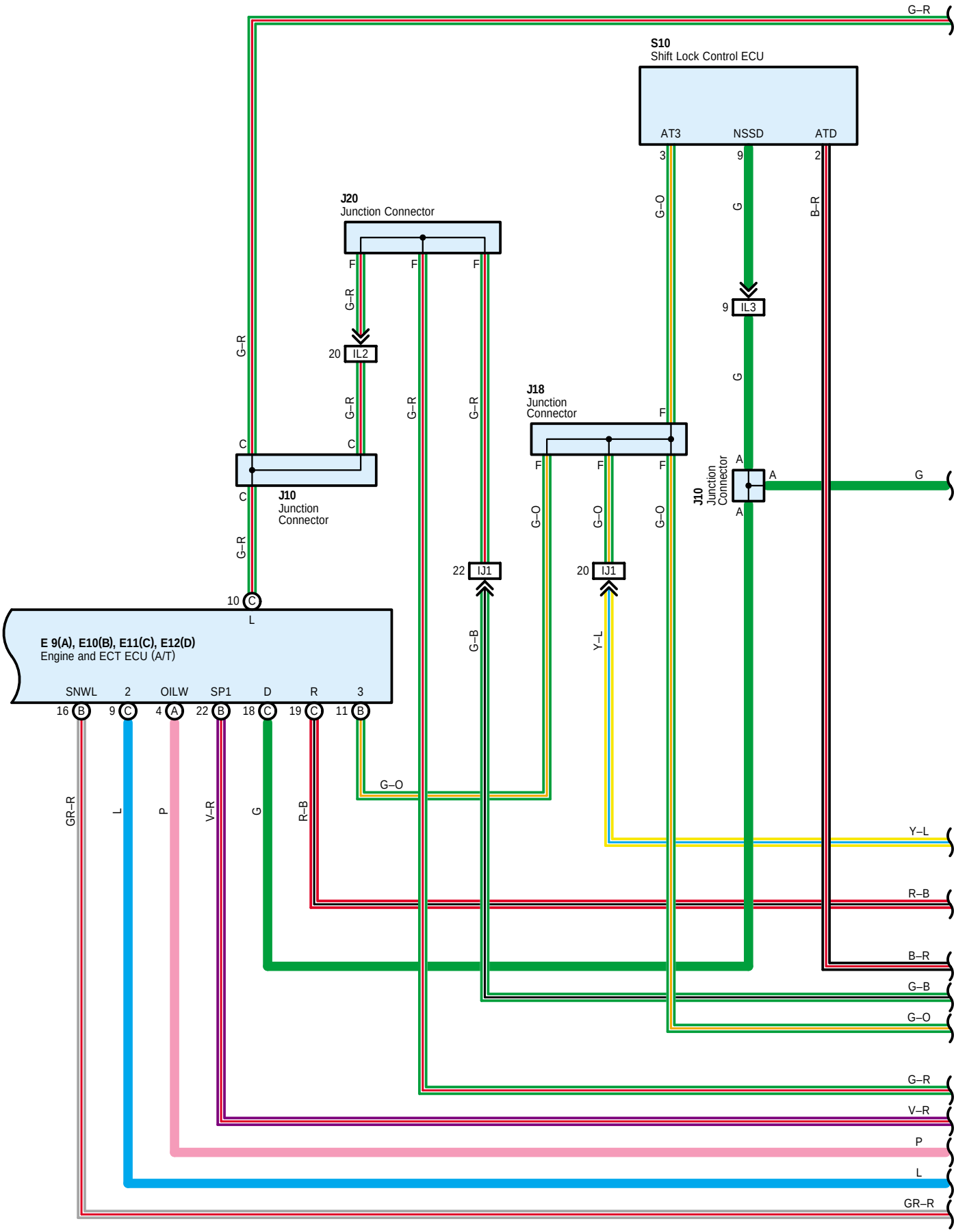
S10
Shift Lock Control ECU
AT3
NSSD
ATD
J20
Junction Connector
IL2
IL3
J18
Junction Connector
J10
Junction Connector
IJ1
E 9(A), E10(B), E11(C), E12(D)
Engine and ECT ECU (A/T)
SNWL
OILW
SP1
G–R
G–O
G
B–R
G–B
Y–L
R–B
GR–R
L
P
V–R

ECT and A/T Indicator (1KZ–TE)

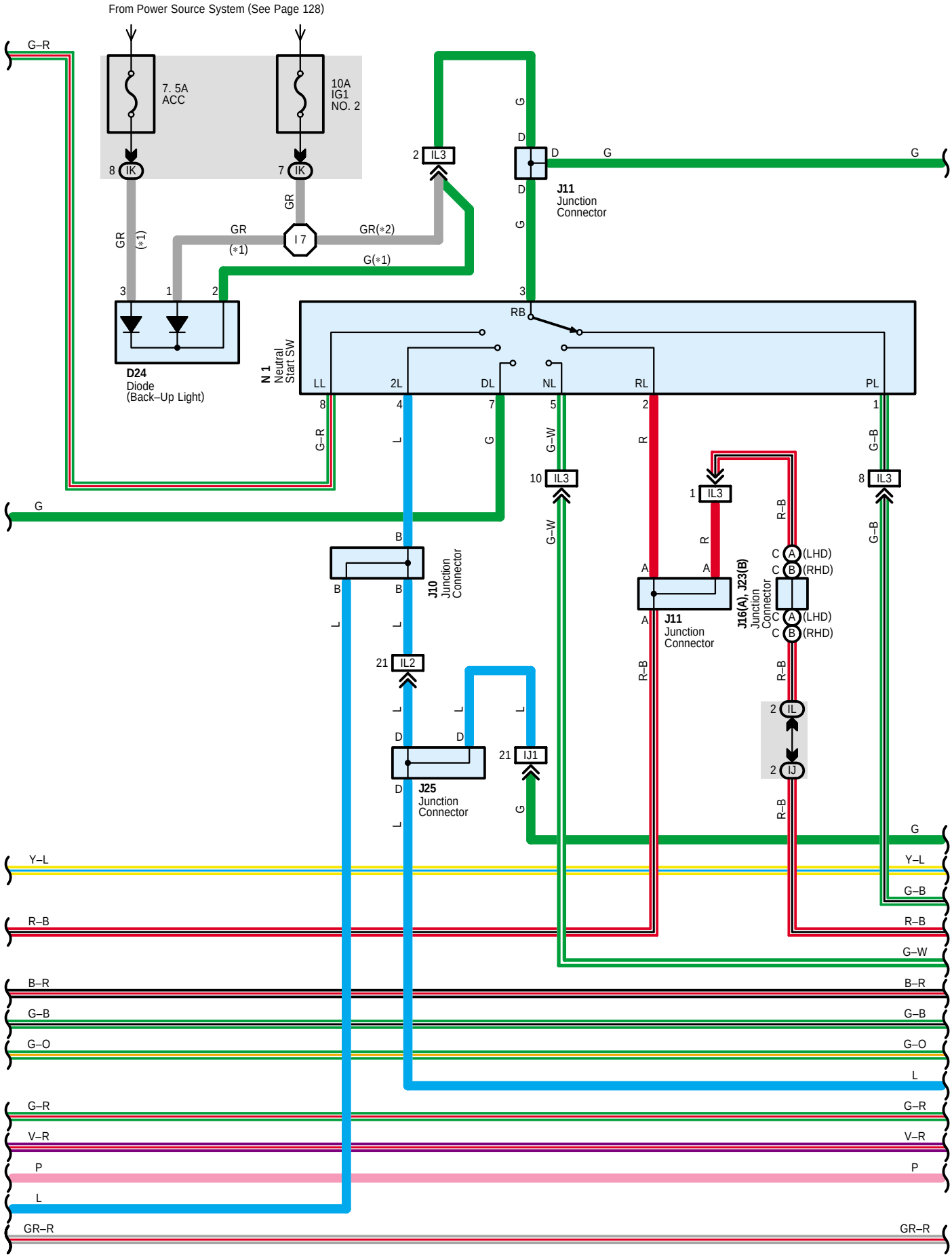

∗ 1 : Australia
∗ 2 : Except Australia

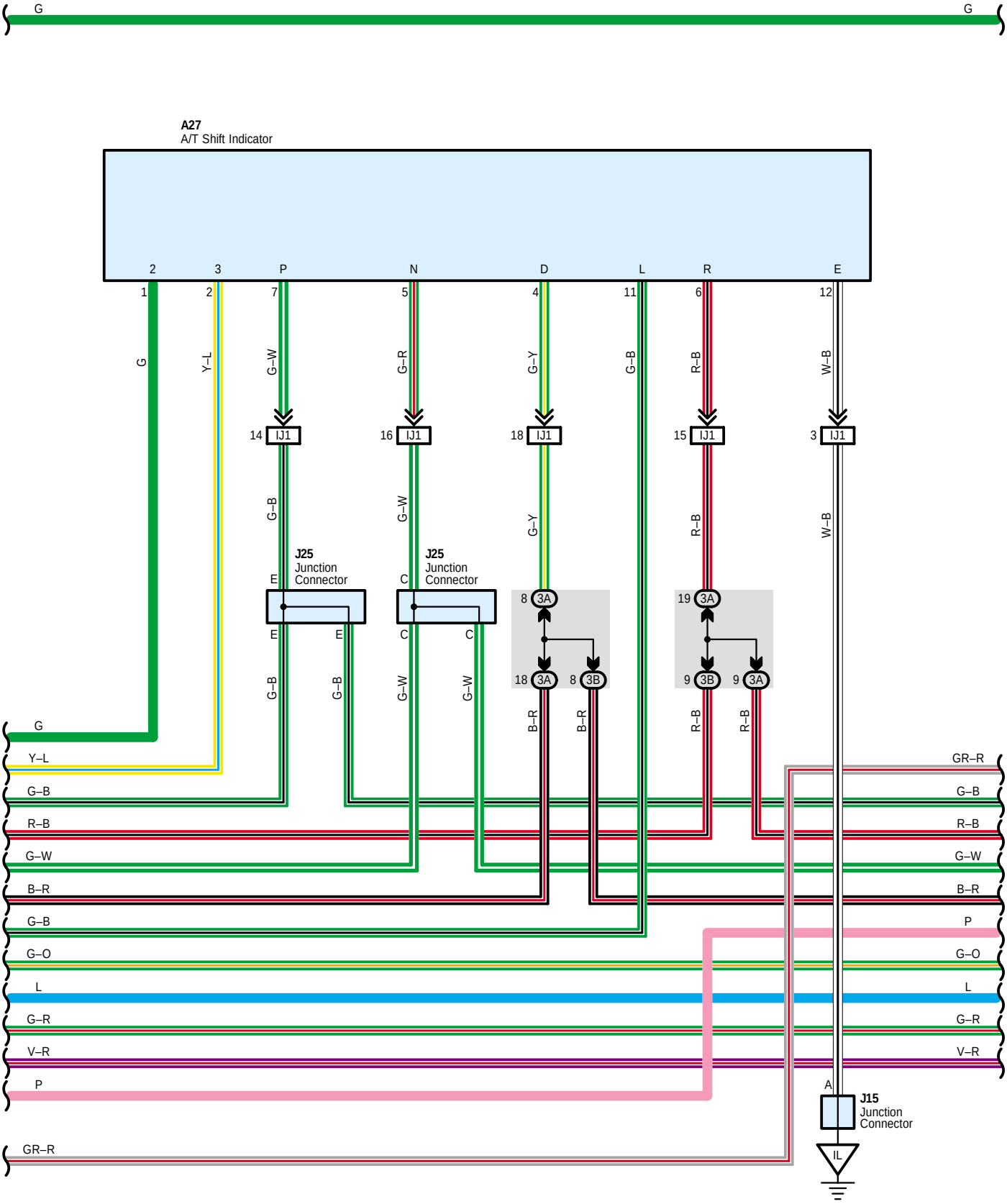

ECT and A/T Indicator (1KZ–TE)

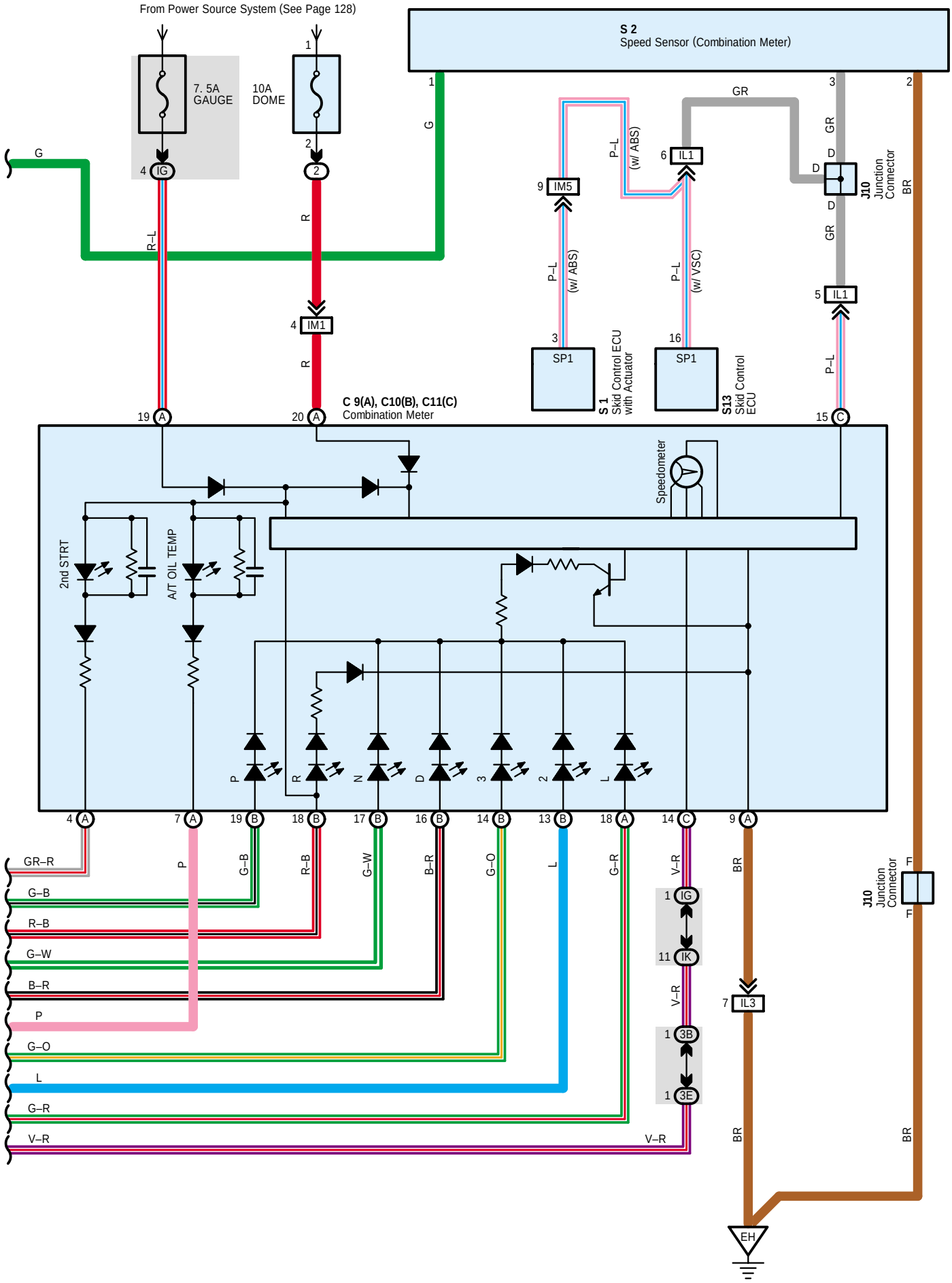

System Outline

Previous automatic transmissions have selected each gear shift using mechanically controlled throttle hydraulic pressure, governor hydraulic pressure and lock-up hydraulic pressure. The electronically controlled transmission, however, electrically controls the line pressure, throttle pressure, lock-up pressure and accumulator pressure etc. through the solenoid valve. The electronically controlled transmission is a system which precisely controls gear shift timing and lock-up timing in response to the vehicle's driving conditions and the engine condition detected by various sensors. It makes smooth driving possible by shift selection for each gear which is the most appropriate to the driving conditions at that time, and by preventing downing, squat and gear shift shock when starting off.

1. Gear Shift Operation

When driving, the engine warm up condition is input as a signal to TERMINAL THW of the engine and ECT ECU from the water temp. sensor and the vehicle speed signal from speed sensor is input to TERMINAL SP2+ of the engine and ECT ECU. At the same time, the throttle valve opening signal from the throttle control motor is input to TERMINALS LU+A and LU+B of the engine and ECT ECU as throttle angle signal.
Based on these signals, the engine and ECT ECU selects the best shift position for the driving conditions and sends current to the ECT solenoid.

2. Lock-Up Operation

When the engine and ECT ECU decides based on each signal that the lock-up condition has been met, the current flows through TERMINAL SL of the engine and ECT ECU to TERMINAL 7 of the ECT solenoid to GROUND, causing lock-up operation.

3. Stop Light SW Circuit

If the brake pedal is depressed (Stop light SW on) when driving in lock-up condition, a signal is input to TERMINAL STP of the engine and ECT ECU. The engine and ECT ECU operates and cuts the current to the solenoid to release lock-up.

Service Hints

E9 (A), E10 (B), E12 (D) Engine and ECT ECU

(A) 9-Ground : Approx. 12 volts with the ignition SW at ON position
(A) 2-Ground : Always approx. 12 volts
(B) 15-Ground : Approx. 12 volts with the ignition SW at ST position
(B) 14-Ground : Approx. 12 volts with the brake pedal depressed
(D)21, (D) 22, (D) 31-Ground : Always continuity

N1 Neutral Start SW

3-1 : Closed with the shift lever in P position
3-2 : Closed with the shift lever in R position
3-5 : Closed with the shift lever in N position
3-7 : Closed with the shift lever in D position or 3 position
3-4 : Closed with the shift lever in 2 position
3-8 : Closed with the shift lever in L position

○ : **Parts Location**

Code		See Page	Code		See Page	Code		See Page
A6		44 (*4)	E12	D	49 (LHD)	J22		50 (LHD)
		64 (*13)			69 (RHD)			70 (RHD)
A27		48 (LHD)	I10		45 (*4)	J23	B	70 (RHD)
		68 (RHD)			65 (*13)	J24		50 (LHD)
A28		48 (LHD)	J2		45 (*4)			70 (RHD)
		68 (RHD)			65 (*13)	J25		50 (LHD)
C9	A	49 (LHD)	J7		50 (LHD)			70 (RHD)
		69 (RHD)			70 (RHD)	N1		45 (*4)
C10	B	49 (LHD)	J9		50 (LHD)			65 (*13)
		69 (RHD)			70 (RHD)	S1		45 (*4)
C11	C	49 (LHD)	J10		50 (LHD)			65 (*13)
		69 (RHD)			70 (RHD)	S2		45 (*4)
D6		49 (LHD)	J11		50 (LHD)			65 (*13)
		69 (RHD)			70 (RHD)	S3		45 (*4)
D24		69 (RHD)	J14		50 (LHD)			65 (*13)
E1		44 (*4)			70 (RHD)	S10		51 (LHD)
		64 (*13)	J15		50 (LHD)			71 (RHD)
E8		49 (LHD)			70 (RHD)	S13		51 (LHD)
		69 (RHD)	J16	A	50 (LHD)			71 (RHD)
E9	A	49 (LHD)	J17		50 (LHD)	S18		51 (LHD)
		69 (RHD)			70 (RHD)			71 (RHD)
E10	B	49 (LHD)	J18		50 (LHD)	T2		45 (*4)
		69 (RHD)			70 (RHD)			65 (*13)
E11	C	49 (LHD)	J20		50 (LHD)	W3		45 (*4)
		69 (RHD)			70 (RHD)			65 (*13)

⬭ : **Relay Blocks**

Code	See Page	Relay Blocks (Relay Block Location)
2	23	Engine Room R/B (Engine Compartment Left)

* 1 : LHD 1GR–FE * 2 : LHD 3RZ–FE * 3 : LHD 1KD–FTV * 4 : LHD 1KZ–TE * 5 : LHD 5L–E * 6 : LHD 5–Door * 7 : LHD 3–Door
* 8 : LHD 8Way Power Seat * 9 : LHD Except 8Way Power Seat * 10 : RHD 1GR–FE * 11 : RHD 3RZ–FE * 12 : RHD 1KD–FTV
* 13 : RHD 1KZ–TE * 14 : RHD 5L–E * 15 : RHD 5–Door * 16 : RHD 3–Door * 17 : RHD 8Way Power Seat
* 18 : RHD Except 8Way Power Seat

: **Junction Block and Wire Harness Connector**

Code	See Page	Junction Block and Wire Harness (Connector Location)
IG	27 (LHD)	Instrument Panel Wire and Driver Side J/B (Lower Finish Panel)
	29 (RHD)	
IJ	27 (LHD)	
	29 (RHD)	
IK	27 (LHD)	
	29 (RHD)	
IL	27 (LHD)	
	29 (RHD)	
1A	32 (LHD)	Instrument Panel Wire and J/B No.1 (Instrument Panel Reinforcement Left)
	32 (RHD)	Instrument Panel Wire and J/B No.1 (Instrument Panel Reinforcement Right)
1E	32 (LHD)	Instrument Panel Wire and J/B No.1 (Instrument Panel Reinforcement Left)
	32 (RHD)	Instrument Panel Wire and J/B No.1 (Instrument Panel Reinforcement Right)
2C	34	Instrument Panel Wire and J/B No.2 (Instrument Panel Reinforcement Center)
2E		
3A	36 (LHD)	Instrument Panel Wire and J/B No.3 (Instrument Panel Reinforcement Right)
	36 (RHD)	Instrument Panel Wire and J/B No.3 (Instrument Panel Reinforcement Left)
3B	36 (LHD)	Instrument Panel Wire and J/B No.3 (Instrument Panel Reinforcement Right)
	36 (RHD)	Instrument Panel Wire and J/B No.3 (Instrument Panel Reinforcement Left)
3E	36 (LHD)	Instrument Panel Wire and J/B No.3 (Instrument Panel Reinforcement Right)
	36 (RHD)	Instrument Panel Wire and J/B No.3 (Instrument Panel Reinforcement Left)

: **Connector Joining Wire Harness and Wire Harness**

Code	See Page	Joining Wire Harness and Wire Harness (Connector Location)
IC4	88 (LHD)	Instrument Panel Wire and Engine Room Main Wire (Left Kick Panel)
	112 (RHD)	
IJ1	92 (LHD)	Instrument Panel Wire and Switch Wire (Front Side of the Console Box)
	116 (RHD)	
IL1	92 (LHD)	Engine Wire and Instrument Panel Wire (Right Side of the Blower Unit)
	116 (RHD)	Engine Wire and Instrument Panel Wire (Left Side of the Blower Unit)
IL2	92 (LHD)	Engine Wire and Instrument Panel Wire (Right Side of the Blower Unit)
	116 (RHD)	Engine Wire and Instrument Panel Wire (Left Side of the Blower Unit)
IL3	92 (LHD)	Engine Wire and Instrument Panel Wire (Right Side of the Blower Unit)
	116 (RHD)	Engine Wire and Instrument Panel Wire (Left Side of the Blower Unit)
IM1	92 (LHD)	Instrument Panel Wire and Engine Room Main Wire (Right Kick Panel)
	116 (RHD)	
IM4	92 (LHD)	
IM5	92 (LHD)	
	116 (RHD)	

: **Ground Points**

Code	See Page	Ground Points Location
EB	84 (*4)	Front Left Fender
	108 (*13)	
EH	84 (*4)	Rear Part of Cylinder Block
	108 (*13)	
IL	88 (LHD)	Near the Right Side of Steering Column
	112 (RHD)	Instrument Panel Brace RH
IN	88 (LHD)	Right Kick Panel
	112 (RHD)	Left Kick Panel

* 1 : LHD 1GR-FE * 2 : LHD 3RZ-FE * 3 : LHD 1KD-FTV * 4 : LHD 1KZ-TE * 5 : LHD 5L-E * 6 : LHD 5-Door * 7 : LHD 3-Door
* 8 : LHD 8Way Power Seat * 9 : LHD Except 8Way Power Seat * 10 : RHD 1GR-FE * 11 : RHD 3RZ-FE * 12 : RHD 1KD-FTV
* 13 : RHD 1KZ-TE * 14 : RHD 5L-E * 15 : RHD 5-Door * 16 : RHD 3-Door * 17 : RHD 8Way Power Seat
* 18 : RHD Except 8Way Power Seat

: **Splice Points**

Code	See Page	Wire Harness with Splice Points	Code	See Page	Wire Harness with Splice Points
I7	90 (LHD) 114 (RHD)	Instrument Panel Wire	I8	90 (LHD) 114 (RHD)	Engine Wire

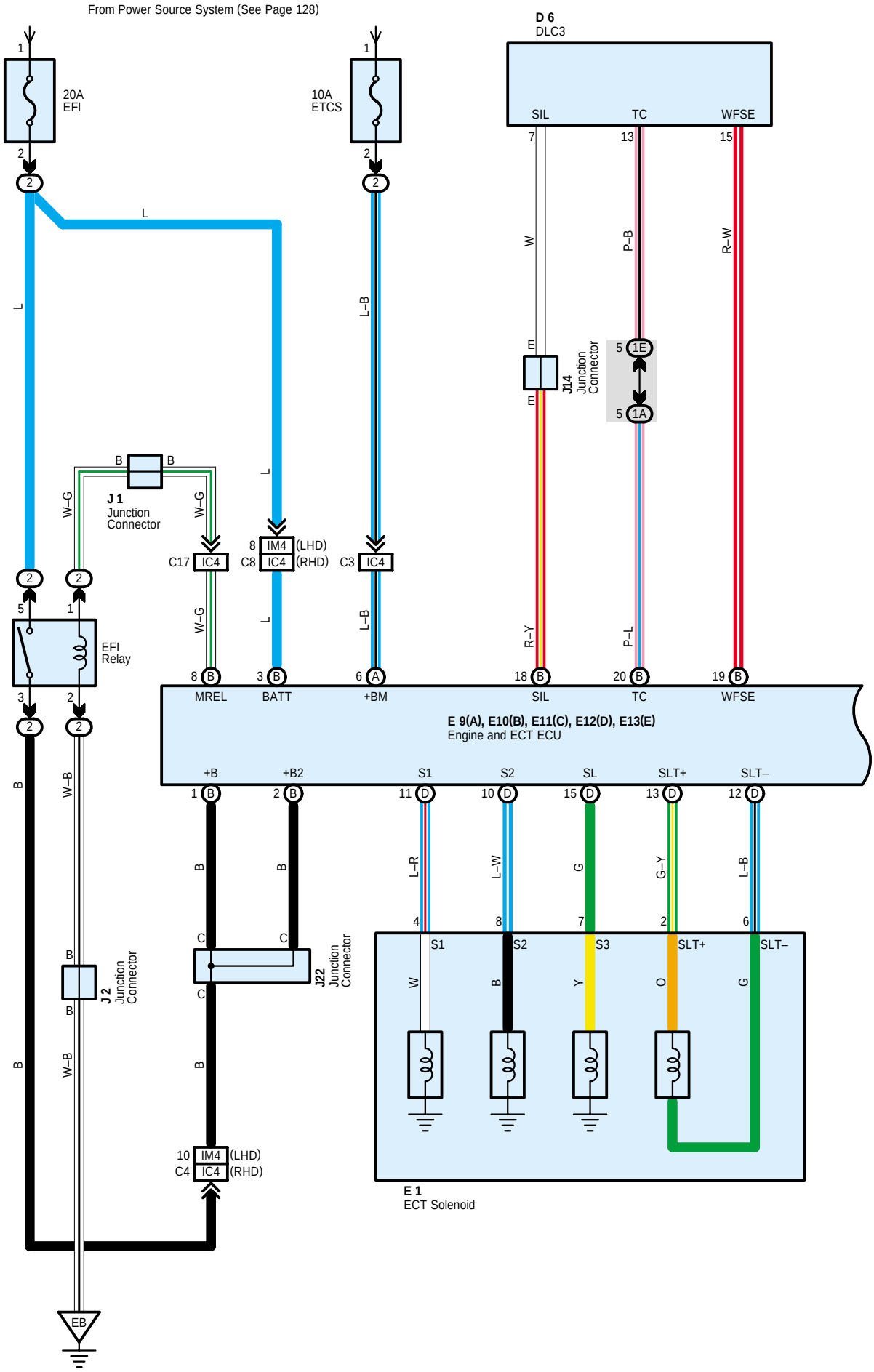
From Power Source System (See Page 128)
20A
EFI
10A
ETCS
D 6
DLC3
SIL
TC
WFSE
J14
Junction
Connector
J 1
Junction
Connector
IM4
IC4
(LHD)
(RHD)
C17
C8
C3
EFI
Relay
MREL
BATT
+BM
SIL
TC
WFSE
E 9(A), E10(B), E11(C), E12(D), E13(E)
Engine and ECT ECU
+B
+B2
S1
S2
SL
SLT+
SLT–
J2
Junction
Connector
J22
Junction
Connector
C4
E 1
ECT Solenoid
EB

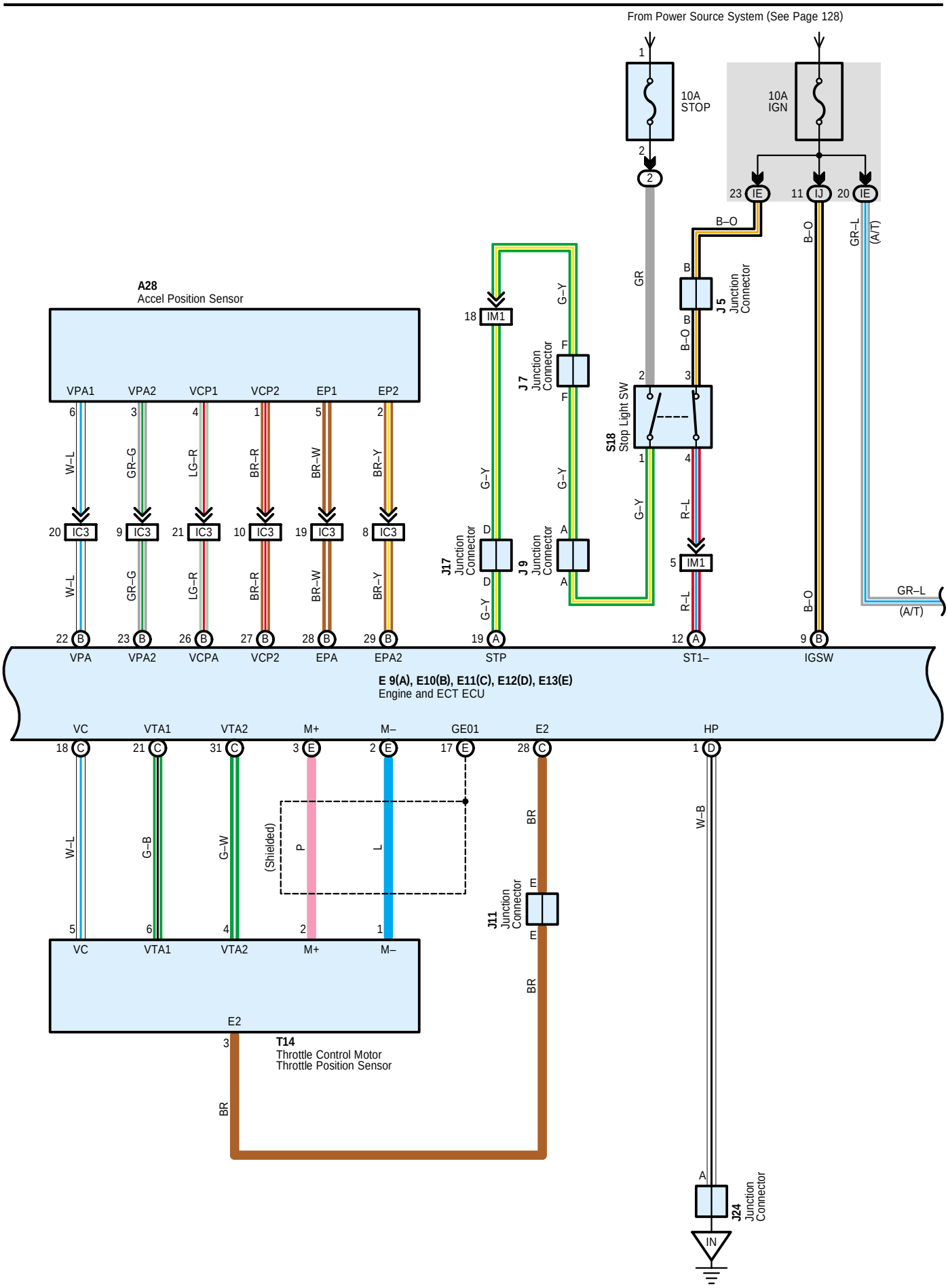
From Power Source System (See Page 128)
10A STOP
10A IGN
A28
Accel Position Sensor
VPA1
VPA2
VCP1
VCP2
EP1
EP2
IC3
IM1
J7 Junction Connector
J5 Junction Connector
S18 Stop Light SW
J17 Junction Connector
J9 Junction Connector
VPA
VPA2
VCPA
VCP2
EPA
EPA2
STP
ST1–
IGSW
E 9(A), E10(B), E11(C), E12(D), E13(E)
Engine and ECT ECU
VC
VTA1
VTA2
M+
M–
GE01
E2
HP
(Shielded)
J11 Junction Connector
T14
Throttle Control Motor
Throttle Position Sensor
J24 Junction Connector
IN
GR–L
(A/T)

Cruise Control (1GR–FE)

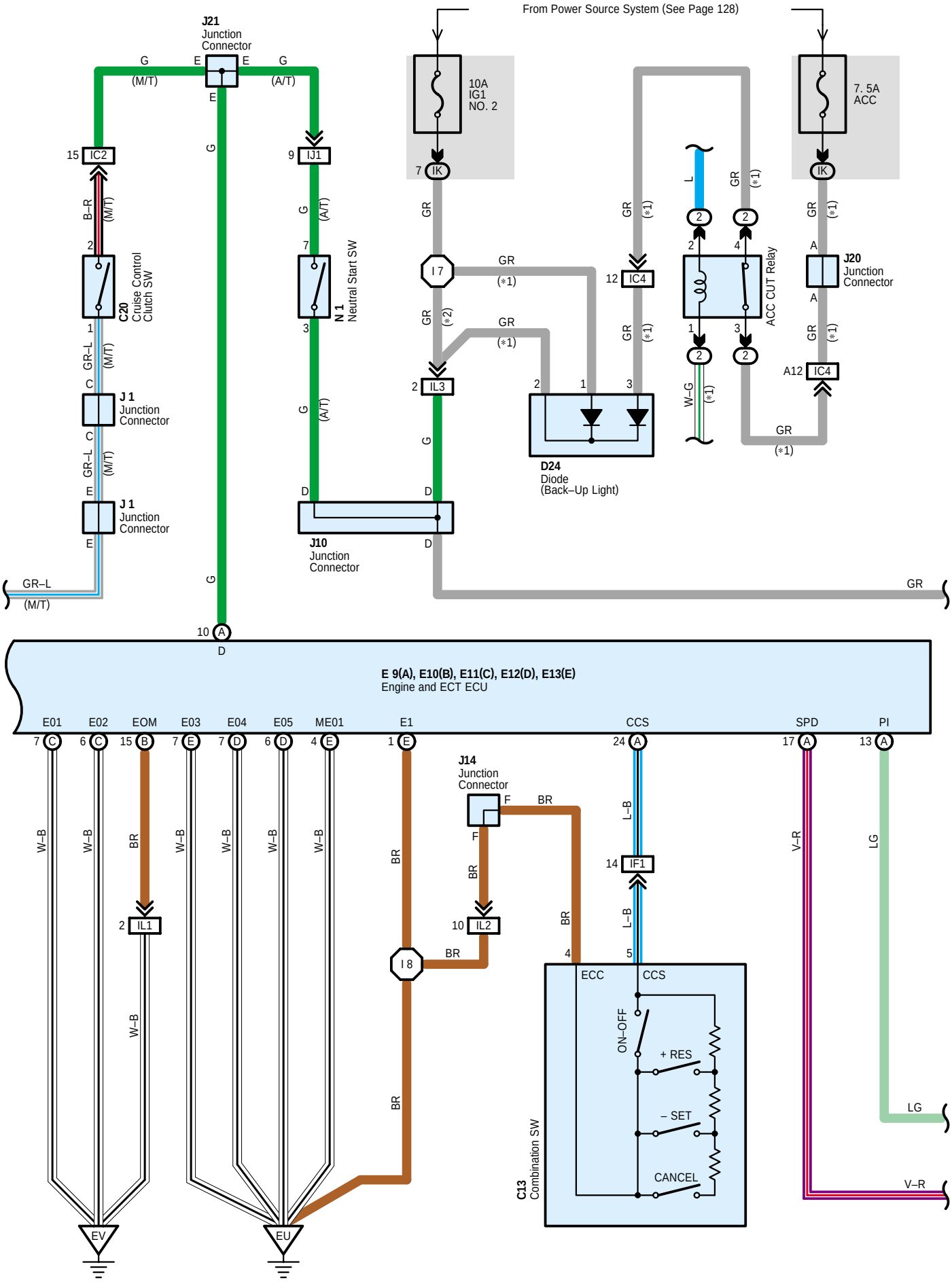

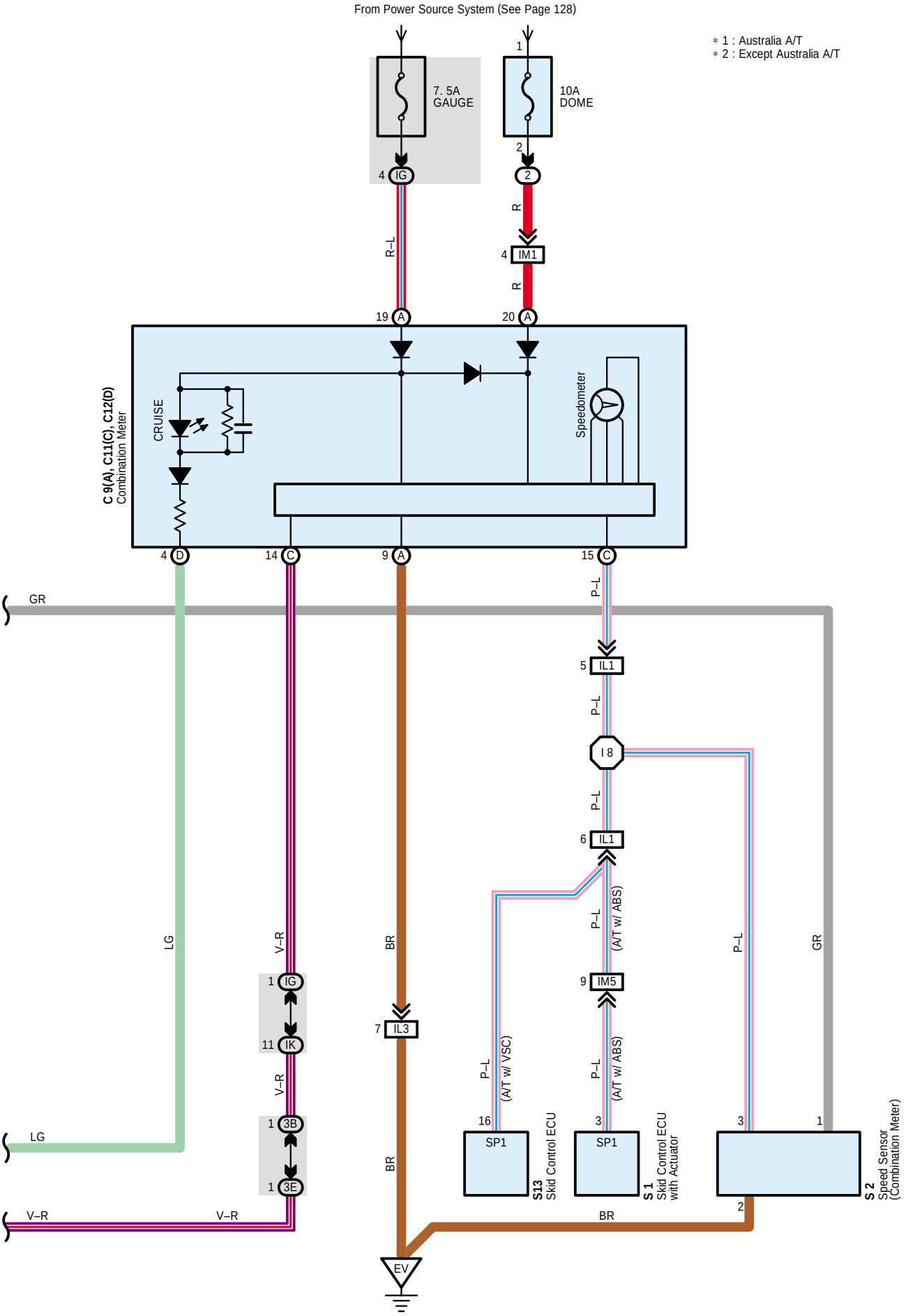
From Power Source System (See Page 128)
* 1 : Australia A/T
* 2 : Except Australia A/T
7. 5A
GAUGE
10A
DOME
IG
IM1
C 9(A), C11(C), C12(D)
Combination Meter
CRUISE
Speedometer
GR
IL1
I 8
IM5
IL3
IK
3B
3E
LG
V–R
BR
P–L
R–L
R
(A/T w/ ABS)
(A/T w/ VSC)
SP1
S13
Skid Control ECU
S 1
Skid Control ECU
with Actuator
S 2
Speed Sensor
(Combination Meter)
EV

System Outline

The cruise control system is a constant vehicle speed controller in which control of the switch on the instrument panel makes it possible to automatically adjust the opening of the engine throttle valve without depressing of the accel pedal.

1. Set Operation

When the ON-OFF SW is turned on, the system starts preparations necessary for the cruise control and turns on the indicator light in the combination meter.

2. Set Speed Control

When the - SET SW is operated with the cruise control main SW turned on during travelling, the constant vehicle speed is controlled.

3. Coast Control

When the - SET SW is kept turned on during cruise control travelling, the engine and ECT ECU (A/T), engine ECU (M/T) controls the throttle valve to decelerate the vehicle. Every time the - SET SW is turned on instantaneously, the vehicle speed is decelerated approximately 1.5 km/h.

4. Accel Control

When the + RES SW is kept turned on during cruise control travelling, the engine and ECT ECU (A/T), engine ECU (M/T) controls the throttle valve to accelerate the vehicle. Every time the + RES SW is turned on instantaneously, the vehicle speed is accelerated approximately 1.5 km/h.

5. Resume Control

When the vehicle speed is within the low speed limit (Approximately 40 km/h, 25 mph) if the cruise control is cancelled, use of the + RES SW accelerates the vehicle to the speed level used before canceling the cruise control.

6. Manual Cancel Mechanism

If any of the following signals is input during cruise control travelling, the cruise control is cancelled.
* The stop light SW is turned on.
* The CANCEL SW is turned on.
* The ON-OFF SW is turned off.

7. Auto Cancel Function

If any of the following conditions is encountered, the cruise control is automatically cancelled.
* The stop light SW wiring is faulty or short-circuited.
* The vehicle speed signal is faulty.
* The electronically controlled throttle malfunctions.

8. Overdrive Control Function

Overdrive is sometimes cut off on gradients during cruise control driving. When end of climbing gradient is determined by throttle opening degree information after overdrive is canceled, control is reset to overdrive condition after overdrive resetting timer operation. Also, when overdrive is cut off during accelerator resuming control, control is reset to overdrive condition when accelerator resuming control is finished.

Service Hints

E9 (A), E10 (B), E11 (C), E12 (D), E13 (E) Engine and ECT ECU (A/T), Engine ECU (M/T)

(B) 9-Ground : Approx. 12 volts with ignition SW at ON position
(A) 6, (B) 3-Ground : Always approx. 12 volts
(D) 6, (D) 7, (C) 6, (C) 7, (D) 1, (E) 4, (E) 7, (E) 1, (B) 15-Ground : Always continuity
(A) 19-Ground : Approx. 12 volts with brake pedal depressed
(A) 24-Ground : Continuity with cruise control ON-OFF SW at on
Approx. 1540 Ω with CANCEL SW on in cruise control SW
Approx. 240 Ω with + RES SW on in cruise control SW
Approx. 630 Ω with - SET SW on in cruise control SW

C13 Combination SW

5-4 : Approx. 1540 Ω with CANCEL SW on
Approx. 240 Ω with + RES SW on
Approx. 630 Ω with - SET SW on

: Parts Location

Code		See Page	Code		See Page	Code	See Page
A28		48 (LHD)	E11	C	69 (RHD)	J17	70 (RHD)
		68 (RHD)	E12	D	49 (LHD)	J20	50 (LHD)
C9	A	49 (LHD)			69 (RHD)		70 (RHD)
		69 (RHD)	E13	E	49 (LHD)	J21	50 (LHD)
C11	C	49 (LHD)			69 (RHD)		70 (RHD)
		69 (RHD)	J1		39 (*1)	J22	50 (LHD)
C12	D	49 (LHD)			59 (*10)		70 (RHD)
		69 (RHD)	J2		39 (*1)	J24	50 (LHD)
C13		49 (LHD)			59 (*10)		70 (RHD)
		69 (RHD)	J5		39 (*1)	N1	39 (*1)
C20		49 (LHD)			59 (*10)		59 (*10)
		69 (RHD)	J7		50 (LHD)	S1	39 (*1)
D6		49 (LHD)			70 (RHD)		59 (*10)
		69 (RHD)	J9		50 (LHD)	S2	39 (*1)
D24		69 (RHD)			70 (RHD)		59 (*10)
E1		38 (*1)	J10		50 (LHD)	S13	51 (LHD)
		58 (*10)			70 (RHD)		71 (RHD)
E9	A	49 (LHD)	J11		50 (LHD)	S18	51 (LHD)
		69 (RHD)			70 (RHD)		71 (RHD)
E10	B	49 (LHD)	J14		50 (LHD)	T14	39 (*1)
		69 (RHD)			70 (RHD)		59 (*10)
E11	C	49 (LHD)	J17		50 (LHD)		

: Relay Blocks

Code	See Page	Relay Blocks (Relay Block Location)
2	23	Engine Room R/B (Engine Compartment Left)

: Junction Block and Wire Harness Connector

Code	See Page	Junction Block and Wire Harness (Connector Location)
IE	26 (LHD)	Engine Room Main Wire and Driver Side J/B (Lower Finish Panel)
	28 (RHD)	
IG	27 (LHD)	Instrument Panel Wire and Driver Side J/B (Lower Finish Panel)
	29 (RHD)	
IJ	27 (LHD)	
	29 (RHD)	
IK	27 (LHD)	
	29 (RHD)	
1A	32 (LHD)	Instrument Panel Wire and J/B No.1 (Instrument Panel Reinforcement Left)
	32 (RHD)	Instrument Panel Wire and J/B No.1 (Instrument Panel Reinforcement Right)
1E	32 (LHD)	Instrument Panel Wire and J/B No.1 (Instrument Panel Reinforcement Left)
	32 (RHD)	Instrument Panel Wire and J/B No.1 (Instrument Panel Reinforcement Right)
3B	36 (LHD)	Instrument Panel Wire and J/B No.3 (Instrument Panel Reinforcement Right)
	36 (RHD)	Instrument Panel Wire and J/B No.3 (Instrument Panel Reinforcement Left)
3E	36 (LHD)	Instrument Panel Wire and J/B No.3 (Instrument Panel Reinforcement Right)
	36 (RHD)	Instrument Panel Wire and J/B No.3 (Instrument Panel Reinforcement Left)

* 1 : LHD 1GR-FE * 2 : LHD 3RZ-FE * 3 : LHD 1KD-FTV * 4 : LHD 1KZ-TE * 5 : LHD 5L-E * 6 : LHD 5-Door * 7 : LHD 3-Door
* 8 : LHD 8Way Power Seat * 9 : LHD Except 8Way Power Seat * 10 : RHD 1GR-FE * 11 : RHD 3RZ-FE * 12 : RHD 1KD-FTV
* 13 : RHD 1KZ-TE * 14 : RHD 5L-E * 15 : RHD 5-Door * 16 : RHD 3-Door * 17 : RHD 8Way Power Seat
* 18 : RHD Except 8Way Power Seat

: Connector Joining Wire Harness and Wire Harness

Code	See Page	Joining Wire Harness and Wire Harness (Connector Location)
IC2	88 (LHD)	Instrument Panel Wire and Engine Room Main Wire (Left Kick Panel)
	112 (RHD)	
IC3	88 (LHD)	
	112 (RHD)	
IC4	88 (LHD)	
	112 (RHD)	
IF1	90 (LHD)	Instrument Panel Wire and Instrument Panel Wire (Near the J/B No.1)
	114 (RHD)	
IJ1	92 (LHD)	Instrument Panel Wire and Switch Wire (Front Side of the Console Box)
	116 (RHD)	
IL1	92 (LHD)	Engine Wire and Instrument Panel Wire (Right Side of the Blower Unit)
	116 (RHD)	Engine Wire and Instrument Panel Wire (Left Side of the Blower Unit)
IL2	92 (LHD)	Engine Wire and Instrument Panel Wire (Right Side of the Blower Unit)
	116 (RHD)	Engine Wire and Instrument Panel Wire (Left Side of the Blower Unit)
IL3	92 (LHD)	Engine Wire and Instrument Panel Wire (Right Side of the Blower Unit)
	116 (RHD)	Engine Wire and Instrument Panel Wire (Left Side of the Blower Unit)
IM1	92 (LHD)	Instrument Panel Wire and Engine Room Main Wire (Right Kick Panel)
	116 (RHD)	
IM4	92 (LHD)	
IM5	92 (LHD)	
	116 (RHD)	

: Ground Points

Code	See Page	Ground Points Location
EB	78 (*1)	Front Left Fender
	102 (*10)	
EU	78 (*1)	Rear Side of Right Bank Cylinder Block
	102 (*10)	
EV	78 (*1)	Rear Side of Left Bank Cylinder Block
	102 (*10)	
IN	88 (LHD)	Right Kick Panel
	112 (RHD)	Left Kick Panel

: Splice Points

Code	See Page	Wire Harness with Splice Points	Code	See Page	Wire Harness with Splice Points
I7	90 (LHD)	Instrument Panel Wire	I8	90 (LHD)	Engine Wire
	114 (RHD)			114 (RHD)	

* 1 : LHD 1GR-FE * 2 : LHD 3RZ-FE * 3 : LHD 1KD-FTV * 4 : LHD 1KZ-TE * 5 : LHD 5L-E * 6 : LHD 5-Door * 7 : LHD 3-Door
* 8 : LHD 8Way Power Seat * 9 : LHD Except 8Way Power Seat * 10 : RHD 1GR-FE * 11 : RHD 3RZ-FE * 12 : RHD 1KD-FTV
* 13 : RHD 1KZ-TE * 14 : RHD 5L-E * 15 : RHD 5-Door * 16 : RHD 3-Door * 17 : RHD 8Way Power Seat
* 18 : RHD Except 8Way Power Seat

Cruise Control (1KD–FTV)

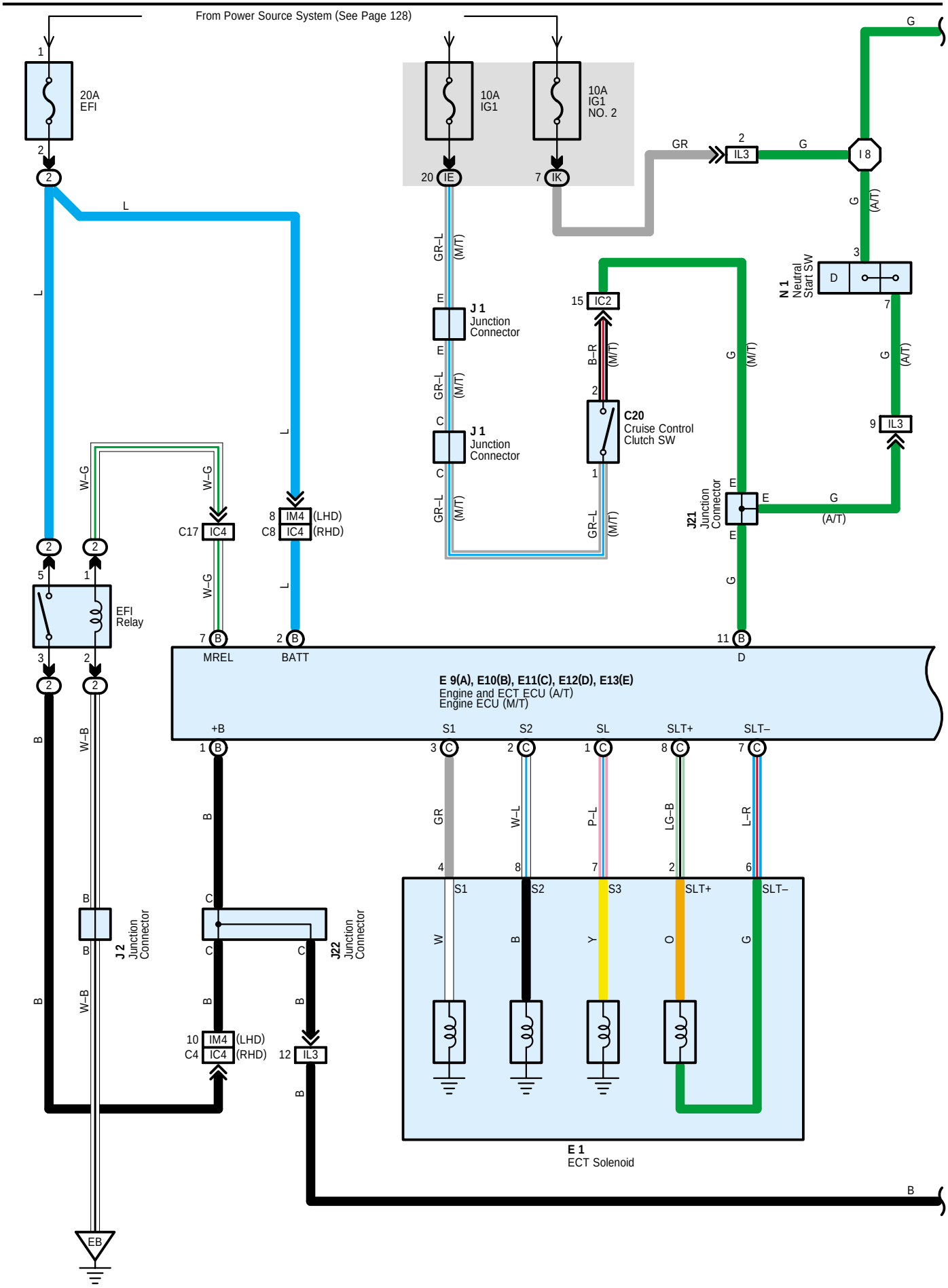

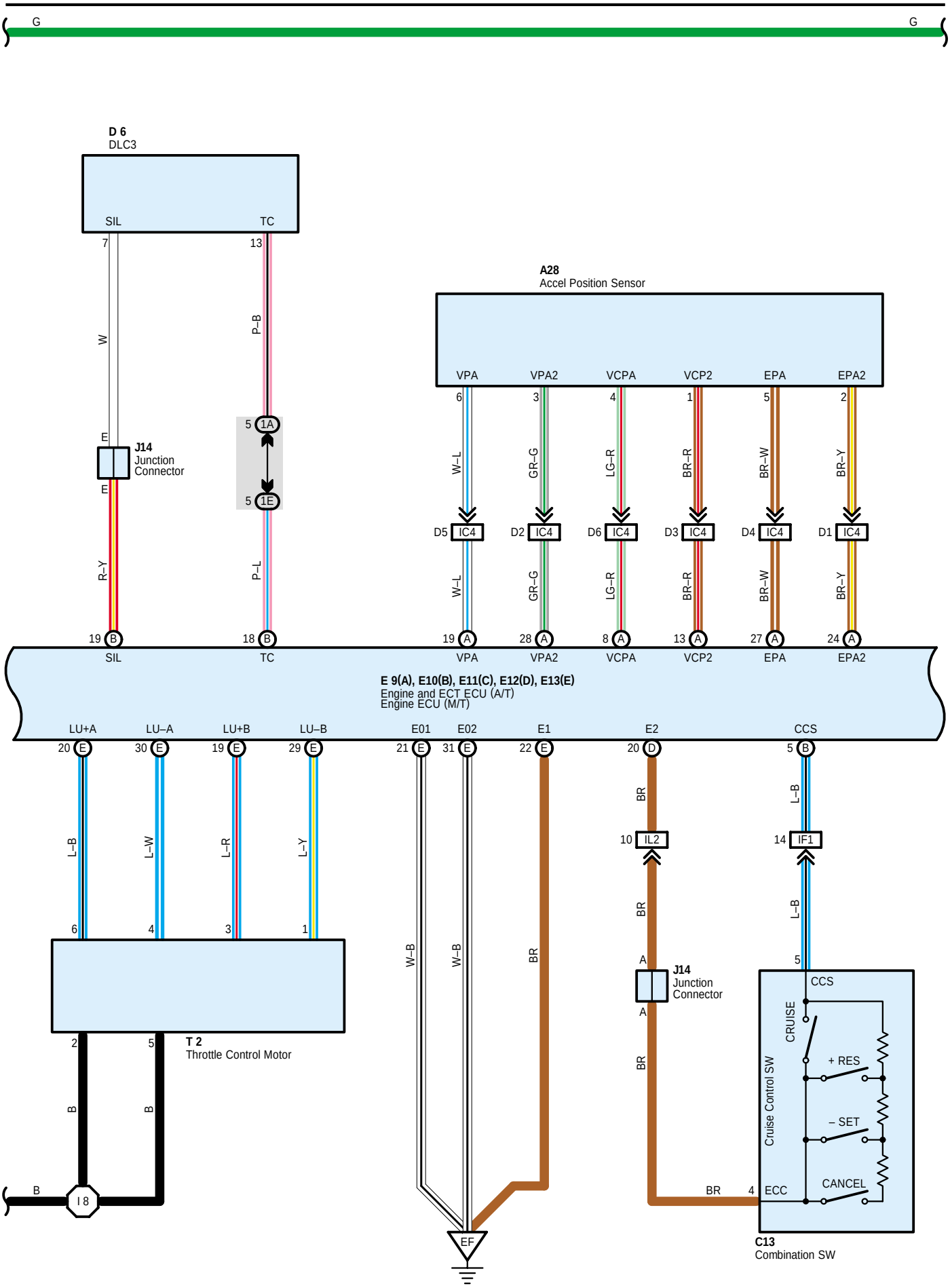
G
G
D 6
DLC3
SIL
TC
7
13
W
P–B
A28
Accel Position Sensor
VPA
VPA2
VCPA
VCP2
EPA
EPA2
6
3
4
1
5
2
W–L
GR–G
LG–R
BR–R
BR–W
BR–Y
D5
IC4
D2
IC4
D6
IC4
D3
IC4
D4
IC4
D1
IC4
5
1A
5
1E
E
J14
Junction
Connector
E
R–Y
P–L
19
B
18
B
19
A
28
A
8
A
13
A
27
A
24
A
SIL
TC
VPA
VPA2
VCPA
VCP2
EPA
EPA2
E 9(A), E10(B), E11(C), E12(D), E13(E)
Engine and ECT ECU (A/T)
Engine ECU (M/T)
LU+A
LU–A
LU+B
LU–B
E01
E02
E1
E2
CCS
20
E
30
E
19
E
29
E
21
E
31
E
22
E
20
D
5
B
L–B
L–W
L–R
L–Y
W–B
W–B
BR
BR
L–B
10
IL2
14
IF1
BR
L–B
6
4
3
1
A
J14
Junction
Connector
A
5
CCS
CRUISE
+ RES
– SET
CANCEL
Cruise Control SW
2
5
T 2
Throttle Control Motor
B
B
BR
BR
BR
4
ECC
B
I 8
EF
C13
Combination SW

Cruise Control (1KD–FTV)

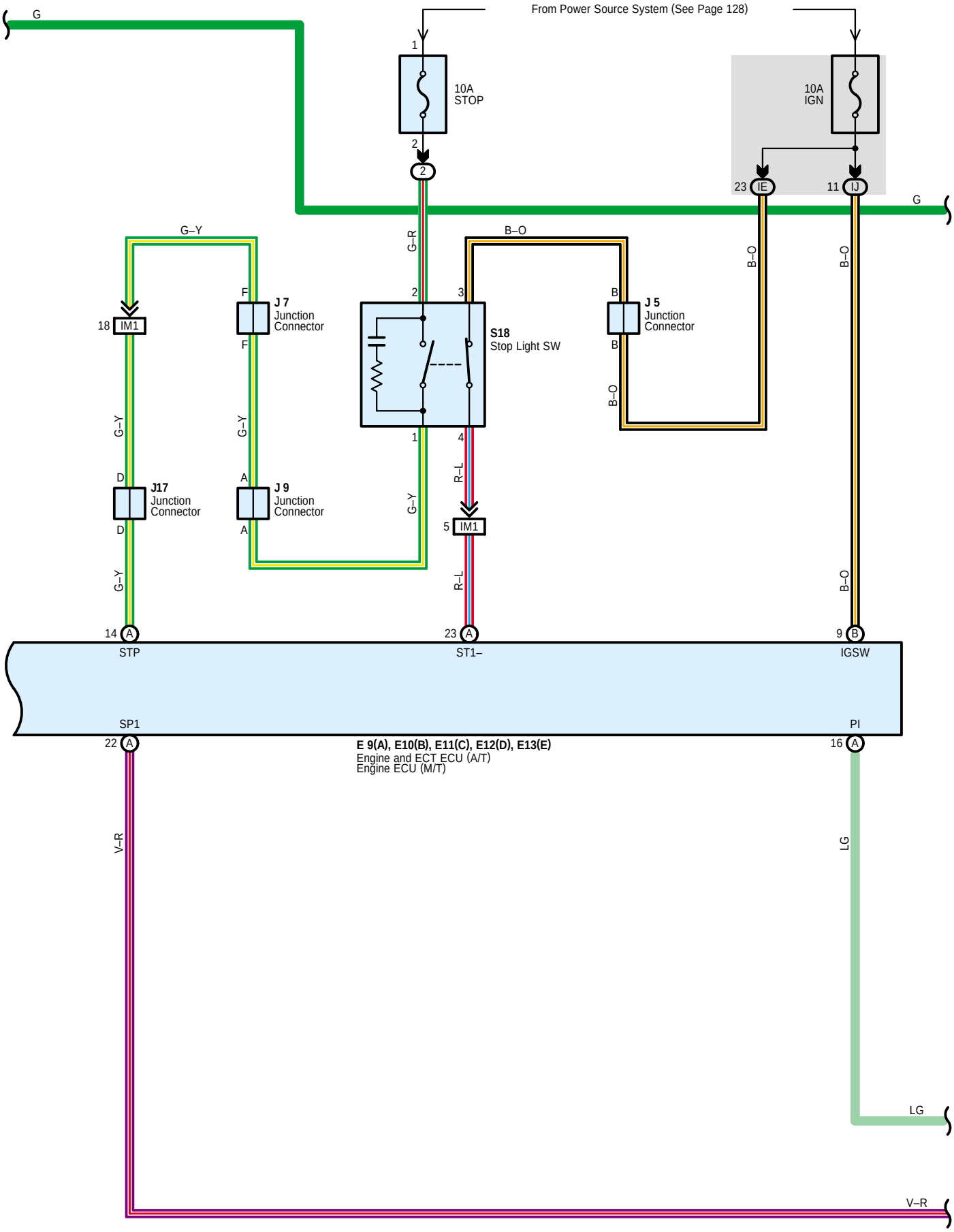

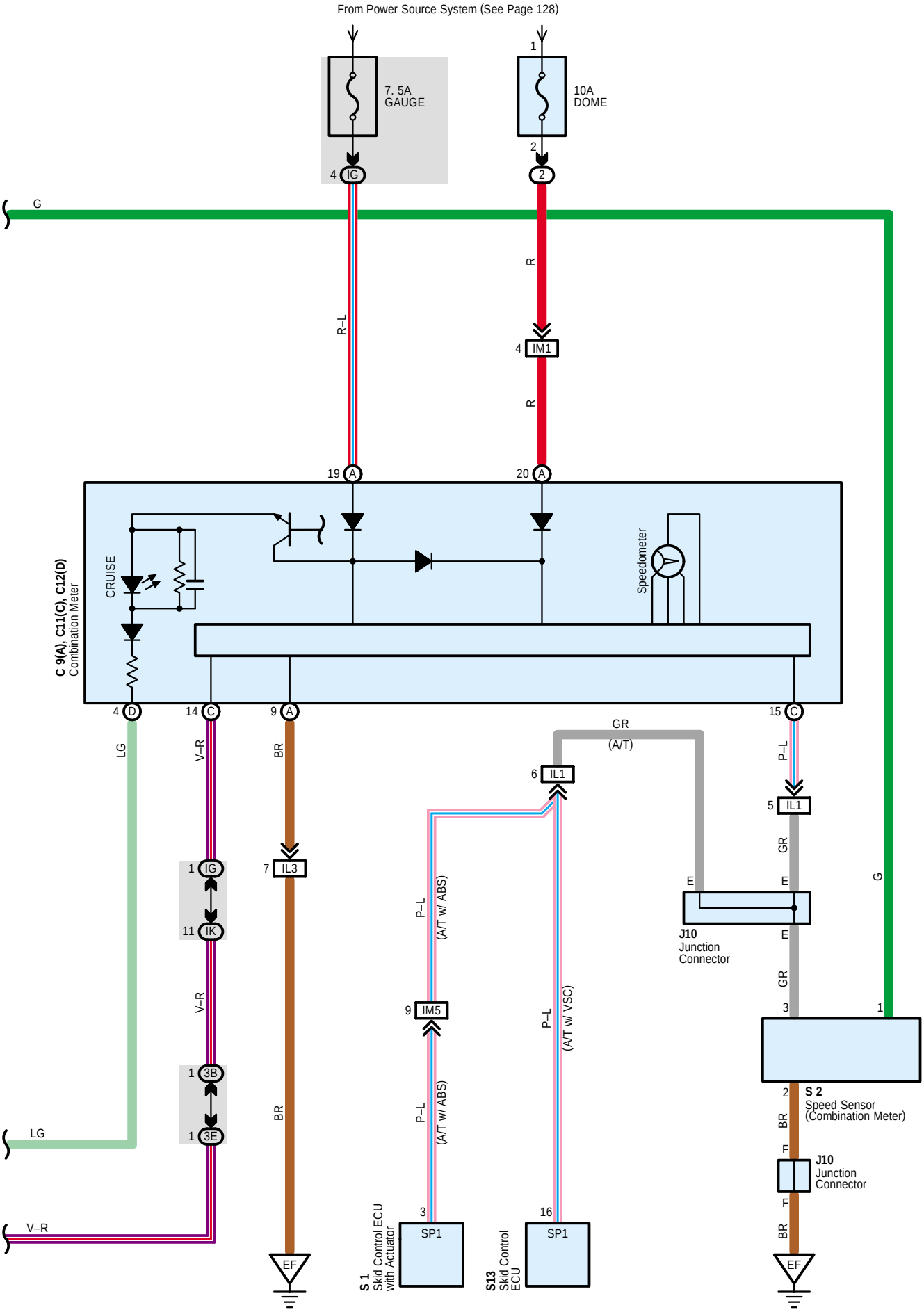
From Power Source System (See Page 128)
7. 5A
GAUGE
10A
DOME
4 IG
1
2
2
G
R–L
R
4 IM1
R
19 A
20 A
C 9(A), C11(C), C12(D)
Combination Meter
CRUISE
Speedometer
4 D
14 C
9 A
15 C
LG
V–R
BR
GR
(A/T)
6 IL1
P–L
5 IL1
GR
7 IL3
1 IG
11 IK
E
E
J10
Junction
Connector
E
G
P–L
(A/T w/ ABS)
9 IM5
P–L
(A/T w/ VSC)
GR
3
1
V–R
1 3B
1 3E
BR
2
S 2
Speed Sensor
(Combination Meter)
BR
F
J10
Junction
Connector
F
BR
LG
V–R
EF
3
SP1
S 1
Skid Control ECU
with Actuator
16
SP1
S13
Skid Control
ECU
EF

System Outline

Cruise control system is constant speed driving control in which fuel injection is controlled by switch operation at hand without stepping on the acceleration pedal when driving at constant speed is desired.

1. Set Operation

When the MAIN SW is turned on, the system starts preparations necessary for the cruise control and turns on the indicator light in the combination meter.

2. Set Speed Control

When the – SET SW is operated with the cruise control main SW turned on during travelling, the constant vehicle speed is controlled.

3. Coast Control

When – SET SW is continuously turned on, fuel injection is controlled for decreasing, which reduces the speed of vehicle.
Every time the – SET SW is turned on instantaneously, the vehicle speed is decelerated approximately 1.5 km/h.

4. Accel Control

When + RES SW is continuously turned on, fuel injection is controlled for increasing, which accelerates the vehicle.
Every time the + RES SW is turned on instantaneously, the vehicle speed is accelerated approximately 1.5 km/h.

5. Resume Control

When the vehicle speed is within the low speed limit (Approximately 40 km/h, 25 mph) if the cruise control is cancelled, use of the + RES SW accelerates the vehicle to the speed level used before canceling the cruise control.

6. Manual Cancel Mechanism

If any of the following signals is input during cruise control travelling, the cruise control is cancelled.
* The stop light SW is turned on.
* The CANCEL SW is turned on.
* The MAIN SW is turned off.
* The cruise control clutch SW is turn on (M/T)

7. Auto Cancel Function

If any of the following conditions is encountered, the cruise control is automatically cancelled.
* The stop light SW wiring is faulty or short–circuited.
* The vehicle speed signal is faulty.
* Fuel injection system abnormal

8. Overdrive Control Function

The overdrive control may be cancelled if the vehicle travels on the slope during cruise control travelling. After the overdrive control has been cancelled, if the vehicle speed exceeds the overdrive return speed (The set speed is minus 2 km/h, minus 1.2 mph) and it is decided that the slope is finished, the vehicle returns to the overdrive control mode again.

Service Hints

E9 (A), E10 (B), E13 (E) Engine and ECT ECU (A/T), Engine ECU (M/T)

(B) 9–Ground : Approx. 12 volts with ignition SW at ON position
(B) 2–Ground : Always approx. 12 volts
(E) 21, (E) 22, (E) 31–Ground : Always continuity
(A) 14–Ground : Approx. 12 volts with brake pedal depressed
(B) 5–Ground : Continuity with cruise control main SW at on
Approx. 1540 Ω with CANCEL SW on in cruise control SW
Approx. 240 Ω with + RES SW on in cruise control SW
Approx. 630 Ω with – SET SW on in cruise control SW

C13 Combination SW

5–4 : Approx. 1540 Ω with CANCEL SW on
Approx. 240 Ω with + RES SW on
Approx. 630 Ω with – SET SW on

: Parts Location

Code		See Page	Code		See Page	Code	See Page
A28		48 (LHD)	E11	C	49 (LHD)	J17	50 (LHD)
		68 (RHD)			69 (RHD)		70 (RHD)
C9	A	49 (LHD)	E12	D	49 (LHD)	J21	50 (LHD)
		69 (RHD)			69 (RHD)		70 (RHD)
C11	C	49 (LHD)	E13	E	49 (LHD)	J22	50 (LHD)
		69 (RHD)			69 (RHD)		70 (RHD)
C12	D	49 (LHD)	J1		43 (*3)	N1	43 (*3)
		69 (RHD)			63 (*12)		63 (*12)
C13		49 (LHD)	J2		43 (*3)	S1	43 (*3)
		69 (RHD)			63 (*12)		63 (*12)
C20		49 (LHD)	J5		43 (*3)	S2	43 (*3)
		69 (RHD)			63 (*12)		63 (*12)
D6		49 (LHD)	J7		50 (LHD)	S13	51 (LHD)
		69 (RHD)			70 (RHD)		71 (RHD)
E1		42 (*3)	J9		50 (LHD)	S18	51 (LHD)
		62 (*12)			70 (RHD)		71 (RHD)
E9	A	49 (LHD)	J10		50 (LHD)	T2	43 (*3)
		69 (RHD)			70 (RHD)		63 (*12)
E10	B	49 (LHD)	J14		50 (LHD)		
		69 (RHD)			70 (RHD)		

: Relay Blocks

Code	See Page	Relay Blocks (Relay Block Location)
2	23	Engine Room R/B (Engine Compartment Left)

: Junction Block and Wire Harness Connector

Code	See Page	Junction Block and Wire Harness (Connector Location)
IE	26 (LHD)	Engine Room Main Wire and Driver Side J/B (Lower Finish Panel)
	28 (RHD)	
IG	27 (LHD)	Instrument Panel Wire and Driver Side J/B (Lower Finish Panel)
	29 (RHD)	
IJ	27 (LHD)	
	29 (RHD)	
IK	27 (LHD)	
	29 (RHD)	
1A	32 (LHD)	Instrument Panel Wire and J/B No.1 (Instrument Panel Reinforcement Left)
	32 (RHD)	Instrument Panel Wire and J/B No.1 (Instrument Panel Reinforcement Right)
1E	32 (LHD)	Instrument Panel Wire and J/B No.1 (Instrument Panel Reinforcement Left)
	32 (RHD)	Instrument Panel Wire and J/B No.1 (Instrument Panel Reinforcement Right)
3B	36 (LHD)	Instrument Panel Wire and J/B No.3 (Instrument Panel Reinforcement Right)
	36 (RHD)	Instrument Panel Wire and J/B No.3 (Instrument Panel Reinforcement Left)
3E	36 (LHD)	Instrument Panel Wire and J/B No.3 (Instrument Panel Reinforcement Right)
	36 (RHD)	Instrument Panel Wire and J/B No.3 (Instrument Panel Reinforcement Left)

* 1 : LHD 1GR-FE * 2 : LHD 3RZ-FE * 3 : LHD 1KD-FTV * 4 : LHD 1KZ-TE * 5 : LHD 5L-E * 6 : LHD 5-Door * 7 : LHD 3-Door
* 8 : LHD 8Way Power Seat * 9 : LHD Except 8Way Power Seat * 10 : RHD 1GR-FE * 11 : RHD 3RZ-FE * 12 : RHD 1KD-FTV
* 13 : RHD 1KZ-TE * 14 : RHD 5L-E * 15 : RHD 5-Door * 16 : RHD 3-Door * 17 : RHD 8Way Power Seat
* 18 : RHD Except 8Way Power Seat

: Connector Joining Wire Harness and Wire Harness

Code	See Page	Joining Wire Harness and Wire Harness (Connector Location)
IC2	88 (LHD)	Instrument Panel Wire and Engine Room Main Wire (Left Kick Panel)
	112 (RHD)	
IC4	88 (LHD)	
	112 (RHD)	
IF1	90 (LHD)	Instrument Panel Wire and Instrument Panel Wire (Near the J/B No.1)
	114 (RHD)	
IL1	92 (LHD)	Engine Wire and Instrument Panel Wire (Right Side of the Blower Unit)
	116 (RHD)	Engine Wire and Instrument Panel Wire (Left Side of the Blower Unit)
IL2	92 (LHD)	Engine Wire and Instrument Panel Wire (Right Side of the Blower Unit)
	116 (RHD)	Engine Wire and Instrument Panel Wire (Left Side of the Blower Unit)
IL3	92 (LHD)	Engine Wire and Instrument Panel Wire (Right Side of the Blower Unit)
	116 (RHD)	Engine Wire and Instrument Panel Wire (Left Side of the Blower Unit)
IM1	92 (LHD)	Instrument Panel Wire and Engine Room Main Wire (Right Kick Panel)
	116 (RHD)	
IM4	92 (LHD)	
IM5	92 (LHD)	
	116 (RHD)	

: Ground Points

Code	See Page	Ground Points Location
EB	82 (*3)	Front Left Fender
	106 (*12)	
EF	82 (*3)	Rear Part of Cylinder Block
	106 (*12)	

: Splice Points

Code	See Page	Wire Harness with Splice Points	Code	See Page	Wire Harness with Splice Points
I8	90 (LHD)	Engine Wire	I8	114 (RHD)	Engine Wire

* 1 : LHD 1GR–FE * 2 : LHD 3RZ–FE * 3 : LHD 1KD–FTV * 4 : LHD 1KZ–TE * 5 : LHD 5L–E * 6 : LHD 5–Door * 7 : LHD 3–Door
* 8 : LHD 8Way Power Seat * 9 : LHD Except 8Way Power Seat * 10 : RHD 1GR–FE * 11 : RHD 3RZ–FE * 12 : RHD 1KD–FTV
* 13 : RHD 1KZ–TE * 14 : RHD 5L–E * 15 : RHD 5–Door * 16 : RHD 3–Door * 17 : RHD 8Way Power Seat
* 18 : RHD Except 8Way Power Seat

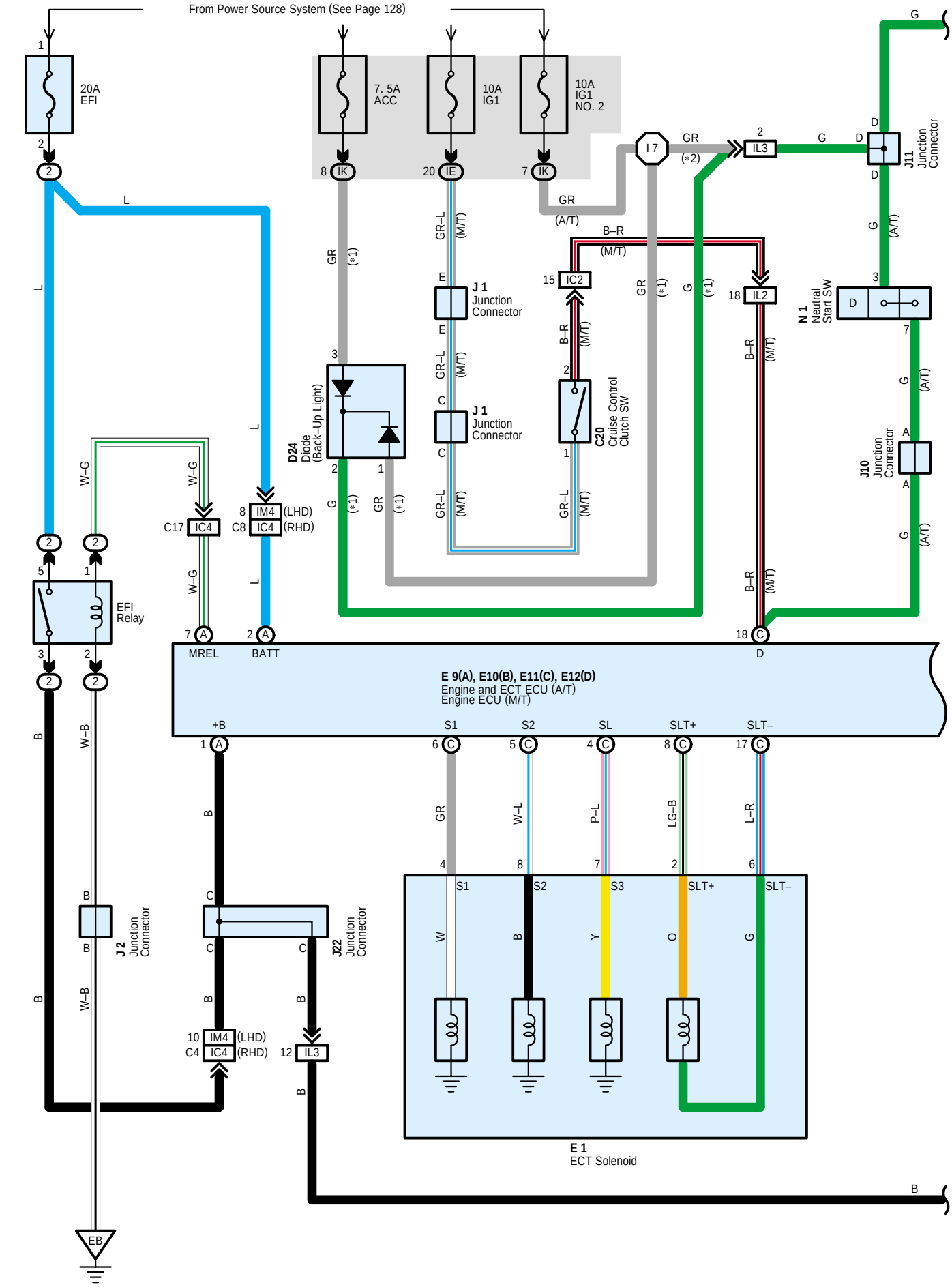
From Power Source System (See Page 128)
20A EFI
7. 5A ACC
10A IG1
10A IG1 NO. 2
J 1 Junction Connector
D24 Diode (Back–Up Light)
C20 Cruise Control Clutch SW
J11 Junction Connector
N 1 Neutral Start SW
J10 Junction Connector
EFI Relay
E 9(A), E10(B), E11(C), E12(D)
Engine and ECT ECU (A/T)
Engine ECU (M/T)
MREL
BATT
J 2 Junction Connector
J22 Junction Connector
E 1
ECT Solenoid
EB

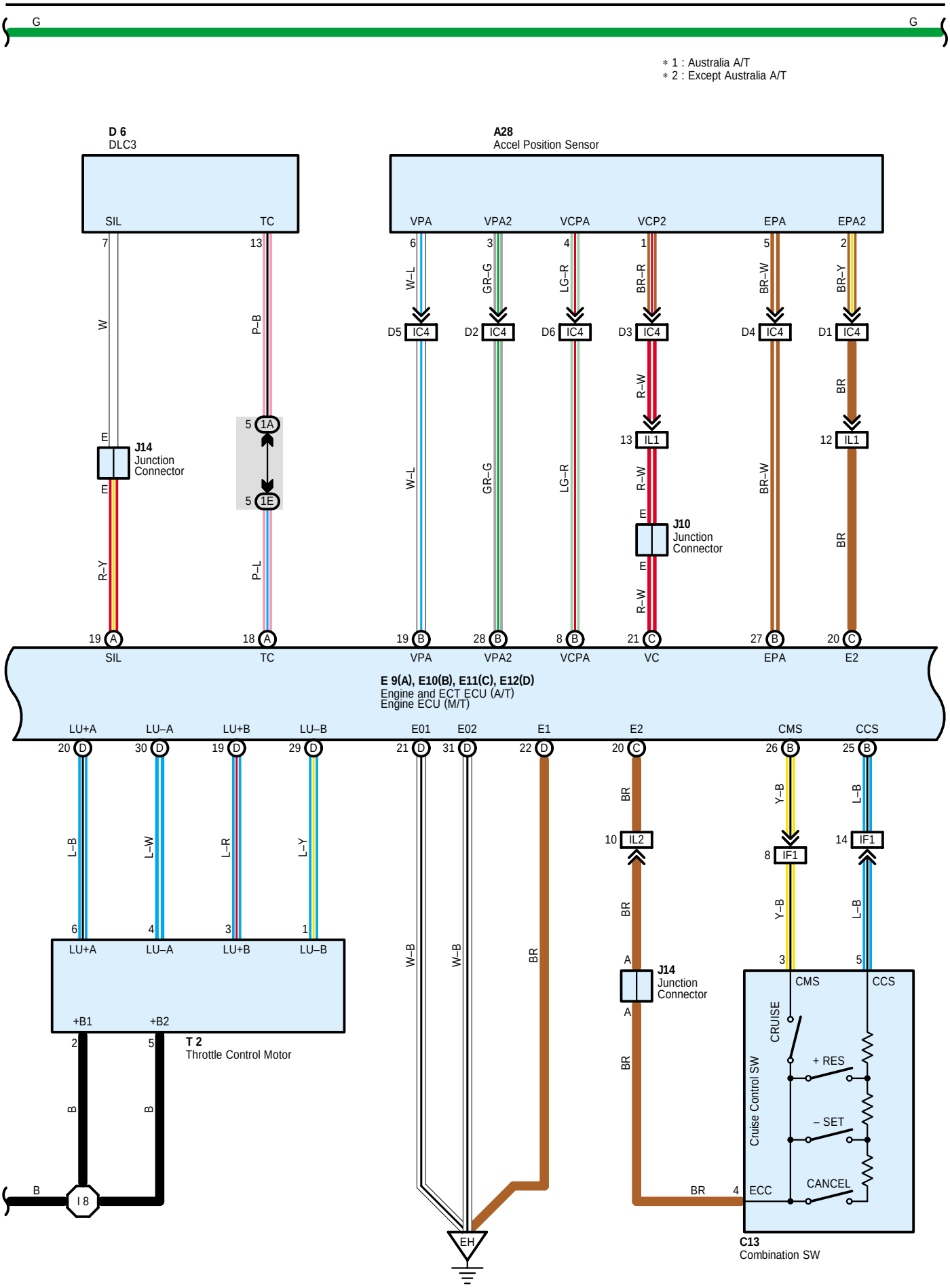
G
G
* 1 : Australia A/T
* 2 : Except Australia A/T
D 6
DLC3
SIL
TC
A28
Accel Position Sensor
VPA
VPA2
VCPA
VCP2
EPA
EPA2
J14
Junction Connector
J10
Junction Connector
E 9(A), E10(B), E11(C), E12(D)
Engine and ECT ECU (A/T)
Engine ECU (M/T)
SIL
TC
VPA
VPA2
VCPA
VC
EPA
E2
LU+A
LU–A
LU+B
LU–B
E01
E02
E1
E2
CMS
CCS
T 2
Throttle Control Motor
+B1
+B2
I 8
EH
C13
Combination SW
Cruise Control SW
CRUISE
+ RES
– SET
CANCEL
ECC

Cruise Control (1KZ–TE)

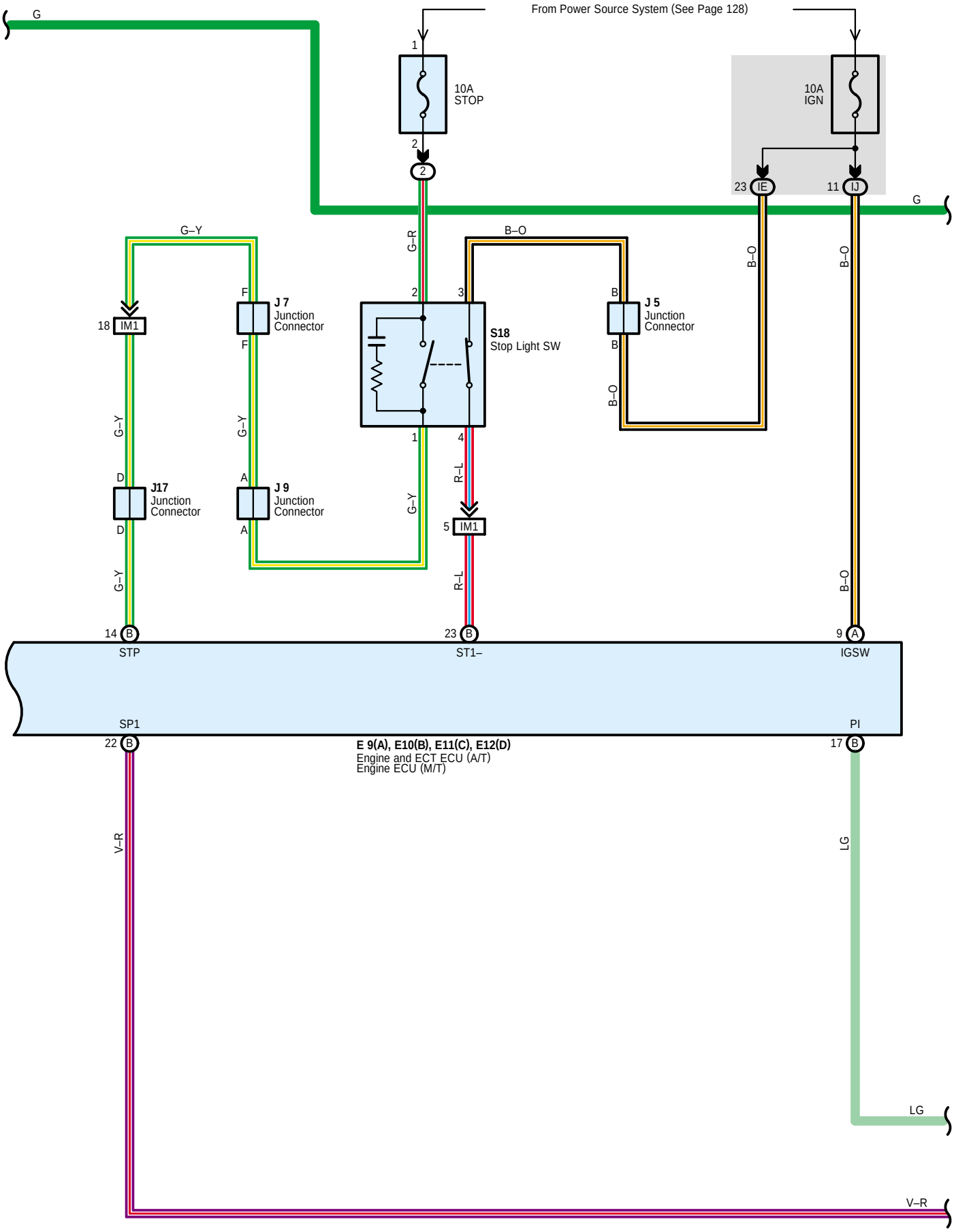

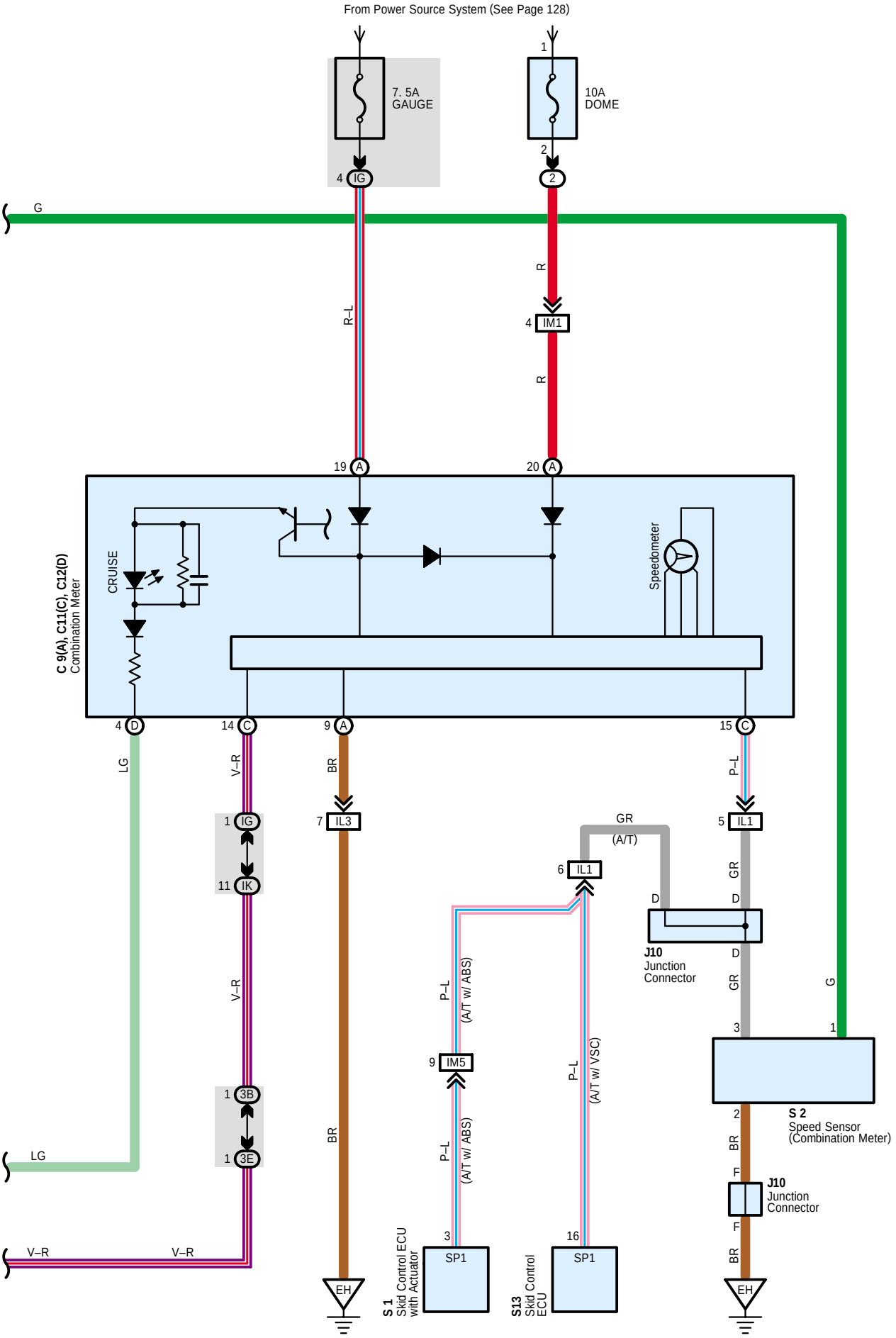
From Power Source System (See Page 128)
7. 5A
GAUGE
10A
DOME
4 IG
1
2
2
G
R–L
R
4 IM1
R
19 A
20 A
C 9(A), C11(C), C12(D)
Combination Meter
CRUISE
Speedometer
4 D
14 C
9 A
15 C
LG
V–R
BR
P–L
1 IG
7 IL3
5 IL1
GR
(A/T)
6 IL1
11 IK
D
D
J10
Junction
Connector
D
GR
G
V–R
P–L
(A/T w/ ABS)
3
1
9 IM5
P–L
(A/T w/ VSC)
1 3B
2
S 2
Speed Sensor
(Combination Meter)
BR
BR
1 3E
LG
F
J10
Junction
Connector
F
V–R
V–R
3
SP1
16
SP1
BR
EH
EH
S 1
Skid Control ECU
with Actuator
S13
Skid Control
ECU

System Outline

Cruise control system is constant speed driving control in which fuel injection is controlled by switch operation at hand without stepping on the acceleration pedal when driving at constant speed is desired.

1. Set Operation

When the MAIN SW is turned on, the system starts preparations necessary for the cruise control and turns on the indicator light in the combination meter.

2. Set Speed Control

When the – SET SW is operated with the cruise control main SW turned on during travelling, the constant vehicle speed is controlled.

3. Coast Control

When – SET SW is continuously turned on, fuel injection is controlled for decreasing, which reduces the speed of vehicle.
Every time the – SET SW is turned on instantaneously, the vehicle speed is decelerated approximately 1.5 km/h.

4. Accel Control

When + RES SW is continuously turned on, fuel injection is controlled for increasing, which accelerates the vehicle.
Every time the + RES SW is turned on instantaneously, the vehicle speed is accelerated approximately 1.5 km/h.

5. Resume Control

When the vehicle speed is within the low speed limit (Approximately 40 km/h, 25 mph) if the cruise control is cancelled, use of the + RES SW accelerates the vehicle to the speed level used before canceling the cruise control.

6. Manual Cancel Mechanism

If any of the following signals is input during cruise control travelling, the cruise control is cancelled.
* The stop light SW is turned on.
* The CANCEL SW is turned on.
* The MAIN SW is turned off.
* The cruise control clutch SW is turn on (M/T)

7. Auto Cancel Function

If any of the following conditions is encountered, the cruise control is automatically cancelled.
* The stop light SW wiring is faulty or short–circuited.
* The vehicle speed signal is faulty.
* Fuel injection system abnormal

8. Overdrive Control Function

The overdrive control may be cancelled if the vehicle travels on the slope during cruise control travelling. After the overdrive control has been cancelled, if the vehicle speed exceeds the overdrive return speed (The set speed is minus 2 km/h, minus 1.2 mph) and it is decided that the slope is finished, the vehicle returns to the overdrive control mode again.

Service Hints

E9 (A), E10 (B), E12 (D) Engine and ECT ECU (A/T), Engine ECU (M/T)

(A) 9–Ground : Approx. 12 volts with ignition SW at ON position
(A) 2–Ground : Always approx. 12 volts
(D) 21, (D) 22, (D) 31–Ground : Always continuity
(B) 14–Ground : Approx. 12 volts with brake pedal depressed
(B) 26–Ground : Approx. 12 volts with cruise control main SW on
(B) 25–Ground : Approx. 1540 Ω with CANCEL SW on in cruise control SW
Approx. 240 Ω with + RES SW on in cruise control SW
Approx. 630 Ω with – SET SW on in cruise control SW

C13 Combination SW

5–4 : Approx. 1540 Ω with CANCEL SW on
Approx. 240 Ω with + RES SW on
Approx. 630 Ω with – SET SW on
3–4 : Continuity with cruise control main SW at on

: Parts Location

Code		See Page	Code		See Page	Code	See Page
A28		48 (LHD)	E10	B	49 (LHD)	J11	70 (RHD)
		68 (RHD)			69 (RHD)	J14	50 (LHD)
C9	A	49 (LHD)	E11	C	49 (LHD)		70 (RHD)
		69 (RHD)			69 (RHD)	J17	50 (LHD)
C11	C	49 (LHD)	E12	D	49 (LHD)		70 (RHD)
		69 (RHD)			69 (RHD)	J22	50 (LHD)
C12	D	49 (LHD)	J1		45 (*4)		70 (RHD)
		69 (RHD)			65 (*13)	N1	45 (*4)
C13		49 (LHD)	J2		45 (*4)		65 (*13)
		69 (RHD)			65 (*13)	S1	45 (*4)
C20		49 (LHD)	J5		45 (*4)		65 (*13)
		69 (RHD)			65 (*13)	S2	45 (*4)
D6		49 (LHD)	J7		50 (LHD)		65 (*13)
		69 (RHD)			70 (RHD)	S13	51 (LHD)
D24		69 (RHD)	J9		50 (LHD)		71 (RHD)
E1		44 (*4)			70 (RHD)	S18	51 (LHD)
		64 (*13)	J10		50 (LHD)		71 (RHD)
E9	A	49 (LHD)			70 (RHD)	T2	45 (*4)
		69 (RHD)	J11		50 (LHD)		65 (*13)

: Relay Blocks

Code	See Page	Relay Blocks (Relay Block Location)
2	23	Engine Room R/B (Engine Compartment Left)

: Junction Block and Wire Harness Connector

Code	See Page	Junction Block and Wire Harness (Connector Location)
IE	26 (LHD)	Engine Room Main Wire and Driver Side J/B (Lower Finish Panel)
	28 (RHD)	
IG	27 (LHD)	Instrument Panel Wire and Driver Side J/B (Lower Finish Panel)
	29 (RHD)	
IJ	27 (LHD)	
	29 (RHD)	
IK	27 (LHD)	
	29 (RHD)	
1A	32 (LHD)	Instrument Panel Wire and J/B No.1 (Instrument Panel Reinforcement Left)
	32 (RHD)	Instrument Panel Wire and J/B No.1 (Instrument Panel Reinforcement Right)
1E	32 (LHD)	Instrument Panel Wire and J/B No.1 (Instrument Panel Reinforcement Left)
	32 (RHD)	Instrument Panel Wire and J/B No.1 (Instrument Panel Reinforcement Right)
3B	36 (LHD)	Instrument Panel Wire and J/B No.3 (Instrument Panel Reinforcement Right)
	36 (RHD)	Instrument Panel Wire and J/B No.3 (Instrument Panel Reinforcement Left)
3E	36 (LHD)	Instrument Panel Wire and J/B No.3 (Instrument Panel Reinforcement Right)
	36 (RHD)	Instrument Panel Wire and J/B No.3 (Instrument Panel Reinforcement Left)

* 1 : LHD 1GR-FE * 2 : LHD 3RZ-FE * 3 : LHD 1KD-FTV * 4 : LHD 1KZ-TE * 5 : LHD 5L-E * 6 : LHD 5-Door * 7 : LHD 3-Door
* 8 : LHD 8Way Power Seat * 9 : LHD Except 8Way Power Seat * 10 : RHD 1GR-FE * 11 : RHD 3RZ-FE * 12 : RHD 1KD-FTV
* 13 : RHD 1KZ-TE * 14 : RHD 5L-E * 15 : RHD 5-Door * 16 : RHD 3-Door * 17 : RHD 8Way Power Seat
* 18 : RHD Except 8Way Power Seat

: Connector Joining Wire Harness and Wire Harness

Code	See Page	Joining Wire Harness and Wire Harness (Connector Location)
IC2	88 (LHD)	Instrument Panel Wire and Engine Room Main Wire (Left Kick Panel)
	112 (RHD)	
IC4	88 (LHD)	
	112 (RHD)	
IF1	90 (LHD)	Instrument Panel Wire and Instrument Panel Wire (Near the J/B No.1)
	114 (RHD)	
IL1	92 (LHD)	Engine Wire and Instrument Panel Wire (Right Side of the Blower Unit)
	116 (RHD)	Engine Wire and Instrument Panel Wire (Left Side of the Blower Unit)
IL2	92 (LHD)	Engine Wire and Instrument Panel Wire (Right Side of the Blower Unit)
	116 (RHD)	Engine Wire and Instrument Panel Wire (Left Side of the Blower Unit)
IL3	92 (LHD)	Engine Wire and Instrument Panel Wire (Right Side of the Blower Unit)
	116 (RHD)	Engine Wire and Instrument Panel Wire (Left Side of the Blower Unit)
IM1	92 (LHD)	Instrument Panel Wire and Engine Room Main Wire (Right Kick Panel)
	116 (RHD)	
IM4	92 (LHD)	
IM5	92 (LHD)	
	116 (RHD)	

: Ground Points

Code	See Page	Ground Points Location
EB	84 (*4)	Front Left Fender
	108 (*13)	
EH	84 (*4)	Rear Part of Cylinder Block
	108 (*13)	

: Splice Points

Code	See Page	Wire Harness with Splice Points	Code	See Page	Wire Harness with Splice Points
I7	90 (LHD)	Instrument Panel Wire	I8	90 (LHD)	Engine Wire
	114 (RHD)			114 (RHD)	

* 1 : LHD 1GR–FE * 2 : LHD 3RZ–FE * 3 : LHD 1KD–FTV * 4 : LHD 1KZ–TE * 5 : LHD 5L–E * 6 : LHD 5–Door * 7 : LHD 3–Door
* 8 : LHD 8Way Power Seat * 9 : LHD Except 8Way Power Seat * 10 : RHD 1GR–FE * 11 : RHD 3RZ–FE * 12 : RHD 1KD–FTV
* 13 : RHD 1KZ–TE * 14 : RHD 5L–E * 15 : RHD 5–Door * 16 : RHD 3–Door * 17 : RHD 8Way Power Seat
* 18 : RHD Except 8Way Power Seat

NOTICE: When inspecting or repairing the SRS, perform the operation in accordance with the following precautionary instructions and the procedure and precautions in the Repair Manual for the applicable model year.

- Malfunction symptoms of the SRS are difficult to confirm, so the DTCs become the most important source of information when troubleshooting. When troubleshooting the SRS, always inspect the DTCs before disconnecting the battery.
- **Work must be started after 90 seconds from when the ignition switch is turned to the "LOCK" position and the negative (–) terminal cable is disconnected from the battery.**
  (The SRS is equipped with a back–up power source so that if work is started within 90 seconds from disconnecting the negative (–) terminal cable of the battery, the SRS may be deployed.)
- When the negative (–) terminal cable is disconnected from the battery, the memory of the clock and audio system will be canceled. So before starting work, make a record of the contents memorized in the audio memory system. When work is finished, reset the audio systems as they were before and adjust the clock. This vehicle has power tilt and power telescopic steering, power seat and power outside rear view mirror which are all equipped with memory function. However, it is not possible to make a record of the memory contents. So when the work is finished, it will be necessary to explain this fact tot the customer, and ask the customer to adjust the features and reset the memory. To avoid erasing the memory in each memory system, never use a back–up power supply from outside the vehicle.
- Before repairs, remove the airbag sensor if shocks are likely to be applied to the sensor during repairs.
- Do not expose the steering wheel pad, front passenger airbag assembly, side airbag assembly, curtain shield airbag assembly, seat belt pretensioner, front airbag sensor assembly, airbag sensor assembly or side airbag sensor assembly directly to hot air or flames.
- Even in cases of a minor collision where the SRS does not deploy, the steering wheel pad, front passenger airbag assembly, side airbag assembly, curtain shield airbag assembly, seat belt pretensioner, front airbag sensor assembly, airbag sensor assembly and side airbag sensor assembly should be inspected.
- Never use SRS parts from another vehicle. When replacing parts, replace them with new parts.
- Never disassemble and repair the steering wheel pad, front passenger airbag assembly, side airbag assembly, curtain shield airbag assembly, seat belt pretensioner, front airbag sensor assembly, airbag sensor assembly or side airbag sensor assembly in order to reuse it.
- If the steering wheel pad, front passenger airbag assembly, side airbag assembly, curtain shield airbag assembly, seat belt pretensioner, front airbag sensor assembly, airbag sensor assembly or side airbag sensor assembly has been dropped, or if there are cracks, dents or other defects in the case, bracket or connector, replace them with new ones.
- Use a volt/ohmmeter with high impedance (10 kΩ/V minimum) for troubleshooting the system's electrical circuits.
- Information labels are attached to the periphery of the SRS components. Follow the instructions on the notices.
- After work on the SRS is completed, perform the SRS warning light check.
- If the vehicle is equipped with a mobile communication system, refer to the precaution in the IN section of the Repair Manual.

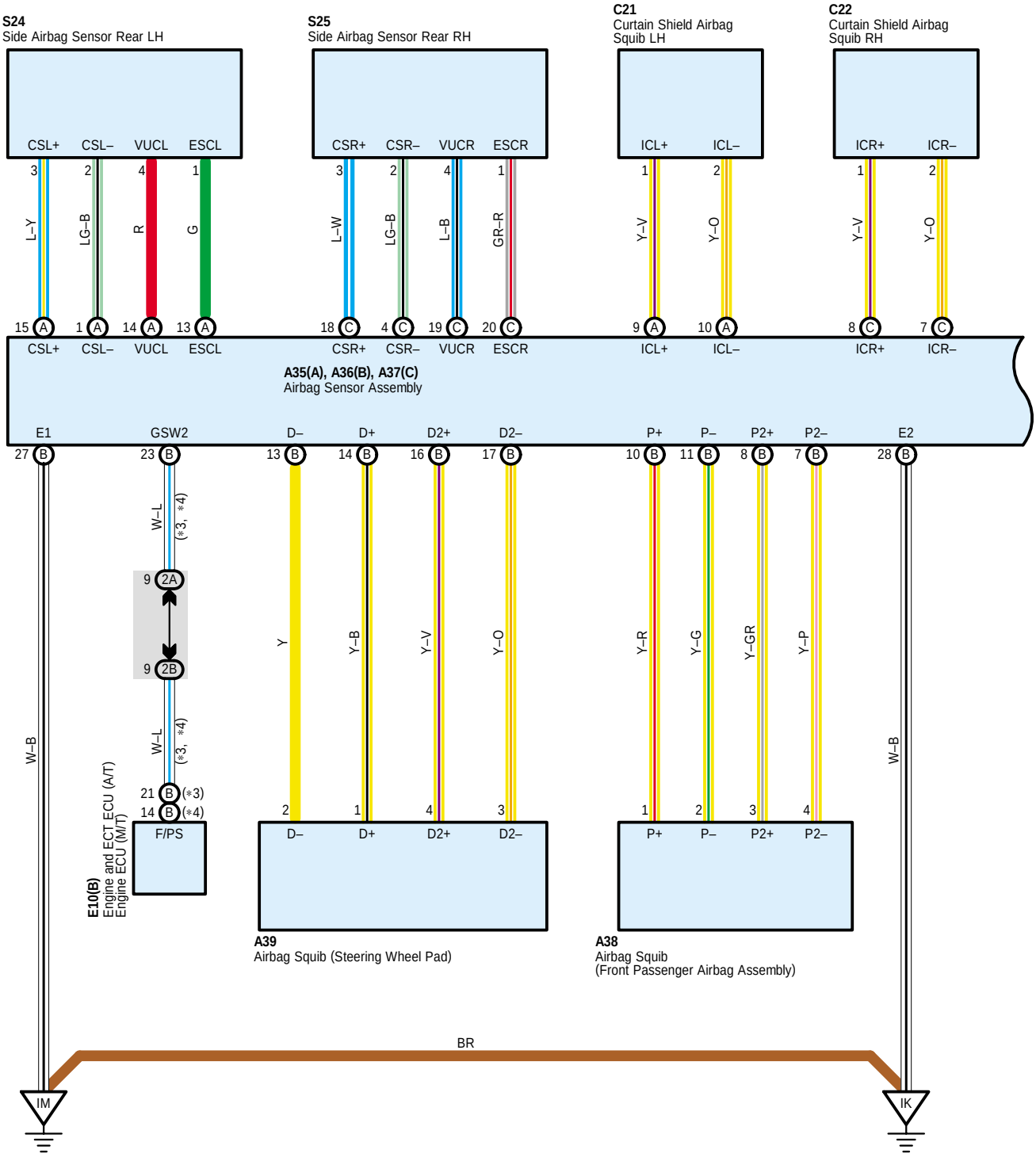
S24
Side Airbag Sensor Rear LH
S25
Side Airbag Sensor Rear RH
C21
Curtain Shield Airbag Squib LH
C22
Curtain Shield Airbag Squib RH
CSL+ CSL– VUCL ESCL
CSR+ CSR– VUCR ESCR
ICL+ ICL–
ICR+ ICR–
L–Y LG–B R G
L–W LG–B L–B GR–R
Y–V Y–O
A35(A), A36(B), A37(C)
Airbag Sensor Assembly
E1 GSW2 D– D+ D2+ D2–
P+ P– P2+ P2– E2
W–L (*3, *4)
W–B
E10(B)
Engine and ECT ECU (A/T)
Engine ECU (M/T)
F/PS
Y Y–B Y–V Y–O
Y–R Y–G Y–GR Y–P
A39
Airbag Squib (Steering Wheel Pad)
A38
Airbag Squib
(Front Passenger Airbag Assembly)
BR
IM
IK

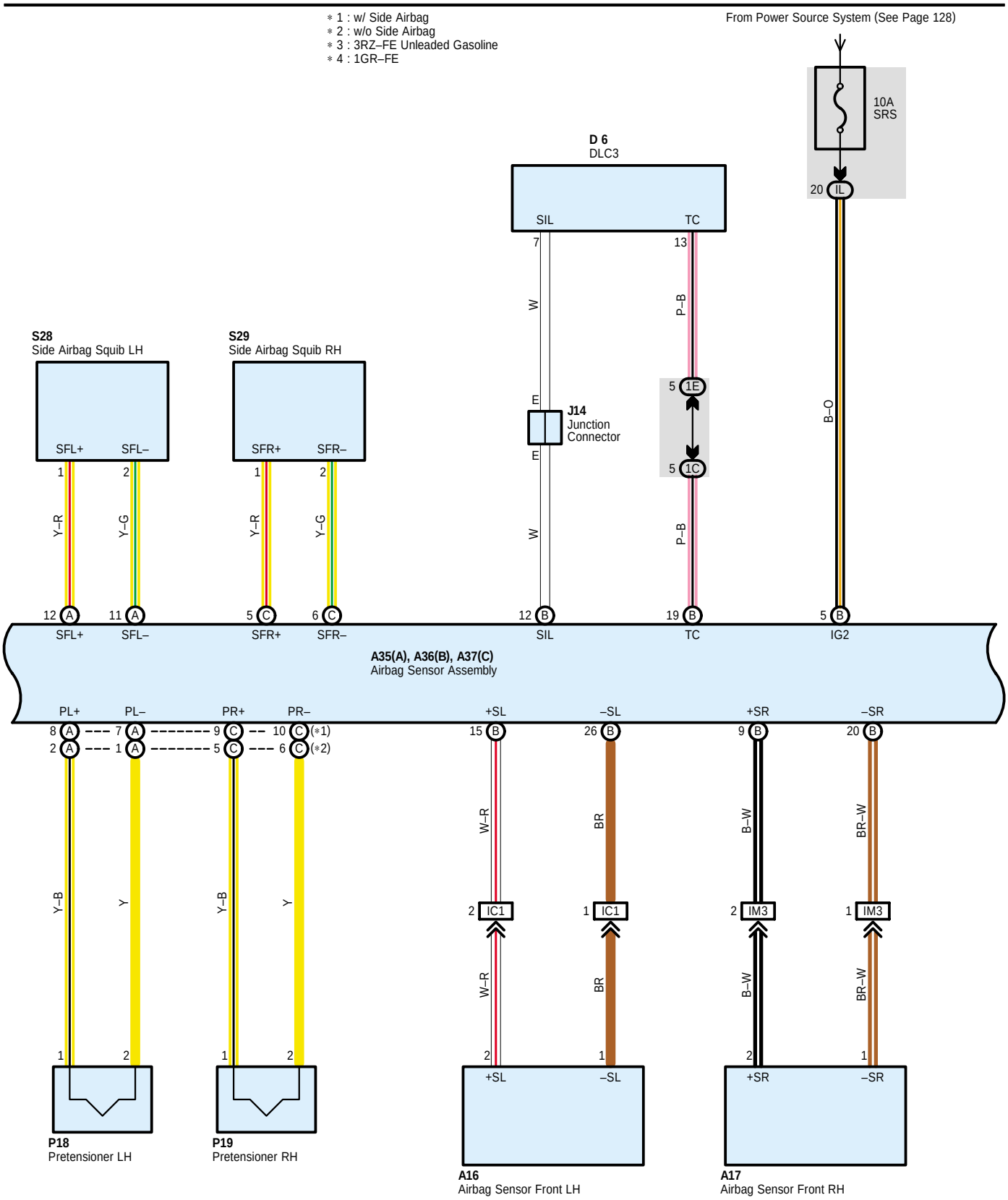
* 1 : w/ Side Airbag
* 2 : w/o Side Airbag
* 3 : 3RZ–FE Unleaded Gasoline
* 4 : 1GR–FE
From Power Source System (See Page 128)
10A
SRS
20 IL
D 6
DLC3
SIL
TC
7
13
W
P–B
S28
Side Airbag Squib LH
S29
Side Airbag Squib RH
SFL+
SFL–
SFR+
SFR–
J14
Junction
Connector
5 1E
5 1C
B–O
Y–R
Y–G
12 A
11 A
5 C
6 C
12 B
19 B
5 B
IG2
A35(A), A36(B), A37(C)
Airbag Sensor Assembly
PL+
PL–
PR+
PR–
+SL
–SL
+SR
–SR
8 A
7 A
9 C
10 C (*1)
2 A
1 A
5 C
6 C (*2)
15 B
26 B
9 B
20 B
W–R
BR
B–W
BR–W
Y–B
Y
2 IC1
1 IC1
2 IM3
1 IM3
P18
Pretensioner LH
P19
Pretensioner RH
A16
Airbag Sensor Front LH
A17
Airbag Sensor Front RH

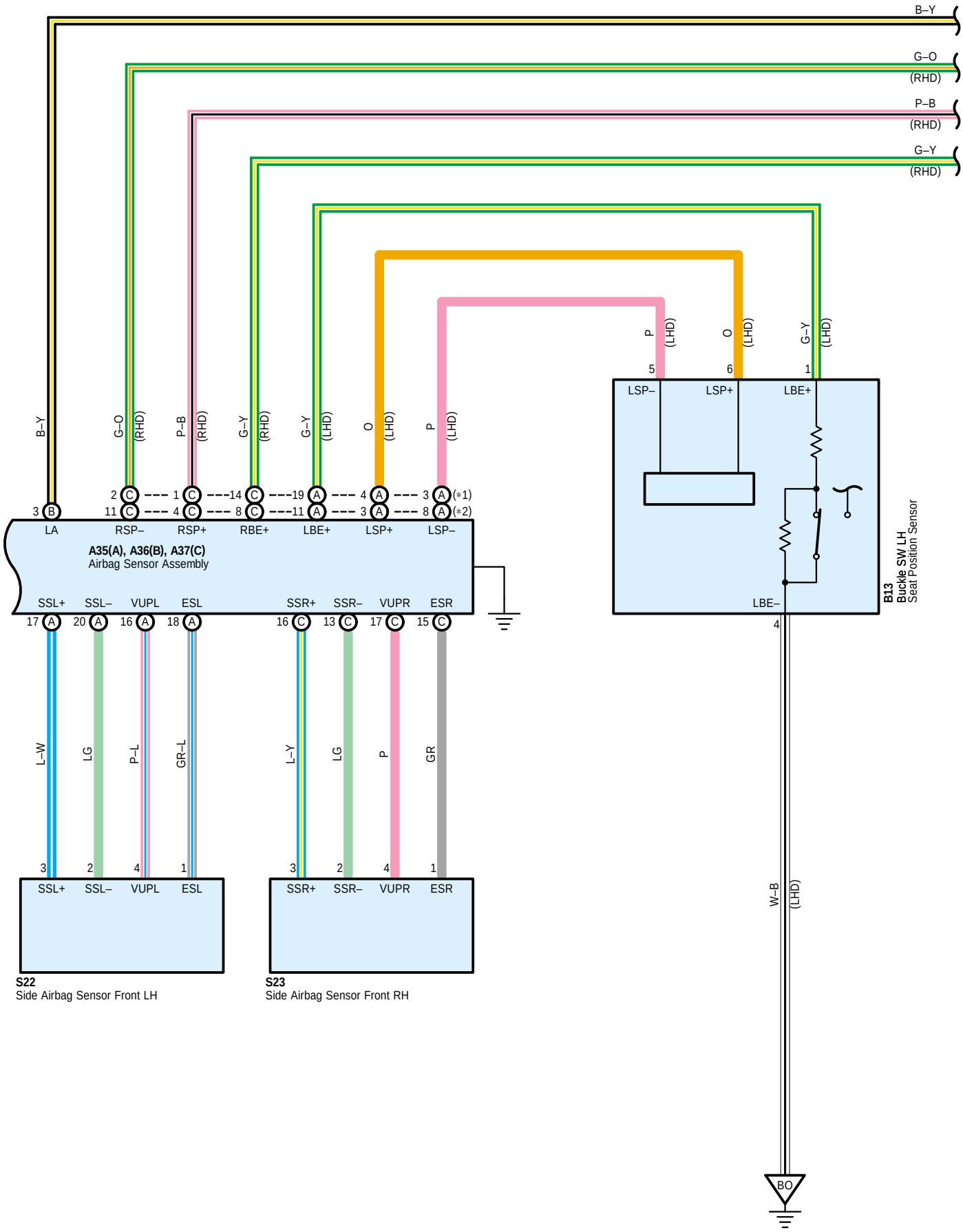
B–Y
G–O
(RHD)
P–B
(RHD)
G–Y
(RHD)
P
(LHD)
O
(LHD)
G–Y
(LHD)
5
6
1
LSP–
LSP+
LBE+
LBE–
4
B13
Buckle SW LH
Seat Position Sensor
B–Y
G–O
(RHD)
P–B
(RHD)
G–Y
(RHD)
G–Y
(LHD)
O
(LHD)
P
(LHD)
2 C --- 1 C ---14 C ---19 A --- 4 A --- 3 A (*1)
11 C --- 4 C --- 8 C ---11 A --- 3 A --- 8 A (*2)
3 B
LA
RSP–
RSP+
RBE+
LBE+
LSP+
LSP–
A35(A), A36(B), A37(C)
Airbag Sensor Assembly
SSL+
SSL–
VUPL
ESL
SSR+
SSR–
VUPR
ESR
17 A
20 A
16 A
18 A
16 C
13 C
17 C
15 C
L–W
LG
P–L
GR–L
L–Y
LG
P
GR
3
2
4
1
3
2
4
1
SSL+
SSL–
VUPL
ESL
SSR+
SSR–
VUPR
ESR
S22
Side Airbag Sensor Front LH
S23
Side Airbag Sensor Front RH
W–B
(LHD)
BO

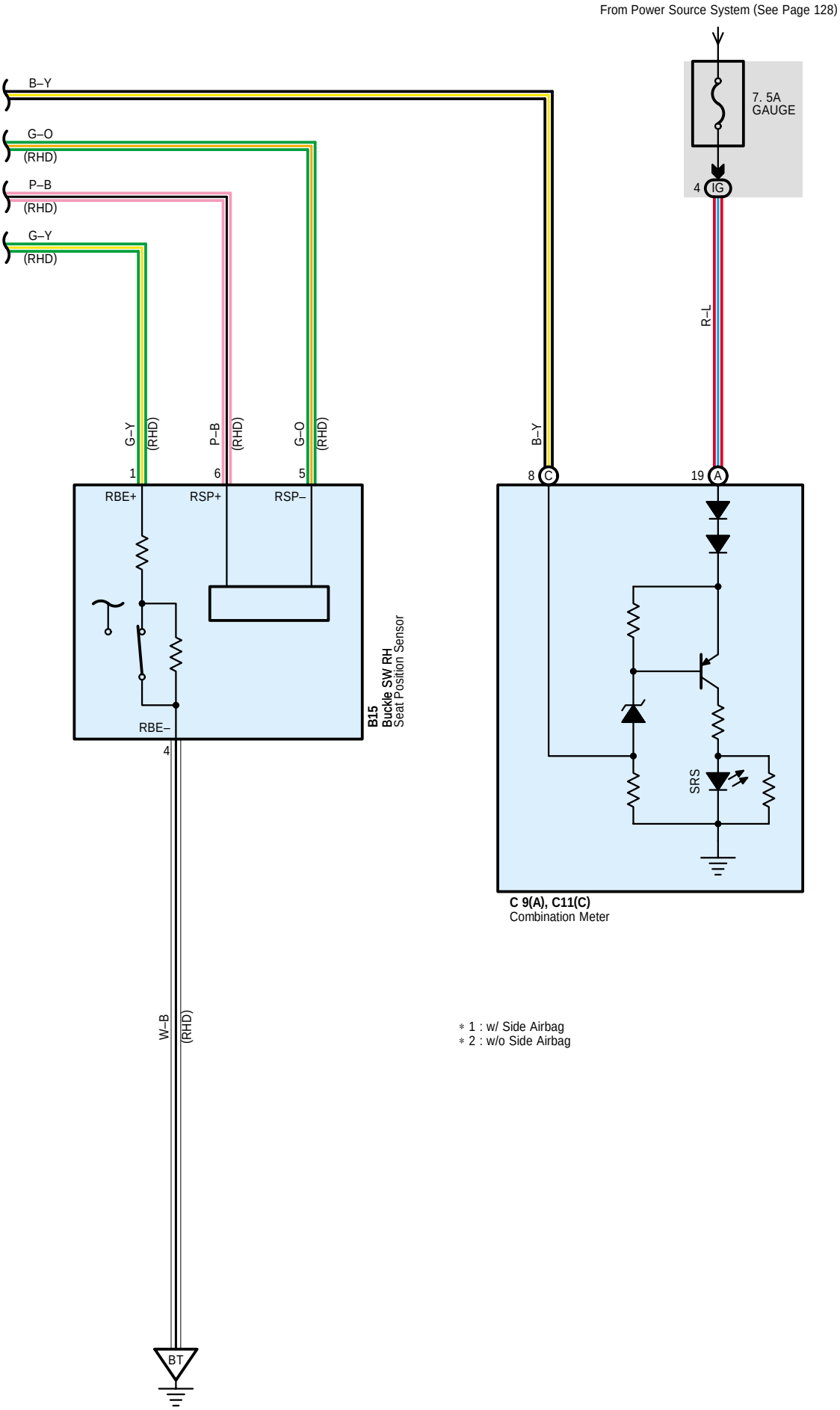
From Power Source System (See Page 128)
7. 5A
GAUGE
4 IG
B–Y
G–O
(RHD)
P–B
(RHD)
G–Y
(RHD)
R–L
G–Y
(RHD)
P–B
(RHD)
G–O
(RHD)
B–Y
1
6
5
8 C
19 A
RBE+
RSP+
RSP–
RBE–
4
B15
Buckle SW RH
Seat Position Sensor
SRS
C 9(A), C11(C)
Combination Meter
W–B
(RHD)
BT
∗ 1 : w/ Side Airbag
∗ 2 : w/o Side Airbag

System Outline

The SRS is a driver and front passenger protection device which has a supplemental role to the seat belts.
When the ignition SW is turned to ON, the current from the SRS fuse flows to TERMINAL (C) 5 of the airbag sensor assembly.
If an accident occurs while driving, when the frontal impact exceeds a set level, the current from the SRS fuse flows to TERMINALS (B) 14, (B) 16, (B) 10, (B) 8, (A) 8 (w/ side airbag) or (A) 2 (w/o side airbag) and (C) 9 (w/ side airbag) or (C) 5 (w/o side airbag) of the airbag sensor assembly to the airbag squibs and the pretensioners to TERMINALS (B) 13, (B) 17, (B) 11, (B) 7, (B) 7 (w/ side airbag) or (A) 1 (w/o side airbag) and (C) 10 (w/ side airbag) or (C) 6 (w/o side airbag) of the airbag sensor assembly to TERMINAL (B) 27, (B) 28 or BODY GROUND to GROUND, so that current flows to the airbag squibs and the pretensioners and causes them to operate.
When the side impact also exceeds a set level, the current from the SRS fuse flows to TERMINALS (A) 12, (C) 5, (A) 9 and (D) 8 of the airbag sensor assembly to the side airbag squibs and the curtain shield airbag squibs TERMINALS (A) 11, (D) 6, (A) 10 and (C) 7 of the airbag sensor assembly to TERMINAL (B) 27, (B) 28 or BODY GROUND to GROUND, causing side airbag squibs and curtain shield airbag squibs to operate.
The airbag stored inside the steering wheel pad is instantaneously expanded to soften the shock to the driver.
The airbag stored inside the passenger's instrument panel is instantaneously expanded to soften the shock to the front passenger.
Side airbags are instantaneously expanded to soften the shock of side to the driver and front passenger.
The curtain shield airbag can ease an impact on the head of the front and rear passengers and reduce risks of injury.
The pretensioners make sure of the seat belt restrainability.

○ : Parts Location

Code	See Page	Code	See Page	Code	See Page
A16	38 (*1)	A39	48 (LHD)	P19	53 (*6)
	40 (*2)		68 (RHD)		55 (*7)
	42 (*3)	B13	56 (*8)		73 (*15)
	44 (*4)		57 (*9)		75 (*16)
	46 (*5)	B15	76 (*17)	S22	53 (*6)
	58 (*10)		77 (*18)		55 (*7)
	60 (*11)	C9 A	49 (LHD)		73 (*15)
	62 (*12)		69 (RHD)		75 (*16)
	64 (*13)	C11 C	49 (LHD)	S23	53 (*6)
	66 (*14)		69 (RHD)		55 (*7)
A17	38 (*1)	C21	52 (*6)		73 (*15)
	40 (*2)		54 (*7)		75 (*16)
	42 (*3)		72 (*15)	S24	53 (*6)
	44 (*4)		74 (*16)		55 (*7)
	46 (*5)	C22	52 (*6)		73 (*15)
	58 (*10)		54 (*7)		75 (*16)
	60 (*11)		72 (*15)	S25	53 (*6)
	62 (*12)		74 (*16)		55 (*7)
	64 (*13)	D6	49 (LHD)		73 (*15)
	66 (*14)		69 (RHD)		75 (*16)
A35 A	48 (LHD)	E10 B	49 (LHD)	S28	56 (*8)
	68 (RHD)		69 (RHD)		57 (*9)
A36 B	48 (LHD)	J14	50 (LHD)		76 (*17)
	68 (RHD)		70 (RHD)		77 (*18)
A37 C	48 (LHD)	P18	53 (*6)	S29	56 (*8)
	68 (RHD)		55 (*7)		57 (*9)
A38	48 (LHD)		73 (*15)		76 (*17)
	68 (RHD)		75 (*16)		77 (*18)

* 1 : LHD 1GR-FE * 2 : LHD 3RZ-FE * 3 : LHD 1KD-FTV * 4 : LHD 1KZ-TE * 5 : LHD 5L-E * 6 : LHD 5-Door * 7 : LHD 3-Door
* 8 : LHD 8Way Power Seat * 9 : LHD Except 8Way Power Seat * 10 : RHD 1GR-FE * 11 : RHD 3RZ-FE * 12 : RHD 1KD-FTV
* 13 : RHD 1KZ-TE * 14 : RHD 5L-E * 15 : RHD 5-Door * 16 : RHD 3-Door * 17 : RHD 8Way Power Seat
* 18 : RHD Except 8Way Power Seat

: **Junction Block and Wire Harness Connector**

Code	See Page	Junction Block and Wire Harness (Connector Location)
IG	27 (LHD)	Instrument Panel Wire and Driver Side J/B (Lower Finish Panel)
	29 (RHD)	
IL	27 (LHD)	
	29 (RHD)	
1C	32 (LHD)	Instrument Panel Wire and J/B No.1 (Instrument Panel Reinforcement Left)
	32 (RHD)	Instrument Panel Wire and J/B No.1 (Instrument Panel Reinforcement Right)
1E	32 (LHD)	Instrument Panel Wire and J/B No.1 (Instrument Panel Reinforcement Left)
	32 (RHD)	Instrument Panel Wire and J/B No.1 (Instrument Panel Reinforcement Right)
2A	34	Instrument Panel Wire and J/B No.2 (Instrument Panel Reinforcement Center)
2B		

: **Connector Joining Wire Harness and Wire Harness**

Code	See Page	Joining Wire Harness and Wire Harness (Connector Location)
IC1	88 (LHD)	Instrument Panel Wire and Engine Room Main Wire (Left Kick Panel)
	112 (RHD)	
IM3	92 (LHD)	Instrument Panel Wire and Engine Room Main Wire (Right Kick Panel)
	116 (RHD)	

: **Ground Points**

Code	See Page	Ground Points Location
IK	88 (LHD)	Near the Left Side of Steering Column
	112 (RHD)	Near the Right Side of Steering Column
IM	88 (LHD)	Instrument Panel Brace LH
	112 (RHD)	Instrument Panel Brace RH
BO	96 (*6)	Under the Driver's Seat
	100 (*7)	
BT	120 (*15)	Right Quarter Panel Inner
	124 (*16)	

* 1 : LHD 1GR-FE * 2 : LHD 3RZ-FE * 3 : LHD 1KD-FTV * 4 : LHD 1KZ-TE * 5 : LHD 5L-E * 6 : LHD 5-Door * 7 : LHD 3-Door
* 8 : LHD 8Way Power Seat * 9 : LHD Except 8Way Power Seat * 10 : RHD 1GR-FE * 11 : RHD 3RZ-FE * 12 : RHD 1KD-FTV
* 13 : RHD 1KZ-TE * 14 : RHD 5L-E * 15 : RHD 5-Door * 16 : RHD 3-Door * 17 : RHD 8Way Power Seat
* 18 : RHD Except 8Way Power Seat

VSC (LHD A/T)

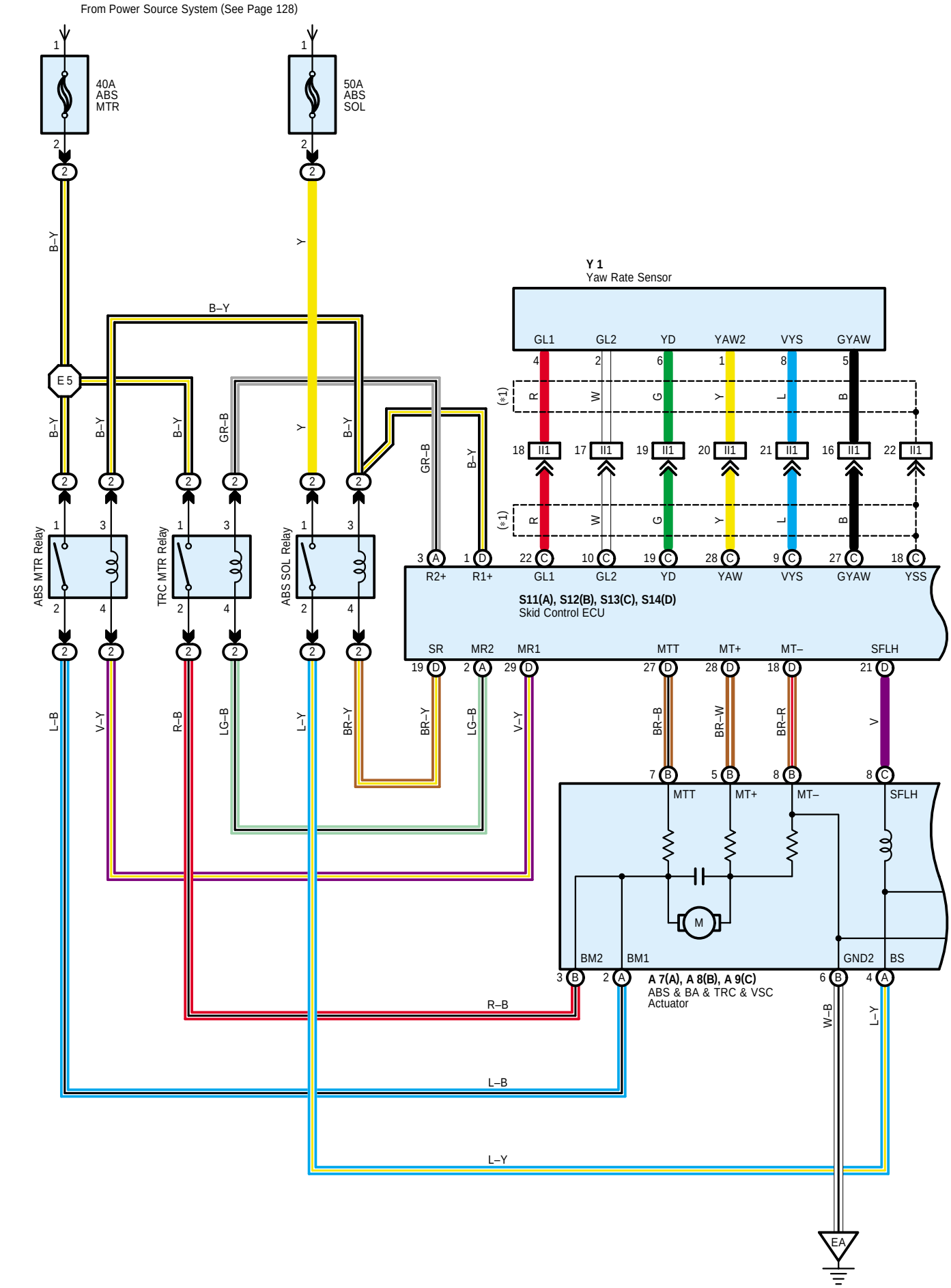
From Power Source System (See Page 128)
40A ABS MTR
50A ABS SOL
E 5
ABS MTR Relay
TRC MTR Relay
ABS SOL Relay
Y 1
Yaw Rate Sensor
GL1
GL2
YD
YAW2
VYS
GYAW
R2+
R1+
YAW
YSS
S11(A), S12(B), S13(C), S14(D)
Skid Control ECU
SR
MR2
MR1
MTT
MT+
MT–
SFLH
BM2
BM1
GND2
BS
A 7(A), A 8(B), A 9(C)
ABS & BA & TRC & VSC
Actuator
EA

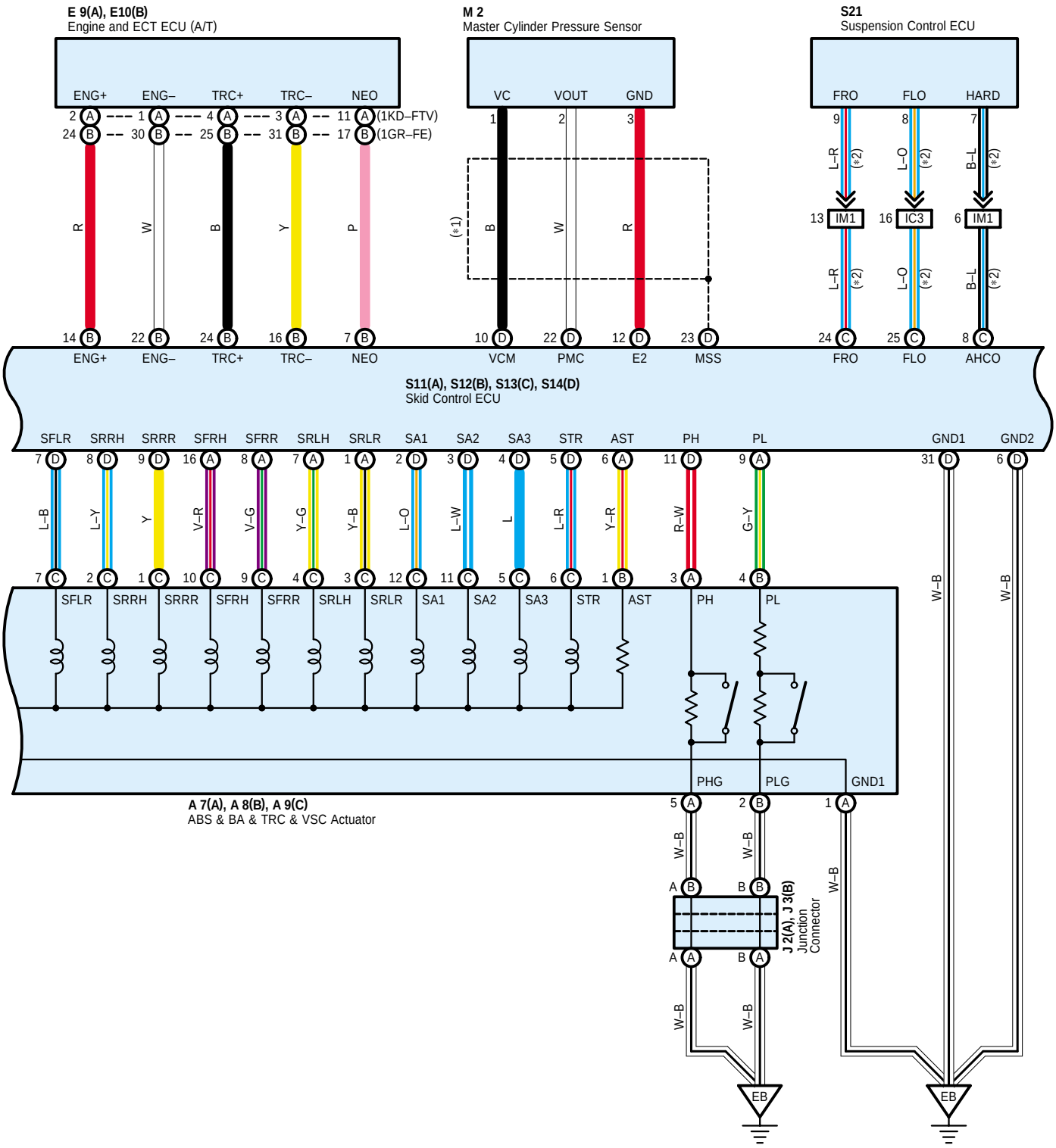
∗ 1 : Shielded
∗ 2 : 5–Door
E 9(A), E10(B)
Engine and ECT ECU (A/T)
ENG+
ENG–
TRC+
TRC–
NEO
(1KD–FTV)
(1GR–FE)
M 2
Master Cylinder Pressure Sensor
VC
VOUT
GND
S21
Suspension Control ECU
FRO
FLO
HARD
IM1
IC3
S11(A), S12(B), S13(C), S14(D)
Skid Control ECU
VCM
PMC
E2
MSS
AHCO
SFLR
SRRH
SRRR
SFRH
SFRR
SRLH
SRLR
SA1
SA2
SA3
STR
AST
PH
PL
GND1
GND2
PHG
PLG
A 7(A), A 8(B), A 9(C)
ABS & BA & TRC & VSC Actuator
J 2(A), J 3(B)
Junction Connector
EB

VSC (LHD A/T)

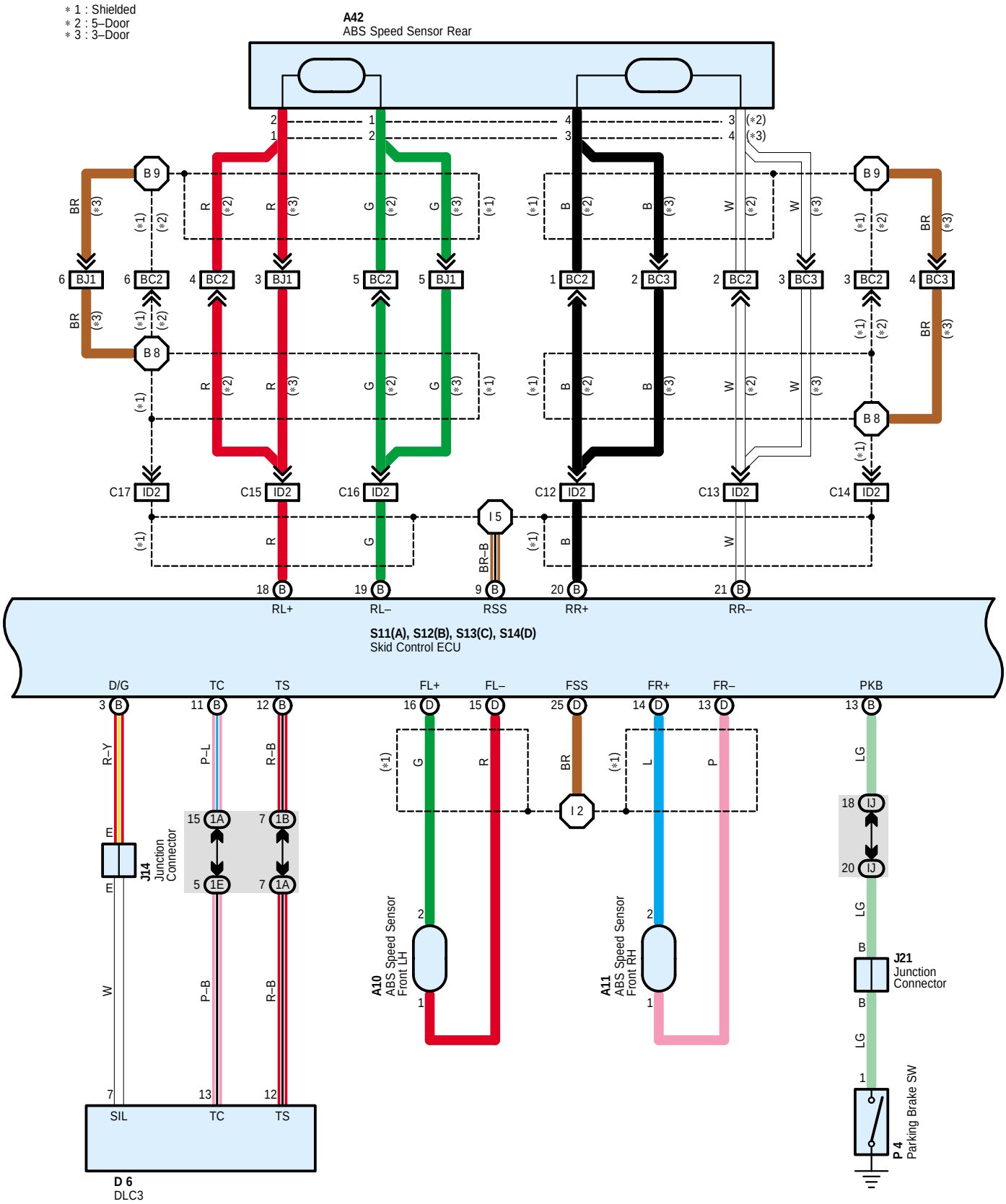
* 1 : Shielded
* 2 : 5–Door
* 3 : 3–Door
A42
ABS Speed Sensor Rear
B 9
B 8
BJ1
BC2
BC3
ID2
I 5
I 2
C17
C15
C16
C12
C13
C14
RL+
RL–
RSS
RR+
RR–
S11(A), S12(B), S13(C), S14(D)
Skid Control ECU
D/G
TC
TS
FL+
FL–
FSS
FR+
FR–
PKB
J14
Junction
Connector
A10
ABS Speed Sensor
Front LH
A11
ABS Speed Sensor
Front RH
IJ
J21
Junction
Connector
P 4
Parking Brake SW
SIL
TC
TS
D 6
DLC3

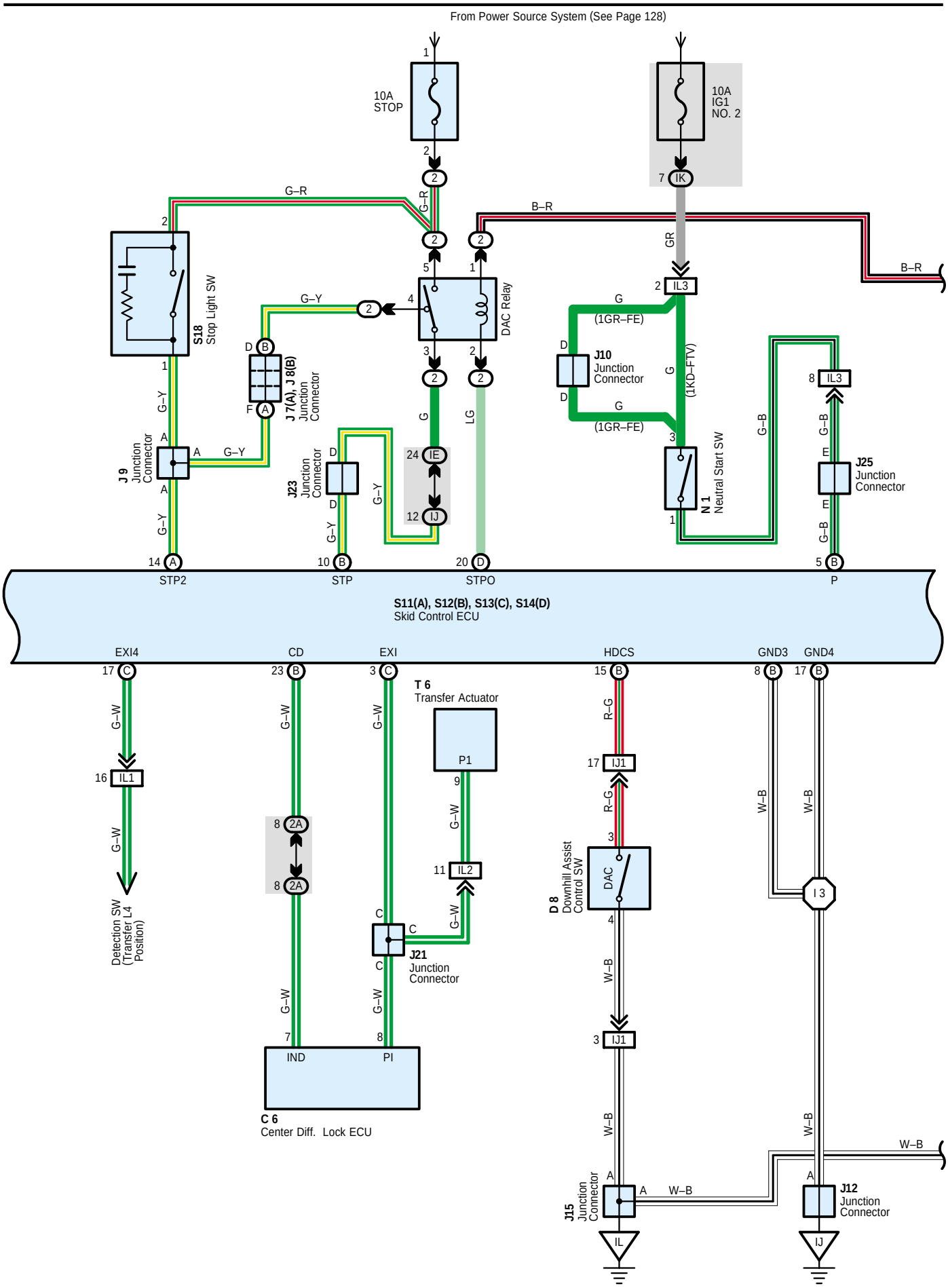
From Power Source System (See Page 128)
10A
STOP
10A
IG1
NO. 2
S18
Stop Light SW
DAC Relay
J 7(A), J 8(B)
Junction
Connector
J 9
Junction
Connector
J23
Junction
Connector
J10
Junction
Connector
N 1
Neutral Start SW
J25
Junction
Connector
STP2
STP
STPO
P
S11(A), S12(B), S13(C), S14(D)
Skid Control ECU
EXI4
CD
EXI
HDCS
GND3
GND4
Detection SW
(Transfer L4
Position)
T 6
Transfer Actuator
J21
Junction
Connector
C 6
Center Diff. Lock ECU
IND
PI
D 8
Downhill Assist
Control SW
DAC
J15
Junction
Connector
J12
Junction
Connector
(1GR–FE)
(1KD–FTV)

VSC (LHD A/T)

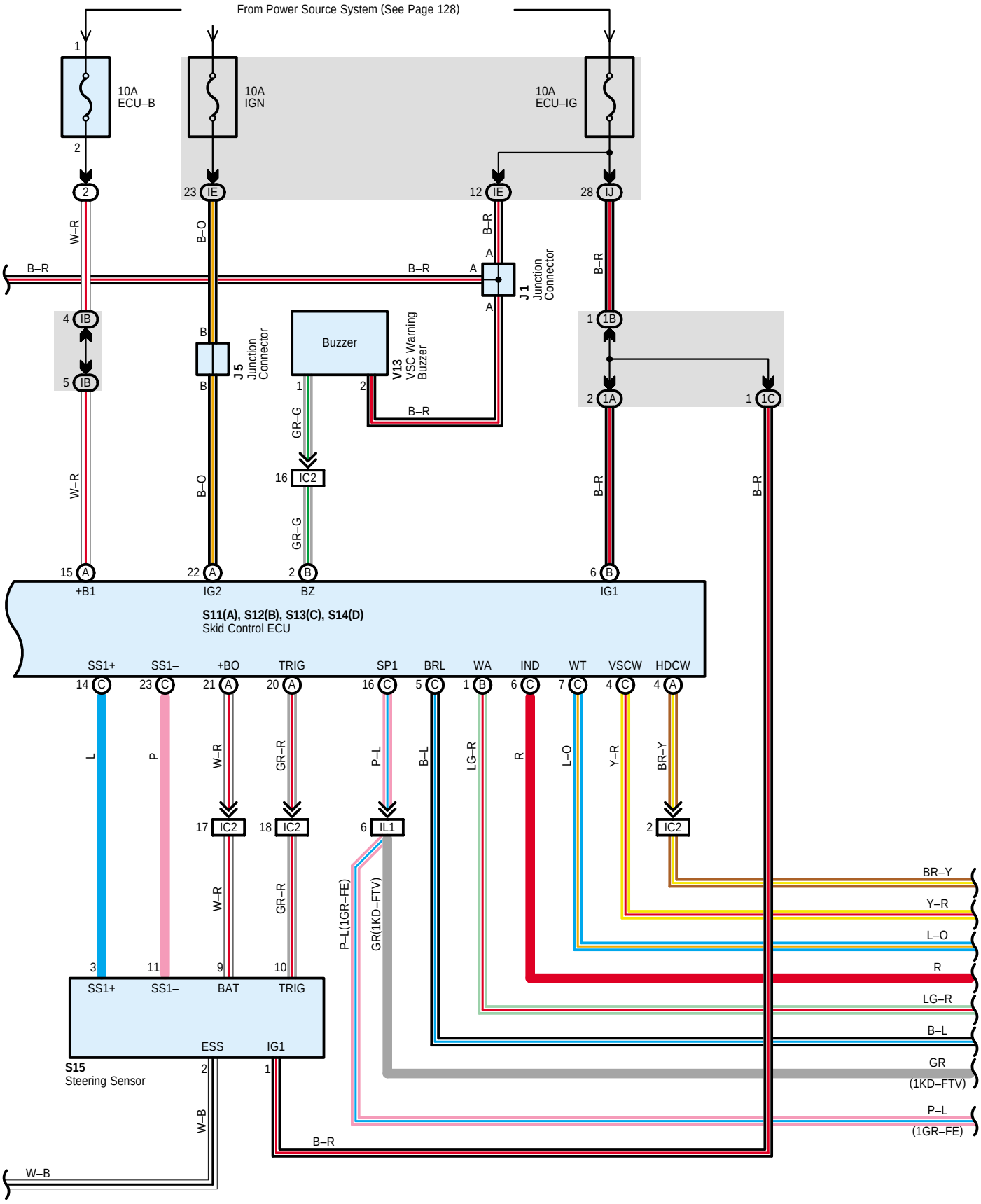
From Power Source System (See Page 128)
10A ECU–B
10A IGN
10A ECU–IG
J 1 Junction Connector
J 5 Junction Connector
Buzzer
V13 VSC Warning Buzzer
IC2
IL1
S11(A), S12(B), S13(C), S14(D)
Skid Control ECU
+B1
IG2
BZ
IG1
SS1+
SS1–
+BO
TRIG
SP1
BRL
WA
IND
WT
VSCW
HDCW
S15
Steering Sensor
BAT
ESS
BR–Y
Y–R
L–O
R
LG–R
B–L
GR (1KD–FTV)
P–L (1GR–FE)
W–B
B–R

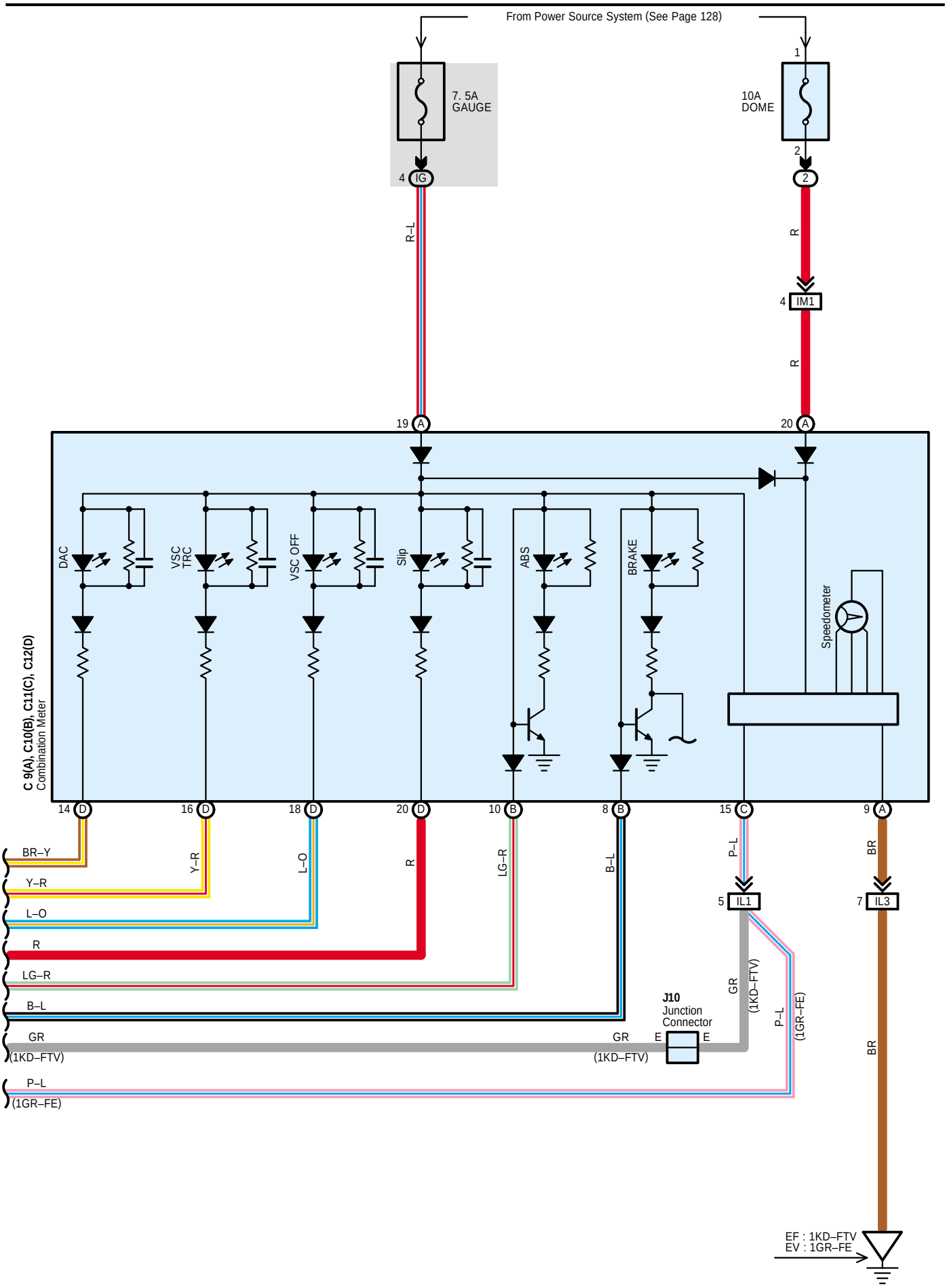
From Power Source System (See Page 128)
7. 5A
GAUGE
10A
DOME
1
2
4 IG
2
R–L
R
4 IM1
R
19 A
20 A
DAC
VSC
TRC
VSC OFF
Slip
ABS
BRAKE
Speedometer
C 9(A), C10(B), C11(C), C12(D)
Combination Meter
14 D
16 D
18 D
20 D
10 B
8 B
15 C
9 A
BR–Y
Y–R
L–O
R
LG–R
B–L
GR
(1KD–FTV)
P–L
(1GR–FE)
Y–R
L–O
R
LG–R
B–L
P–L
BR
5 IL1
7 IL3
GR
(1KD–FTV)
P–L
(1GR–FE)
BR
J10
Junction
Connector
GR
(1KD–FTV)
E
E
EF : 1KD–FTV
EV : 1GR–FE

System Outline

1. Normal Operation

The VSC system helps prevent the vehicle from slipping sideways as a result of strong front wheel skid or strong rear wheel skid during cornering.
The followings are two examples that can be considered as circumstances in which the tires exceed their lateral grip limit. The VSC system is designed to help control the vehicle behavior by controlling the engine's output and the brakes at each wheel when the vehicle is under one of the conditions indicated below.

* When the front wheels lose grip in relation to the rear wheels (Strong front wheel skid tendency).
* When the rear wheels lose grip in relation to the front wheels (Strong rear wheel skid tendency).

2. Downhill Assist Control Operation

The downhill assist control operation controls braking action of each wheel to help prevent out-of-balance vehicle posture when descending a steep hill or traveling at a speed exceeding the threshold of wheel gripping capability. When the downhill assist control is in operation, the brake system controls vehicle speed within the range of 5 to 7 km/h.
For the downhill assist control to be operative all of the following conditions have to be met:

* Downhill assist control switch = ON
* Transfer L4 selected
* Vehicle speed is 5 km/h or more, but less than 25 km/h.
* Accelerator pedal OFF
* Brake pedal OFF

3. Hill-Start Support Control Operation

When starting on a steep hill for ascending, the hill-start support control automatically puts the brake on momentarily - from the moment when the driver releases his foot from the brake pedal until he steps on the accelerator pedal - to help the driver start the vehicle safely and smoothly.
Please bear in mind, however, that it activates the brake system for only 3 seconds.
For the hill-start support control to be operative all of the following conditions have to be met:

* Shift position = D, 2, or L
* Vehicle not moving forward with some wheel(s) slipping
* Vehicle speed > 0 km/h

Service Hints

S11 (A), S12 (B), S14 (D) Skid Control ECU

(D) 6, (D) 31, (B) 8, (B) 17-Ground : Always continuity
(B) 6, (A) 22-Ground : Approx. 12 volts with the ignition SW at ON position
(A) 15-Ground : Always approx. 12 volts

: Parts Location

Code		See Page	Code		See Page	Code		See Page
A7	A	38 (*1)	E9	A	49 (LHD)	J25		50 (LHD)
		42 (*3)	E10	B	49 (LHD)	M2		39 (*1)
A8	B	38 (*1)	J1		39 (*1)			43 (*3)
		42 (*3)			43 (*3)	N1		39 (*1)
A9	C	38 (*1)	J2	A	39 (*1)			43 (*3)
		42 (*3)			43 (*3)	P4		51 (LHD)
A10		38 (*1)	J3	B	39 (*1)	S11	A	51 (LHD)
		42 (*3)			43 (*3)	S12	B	51 (LHD)
A11		38 (*1)	J5		39 (*1)	S13	C	51 (LHD)
		42 (*3)			43 (*3)	S14	D	51 (LHD)
A42		52 (*6)	J7	A	50 (LHD)	S15		51 (LHD)
		54 (*7)	J8	B	50 (LHD)	S18		51 (LHD)
C6		49 (LHD)	J9		50 (LHD)	S21		51 (LHD)
C9	A	49 (LHD)	J10		50 (LHD)	T6		39 (*1)
C10	B	49 (LHD)	J12		50 (LHD)			43 (*3)
C11	C	49 (LHD)	J14		50 (LHD)	V13		51 (LHD)
C12	D	49 (LHD)	J15		50 (LHD)	Y1		51 (LHD)
D6		49 (LHD)	J21		50 (LHD)			
D8		49 (LHD)	J23		50 (LHD)			

: Relay Blocks

Code	See Page	Relay Blocks (Relay Block Location)
2	23	Engine Room R/B (Engine Compartment Left)

: Junction Block and Wire Harness Connector

Code	See Page	Junction Block and Wire Harness (Connector Location)
IB	26 (LHD)	Engine Room Main Wire and Driver Side J/B (Lower Finish Panel)
IE		
IG	27 (LHD)	Instrument Panel Wire and Driver Side J/B (Lower Finish Panel)
IJ		
IK		
1A	32 (LHD)	Instrument Panel Wire and J/B No.1 (Instrument Panel Reinforcement Left)
1B		
1C		
1E		
2A	34	Instrument Panel Wire and J/B No.2 (Instrument Panel Reinforcement Center)

* 1 : LHD 1GR-FE * 2 : LHD 3RZ-FE * 3 : LHD 1KD-FTV * 4 : LHD 1KZ-TE * 5 : LHD 5L-E * 6 : LHD 5-Door * 7 : LHD 3-Door
* 8 : LHD 8Way Power Seat * 9 : LHD Except 8Way Power Seat * 10 : RHD 1GR-FE * 11 : RHD 3RZ-FE * 12 : RHD 1KD-FTV
* 13 : RHD 1KZ-TE * 14 : RHD 5L-E * 15 : RHD 5-Door * 16 : RHD 3-Door * 17 : RHD 8Way Power Seat
* 18 : RHD Except 8Way Power Seat

: Connector Joining Wire Harness and Wire Harness

Code	See Page	Joining Wire Harness and Wire Harness (Connector Location)
IC2	88 (LHD)	Instrument Panel Wire and Engine Room Main Wire (Left Kick Panel)
IC3		
ID2	90 (LHD)	Instrument Panel Wire and Floor No.2 Wire (Left Kick Panel)
II1	90 (LHD)	Console Box Wire and Instrument Panel Wire (Under the Instrument Panel Brace LH)
IJ1	92 (LHD)	Instrument Panel Wire and Switch Wire (Front Side of the Console Box)
IL1	92 (LHD)	Engine Wire and Instrument Panel Wire (Right Side of the Blower Unit)
IL2		
IL3		
IM1	92 (LHD)	Instrument Panel Wire and Engine Room Main Wire (Right Kick Panel)
BC2	96 (*6)	Frame Wire and Floor No.2 Wire (Under the Left Side of Rear Seat Cushion)
BC3	100 (*7)	Floor No.2 Wire and Frame Wire (Frame Side Rail LH)
BJ1		

: Ground Points

Code	See Page	Ground Points Location
EA	78 (*1)	Front Right Fender
	82 (*3)	
EB	78 (*1)	Front Left Fender
	82 (*3)	
EF	82 (*3)	Rear Part of Cylinder Block
EV	78 (*1)	Rear Side of Left Bank Cylinder Block
IJ	88 (LHD)	Left Kick Panel
IL	88 (LHD)	Near the Right Side of Steering Column

: Splice Points

Code	See Page	Wire Harness with Splice Points	Code	See Page	Wire Harness with Splice Points
E5	78 (*1)	Engine Room Main Wire	I5	90 (LHD)	Instrument Panel Wire
	82 (*3)		B8	100 (*7)	Floor No.2 Wire
I2	90 (LHD)		B9	100 (*7)	Frame Wire
I3	90 (LHD)	Instrument Panel Wire			

* 1 : LHD 1GR-FE * 2 : LHD 3RZ-FE * 3 : LHD 1KD-FTV * 4 : LHD 1KZ-TE * 5 : LHD 5L-E * 6 : LHD 5-Door * 7 : LHD 3-Door
* 8 : LHD 8Way Power Seat * 9 : LHD Except 8Way Power Seat * 10 : RHD 1GR-FE * 11 : RHD 3RZ-FE * 12 : RHD 1KD-FTV
* 13 : RHD 1KZ-TE * 14 : RHD 5L-E * 15 : RHD 5-Door * 16 : RHD 3-Door * 17 : RHD 8Way Power Seat
* 18 : RHD Except 8Way Power Seat

VSC (LHD M/T)

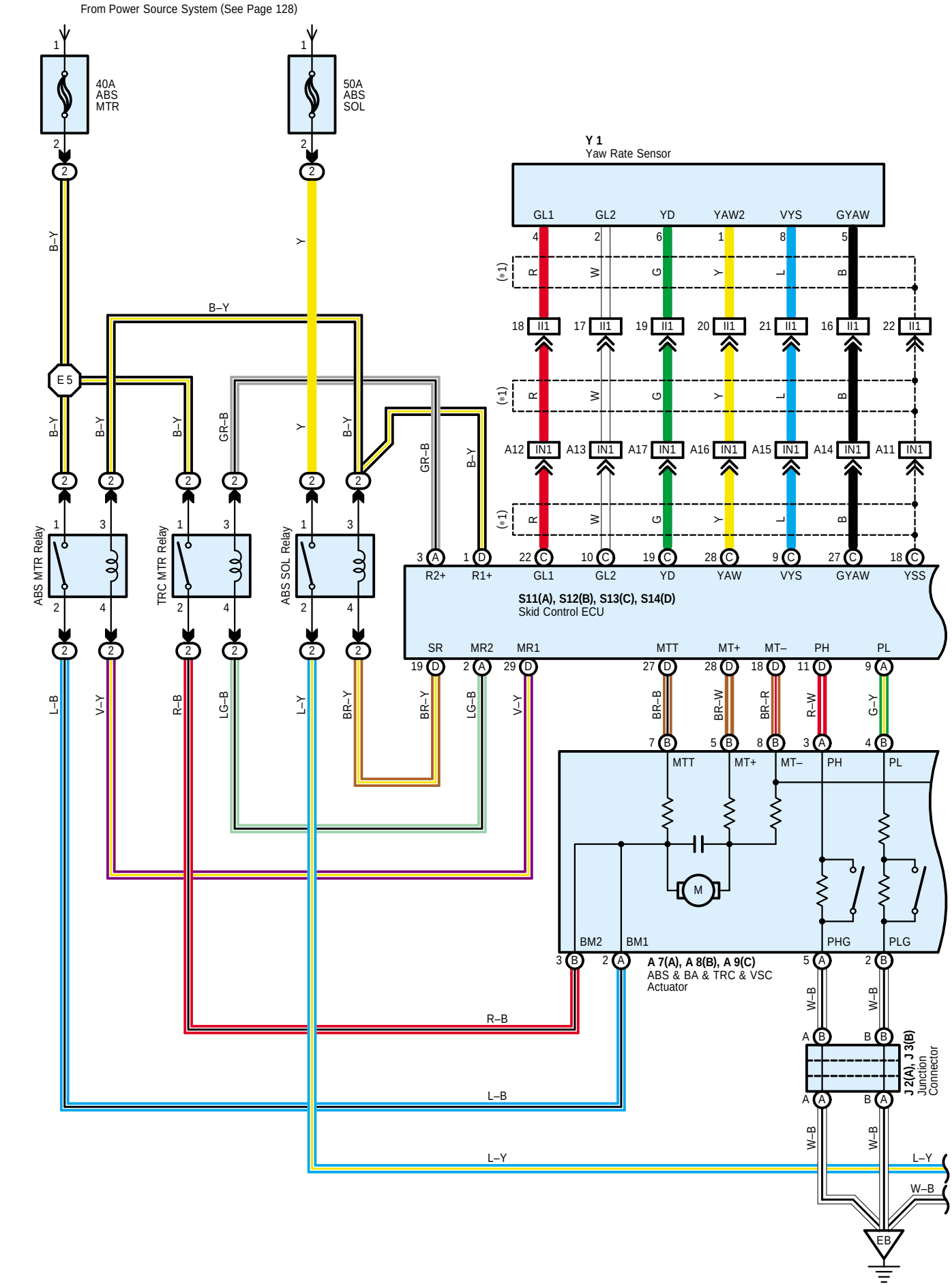
From Power Source System (See Page 128)
40A ABS MTR
50A ABS SOL
Y 1
Yaw Rate Sensor
GL1
GL2
YD
YAW2
VYS
GYAW
E 5
ABS MTR Relay
TRC MTR Relay
ABS SOL Relay
R2+
R1+
GL1
GL2
YD
YAW
VYS
GYAW
YSS
S11(A), S12(B), S13(C), S14(D)
Skid Control ECU
SR
MR2
MR1
MTT
MT+
MT–
PH
PL
BM2
BM1
PHG
PLG
A 7(A), A 8(B), A 9(C)
ABS & BA & TRC & VSC
Actuator
J 2(A), J 3(B)
Junction
Connector
EB

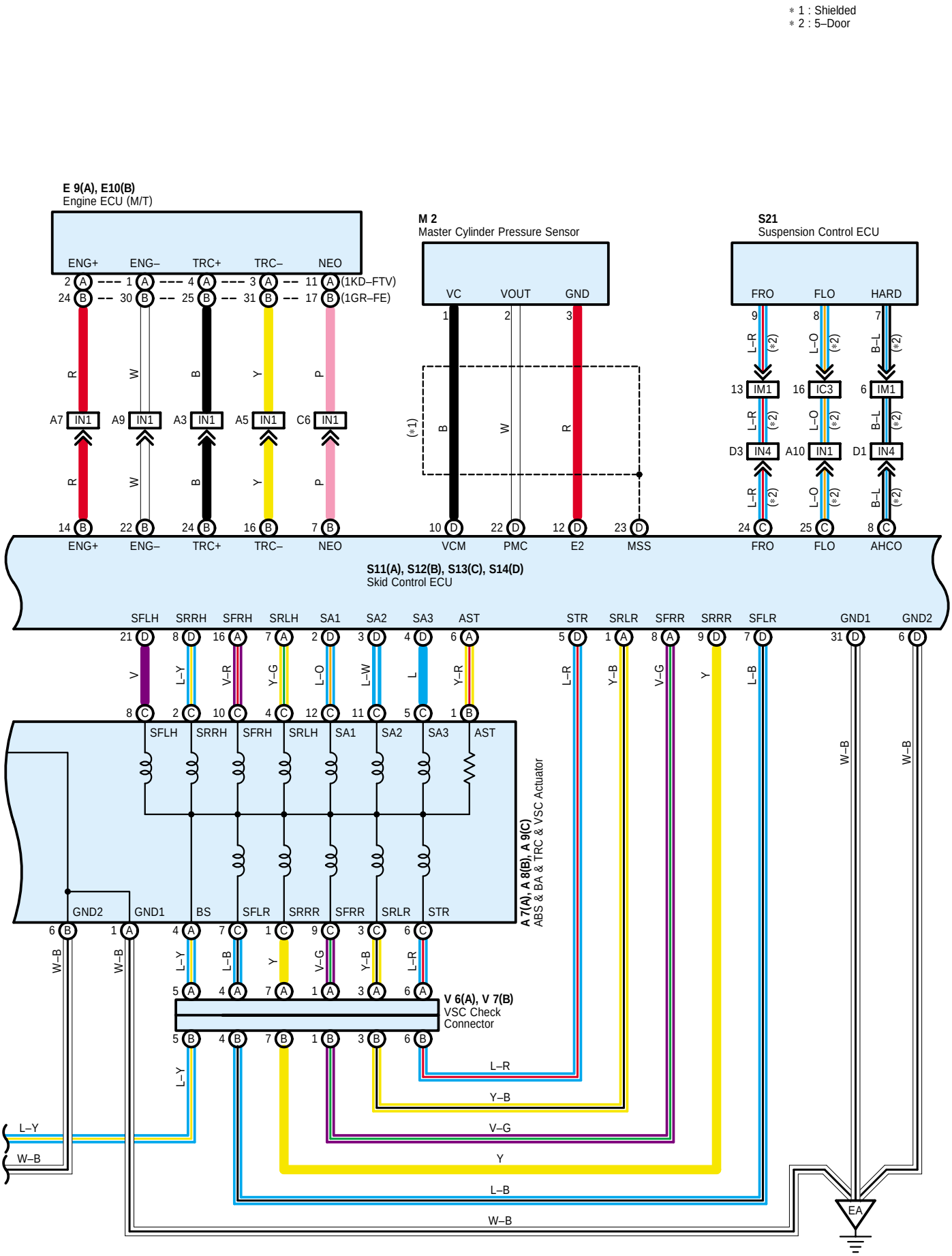
* 1 : Shielded
* 2 : 5–Door
E 9(A), E10(B)
Engine ECU (M/T)
ENG+
ENG–
TRC+
TRC–
NEO
(1KD–FTV)
(1GR–FE)
M 2
Master Cylinder Pressure Sensor
VC
VOUT
GND
S21
Suspension Control ECU
FRO
FLO
HARD
IN1
IC3
IM1
IN4
VCM
PMC
E2
MSS
AHCO
S11(A), S12(B), S13(C), S14(D)
Skid Control ECU
SFLH
SRRH
SFRH
SRLH
SA1
SA2
SA3
AST
STR
SRLR
SFRR
SRRR
SFLR
GND1
GND2
BS
A 7(A), A 8(B), A 9(C)
ABS & BA & TRC & VSC Actuator
V 6(A), V 7(B)
VSC Check
Connector
EA

VSC (LHD M/T)

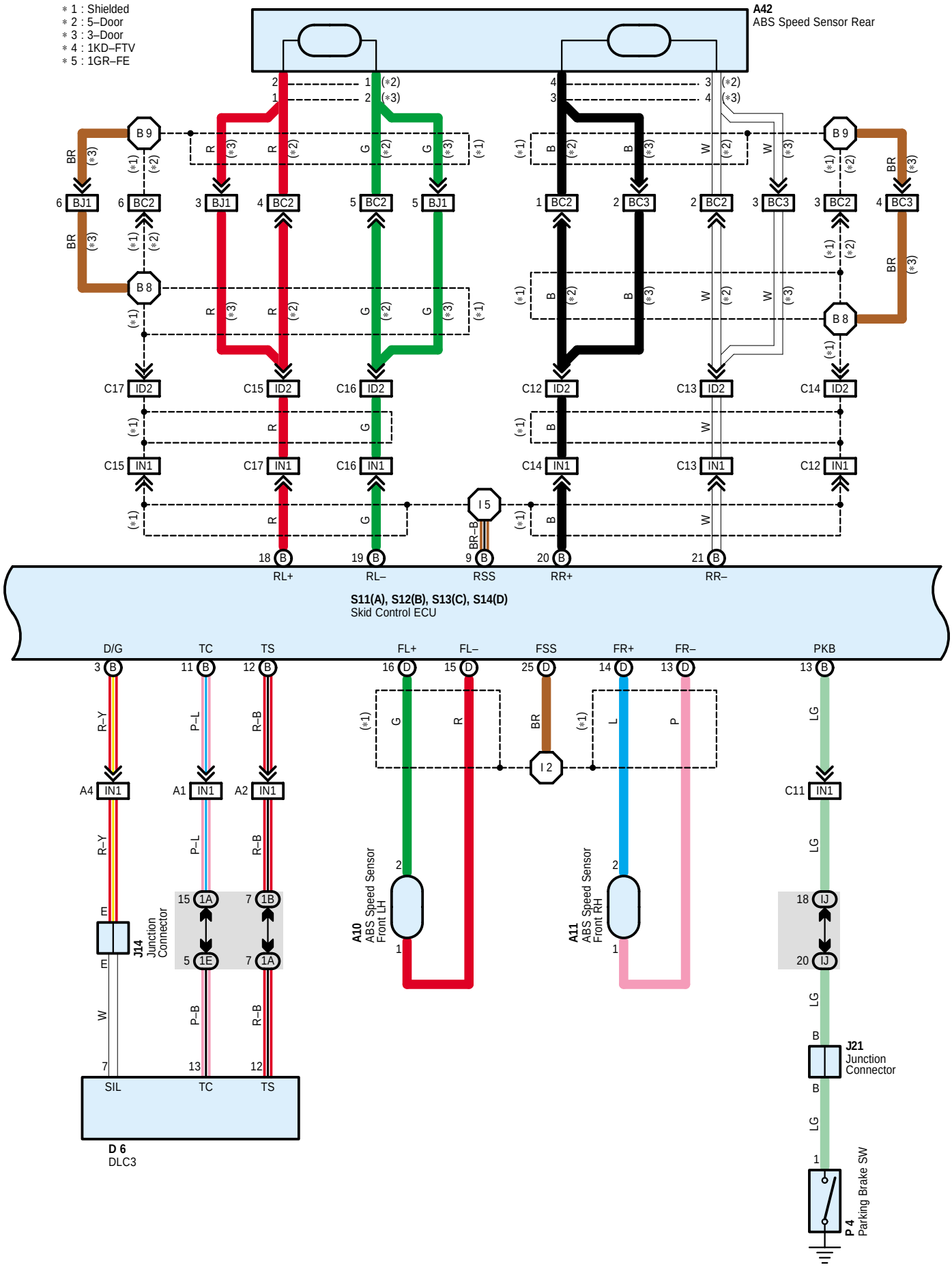
∗1 : Shielded
∗2 : 5–Door
∗3 : 3–Door
∗4 : 1KD–FTV
∗5 : 1GR–FE
A42
ABS Speed Sensor Rear
B 9
B 8
BJ1
BC2
BC3
ID2
IN1
I 5
I 2
RL+
RL–
RSS
RR+
RR–
S11(A), S12(B), S13(C), S14(D)
Skid Control ECU
D/G
TC
TS
FL+
FL–
FSS
FR+
FR–
PKB
A10
ABS Speed Sensor
Front LH
A11
ABS Speed Sensor
Front RH
J14
Junction
Connector
J21
Junction
Connector
SIL
D 6
DLC3
P 4
Parking Brake SW

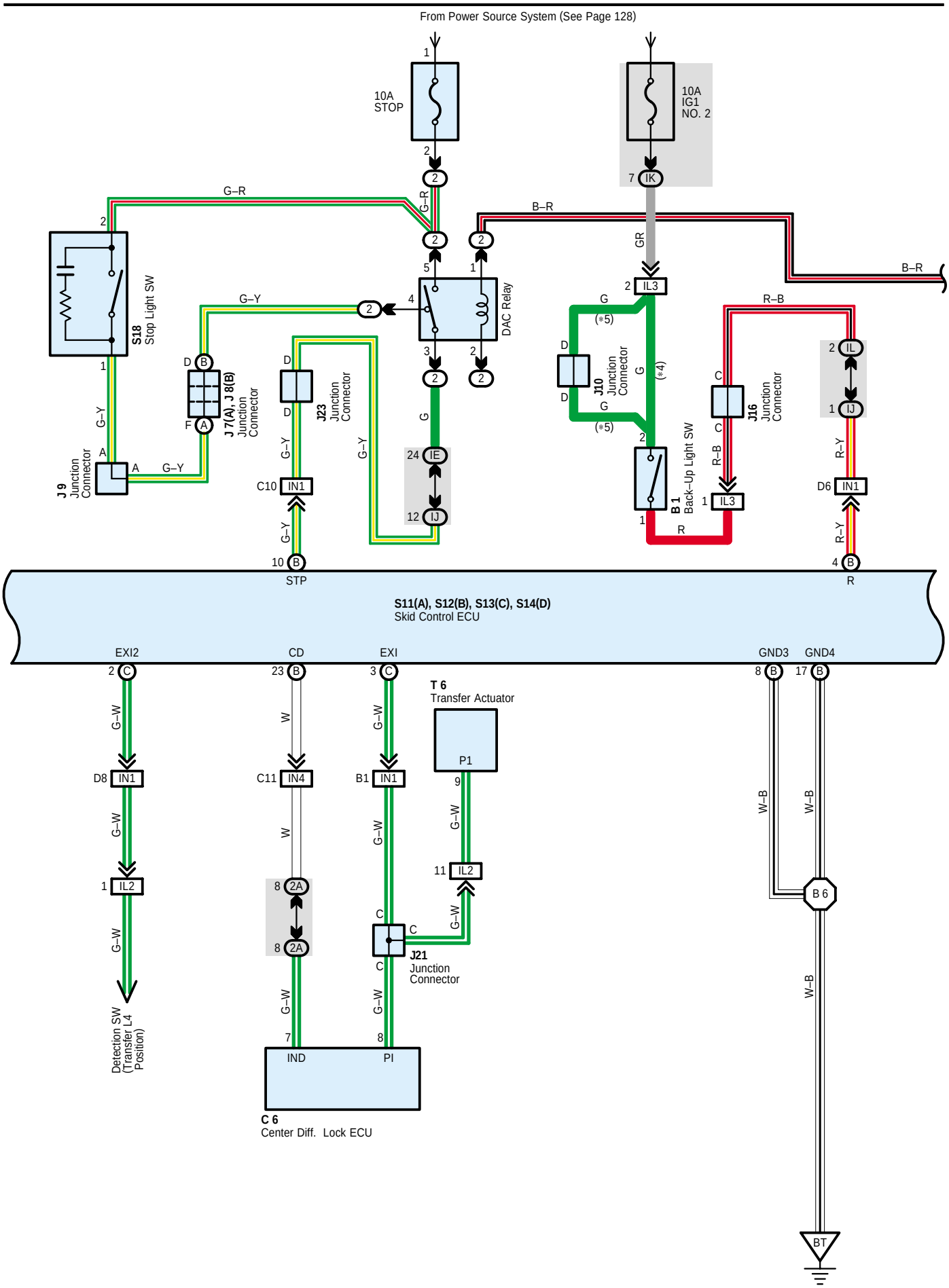
From Power Source System (See Page 128)
10A
STOP
10A
IG1
NO. 2
G–R
B–R
GR
G–Y
R–B
R–Y
G–W
W–B
S18
Stop Light SW
DAC Relay
J 7(A), J 8(B)
Junction
Connector
J23
Junction
Connector
J10
Junction
Connector
J16
Junction
Connector
J 9
Junction
Connector
B 1
Back–Up Light SW
(*5)
(*4)
STP
S11(A), S12(B), S13(C), S14(D)
Skid Control ECU
EXI2
CD
EXI
GND3
GND4
T 6
Transfer Actuator
J21
Junction
Connector
Detection SW
(Transfer L4
Position)
IND
PI
C 6
Center Diff. Lock ECU
B 6
BT

VSC (LHD M/T)

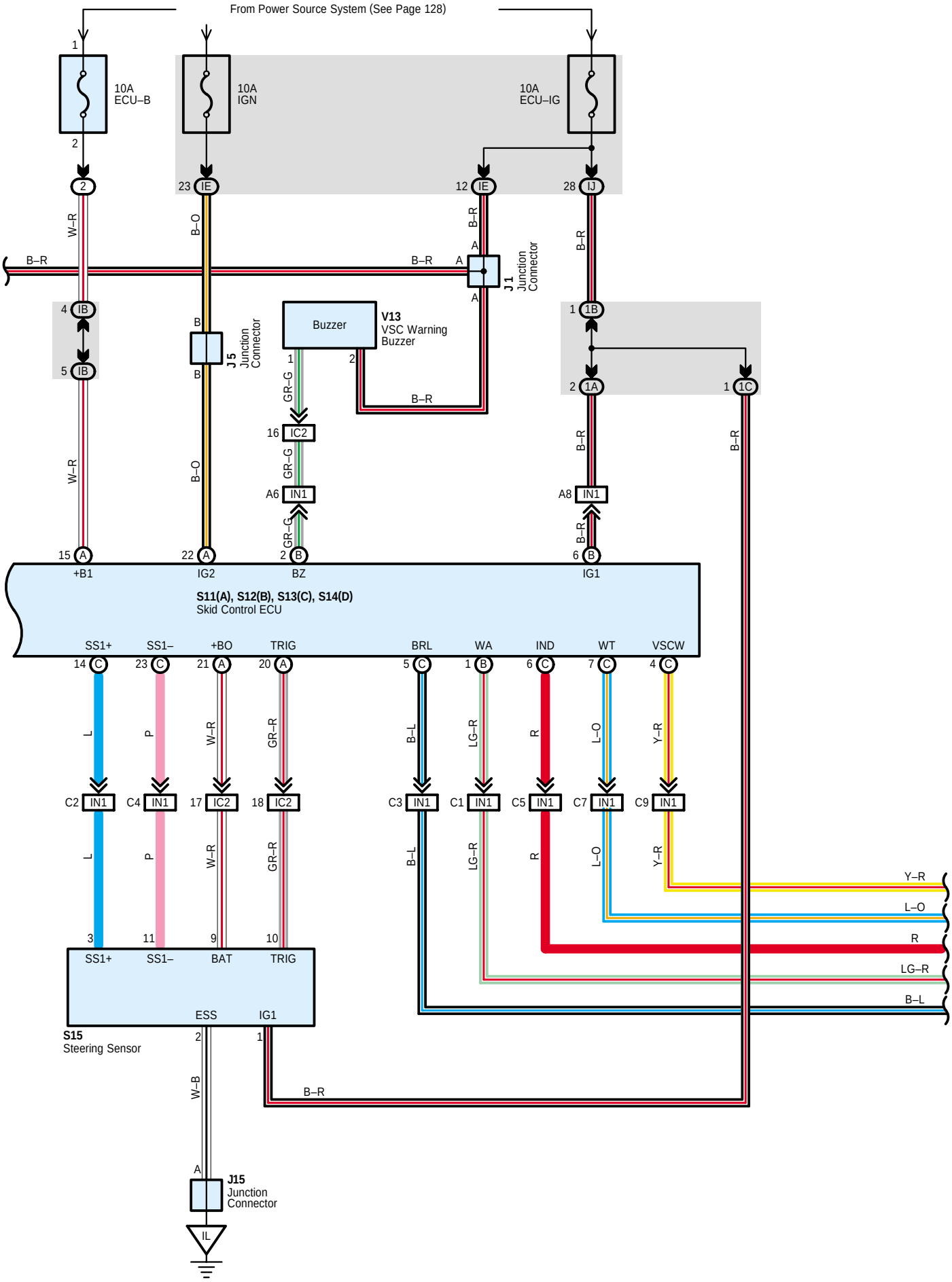
From Power Source System (See Page 128)
10A ECU–B
10A IGN
10A ECU–IG
J1 Junction Connector
J5 Junction Connector
Buzzer
V13 VSC Warning Buzzer
S11(A), S12(B), S13(C), S14(D) Skid Control ECU
+B1
IG2
BZ
IG1
SS1+
SS1–
+BO
TRIG
BRL
WA
IND
WT
VSCW
S15 Steering Sensor
SS1+
SS1–
BAT
TRIG
ESS
IG1
J15 Junction Connector
IL

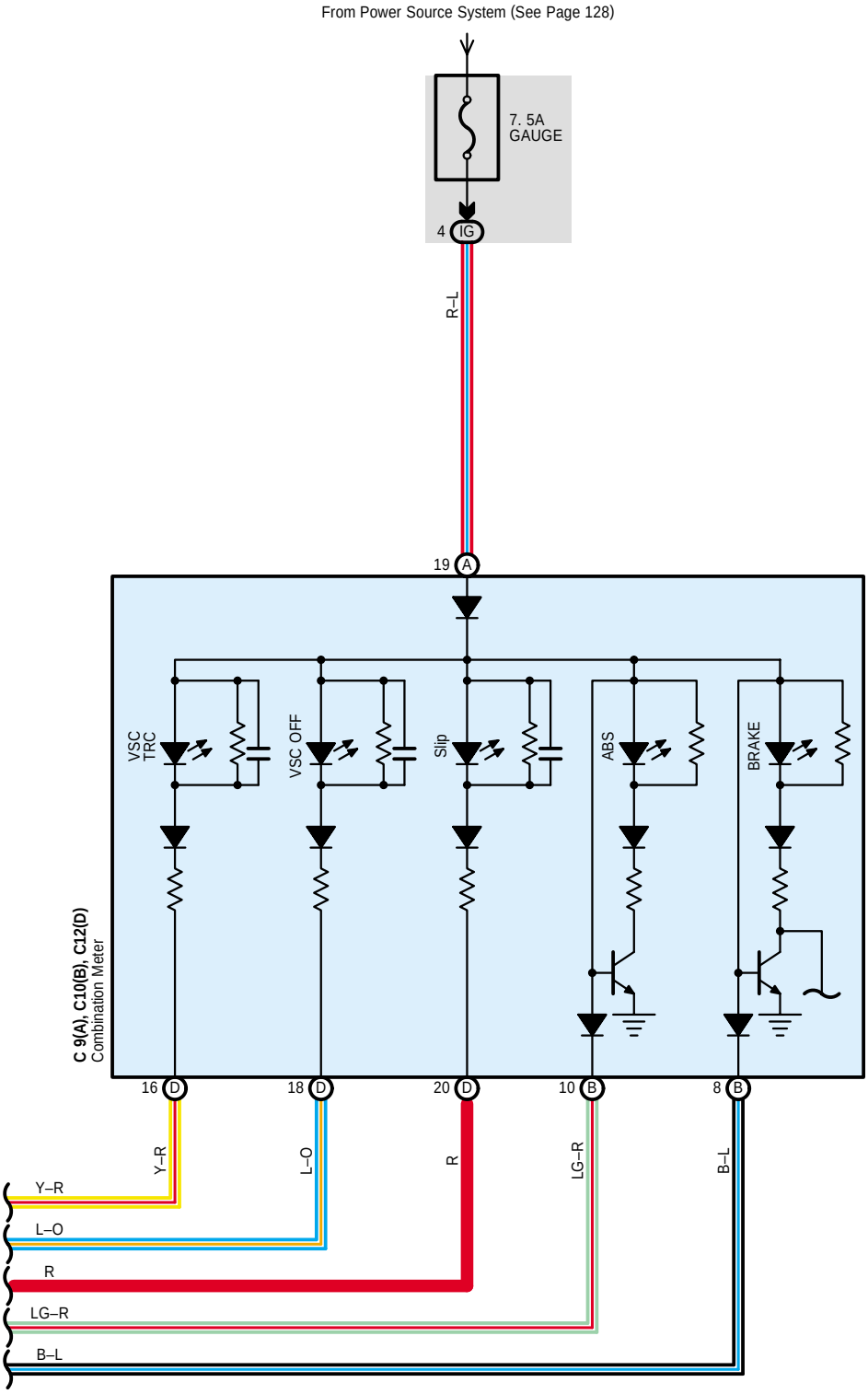
From Power Source System (See Page 128)
7. 5A
GAUGE
4 IG
R–L
19 A
VSC
TRC
VSC OFF
Slip
ABS
BRAKE
C 9(A), C10(B), C12(D)
Combination Meter
16 D
18 D
20 D
10 B
8 B
Y–R
L–O
R
LG–R
B–L
Y–R
L–O
R
LG–R
B–L

System Outline

1. Normal Operation

The VSC system helps prevent the vehicle from slipping sideways as a result of strong front wheel skid or strong rear wheel skid during cornering.
The followings are two examples that can be considered as circumstances in which the tires exceed their lateral grip limit. The VSC system is designed to help control the vehicle behavior by controlling the engine's output and the brakes at each wheel when the vehicle is under one of the conditions indicated below.

* When the front wheels lose grip in relation to the rear wheels (Strong front wheel skid tendency).
* When the rear wheels lose grip in relation to the front wheels (Strong rear wheel skid tendency).

2. Downhill Assist Control Operation

The downhill assist control operation controls braking action of each wheel to help prevent out-of-balance vehicle posture when descending a steep hill or traveling at a speed exceeding the threshold of wheel gripping capability. When the downhill assist control is in operation, the brake system controls vehicle speed within the range of 5 to 7 km/h.
For the downhill assist control to be operative all of the following conditions have to be met:

* Downhill assist control switch = ON
* Transfer L4 selected
* Vehicle speed is 5 km/h or more, but less than 25 km/h.
* Accelerator pedal OFF
* Brake pedal OFF

3. Hill-Start Support Control Operation

When starting on a steep hill for ascending, the hill-start support control automatically puts the brake on momentarily - from the moment when the driver releases his foot from the brake pedal until he steps on the accelerator pedal - to help the driver start the vehicle safely and smoothly.
Please bear in mind, however, that it activates the brake system for only 3 seconds.
For the hill-start support control to be operative all of the following conditions have to be met:

* Shift position = D, 2, or L
* Vehicle not moving forward with some wheel(s) slipping
* Vehicle speed > 0 km/h

Service Hints

S11 (A), S12 (B), S14 (D) Skid Control ECU

(D) 6, (D) 31, (B) 8, (B) 17-Ground : Always continuity
(B) 6, (A) 22-Ground : Approx. 12 volts with the ignition SW at ON position
(A) 15-Ground : Always approx. 12 volts

: Parts Location

Code		See Page	Code		See Page	Code		See Page
A7	A	38 (*1)	E9	A	49 (LHD)	M2		39 (*1)
		42 (*3)	E10	B	49 (LHD)			43 (*3)
A8	B	38 (*1)	J1		39 (*1)	P4		51 (LHD)
		42 (*3)			43 (*3)	S11	A	51 (LHD)
A9	C	38 (*1)	J2	A	39 (*1)	S12	B	51 (LHD)
		42 (*3)			43 (*3)	S13	C	51 (LHD)
A10		38 (*1)	J3	B	39 (*1)	S14	D	51 (LHD)
		42 (*3)			43 (*3)	S15		51 (LHD)
A11		38 (*1)	J5		39 (*1)	S18		51 (LHD)
		42 (*3)			43 (*3)	S21		51 (LHD)
A42		52 (*6)	J7	A	50 (LHD)	T6		39 (*1)
		54 (*7)	J8	B	50 (LHD)			43 (*3)
B1		38 (*1)	J9		50 (LHD)	V6	A	39 (*1)
		42 (*3)	J10		50 (LHD)			43 (*3)
C6		49 (LHD)	J14		50 (LHD)	V7	B	39 (*1)
C9	A	49 (LHD)	J15		50 (LHD)			43 (*3)
C10	B	49 (LHD)	J16		50 (LHD)	V13		51 (LHD)
C12	D	49 (LHD)	J21		50 (LHD)	Y1		51 (LHD)
D6		49 (LHD)	J23		50 (LHD)			

: Relay Blocks

Code	See Page	Relay Blocks (Relay Block Location)
2	23	Engine Room R/B (Engine Compartment Left)

: Junction Block and Wire Harness Connector

Code	See Page	Junction Block and Wire Harness (Connector Location)
IB	26 (LHD)	Engine Room Main Wire and Driver Side J/B (Lower Finish Panel)
IE		
IG	27 (LHD)	Instrument Panel Wire and Driver Side J/B (Lower Finish Panel)
IJ		
IK		
IL		
1A	32 (LHD)	Instrument Panel Wire and J/B No.1 (Instrument Panel Reinforcement Left)
1B		
1C		
1E		
2A	34	Instrument Panel Wire and J/B No.2 (Instrument Panel Reinforcement Center)

* 1 : LHD 1GR-FE * 2 : LHD 3RZ-FE * 3 : LHD 1KD-FTV * 4 : LHD 1KZ-TE * 5 : LHD 5L-E * 6 : LHD 5-Door * 7 : LHD 3-Door
* 8 : LHD 8Way Power Seat * 9 : LHD Except 8Way Power Seat * 10 : RHD 1GR-FE * 11 : RHD 3RZ-FE * 12 : RHD 1KD-FTV
* 13 : RHD 1KZ-TE * 14 : RHD 5L-E * 15 : RHD 5-Door * 16 : RHD 3-Door * 17 : RHD 8Way Power Seat
* 18 : RHD Except 8Way Power Seat

: Connector Joining Wire Harness and Wire Harness

Code	See Page	Joining Wire Harness and Wire Harness (Connector Location)
IC2	88 (LHD)	Instrument Panel Wire and Engine Room Main Wire (Left Kick Panel)
IC3		
ID2	90 (LHD)	Instrument Panel Wire and Floor No.2 Wire (Left Kick Panel)
II1	90 (LHD)	Console Box Wire and Instrument Panel Wire (Under the Instrument Panel Brace LH)
IL2	92 (LHD)	Engine Wire and Instrument Panel Wire (Right Side of the Blower Unit)
IL3		
IM1	92 (LHD)	Instrument Panel Wire and Engine Room Main Wire (Right Kick Panel)
IN1	94 (LHD)	Instrument Panel Wire and Floor Wire (Right Kick Panel)
IN4		
BC2	96 (*6)	Frame Wire and Floor No.2 Wire (Under the Left Side of Rear Seat Cushion)
BC3	100 (*7)	Floor No.2 Wire and Frame Wire (Frame Side Rail LH)
BJ1		

: Ground Points

Code	See Page	Ground Points Location
EA	78 (*1)	Front Right Fender
	82 (*3)	
EB	78 (*1)	Front Left Fender
	82 (*3)	
IL	88 (LHD)	Near the Right Side of Steering Column
BT	96 (*6)	Right Quarter Panel Inner
	100 (*7)	

: Splice Points

Code	See Page	Wire Harness with Splice Points	Code	See Page	Wire Harness with Splice Points
E5	78 (*1)	Engine Room Main Wire	B6	98 (*6)	Floor Wire
	82 (*3)			100 (*7)	
I2	90 (LHD)		B8	100 (*7)	Floor No.2 Wire
I5	90 (LHD)	Instrument Panel Wire	B9	100 (*7)	Frame Wire

* 1 : LHD 1GR-FE * 2 : LHD 3RZ-FE * 3 : LHD 1KD-FTV * 4 : LHD 1KZ-TE * 5 : LHD 5L-E * 6 : LHD 5-Door * 7 : LHD 3-Door
* 8 : LHD 8Way Power Seat * 9 : LHD Except 8Way Power Seat * 10 : RHD 1GR-FE * 11 : RHD 3RZ-FE * 12 : RHD 1KD-FTV
* 13 : RHD 1KZ-TE * 14 : RHD 5L-E * 15 : RHD 5-Door * 16 : RHD 3-Door * 17 : RHD 8Way Power Seat
* 18 : RHD Except 8Way Power Seat

VSC (RHD)

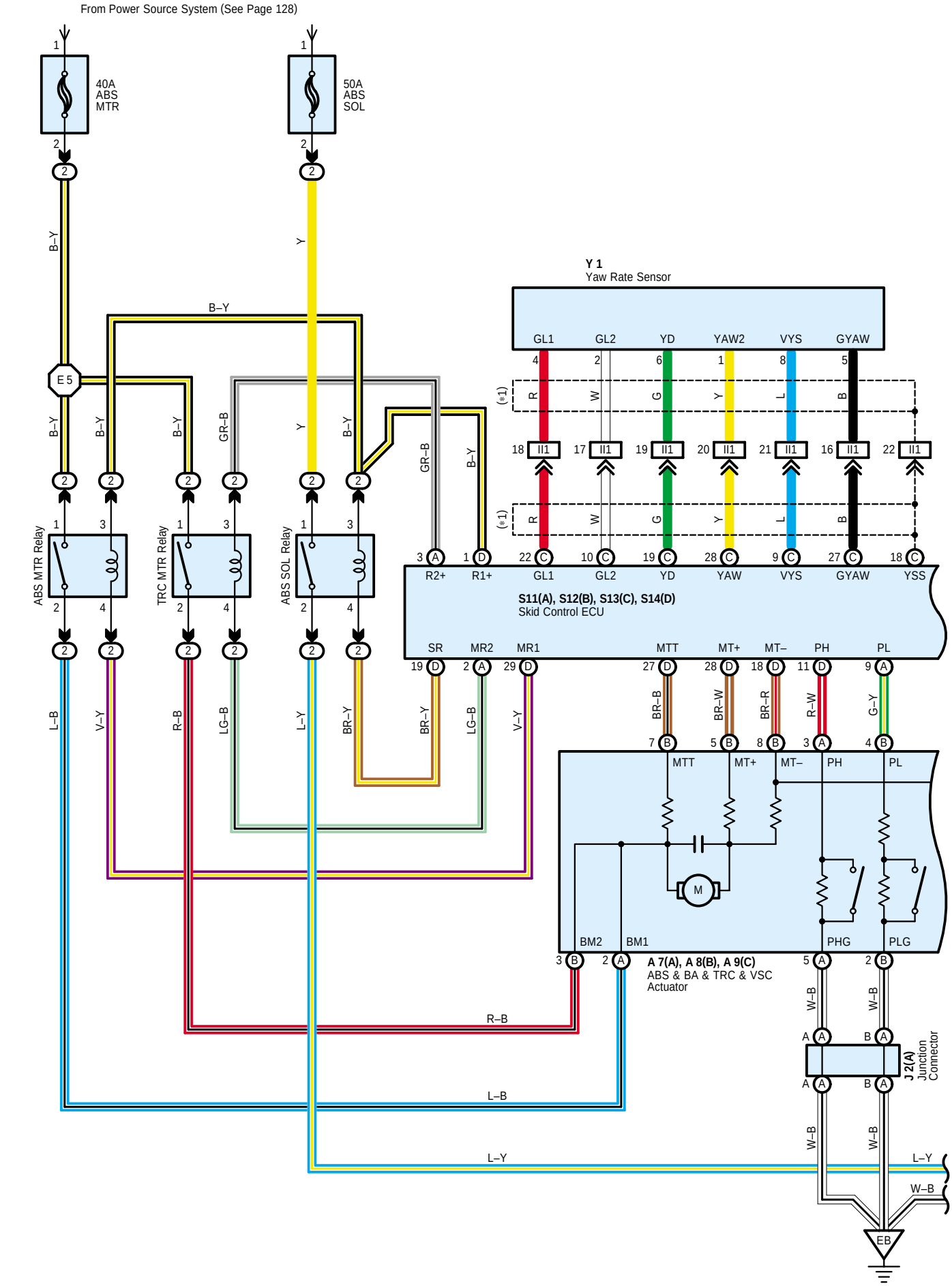
From Power Source System (See Page 128)
40A ABS MTR
50A ABS SOL
E 5
Y 1
Yaw Rate Sensor
GL1
GL2
YD
YAW2
VYS
GYAW
(*1)
ABS MTR Relay
TRC MTR Relay
ABS SOL Relay
R2+
R1+
GL1
GL2
YD
YAW
VYS
GYAW
YSS
S11(A), S12(B), S13(C), S14(D)
Skid Control ECU
SR
MR2
MR1
MTT
MT+
MT–
PH
PL
M
BM2
BM1
PHG
PLG
A 7(A), A 8(B), A 9(C)
ABS & BA & TRC & VSC
Actuator
J 2(A)
Junction
Connector
EB
B–Y
Y
GR–B
L–B
V–Y
R–B
LG–B
L–Y
BR–Y
BR–B
BR–W
BR–R
R–W
G–Y
W–B

＊1 : Shielded
＊2 : 5–Door

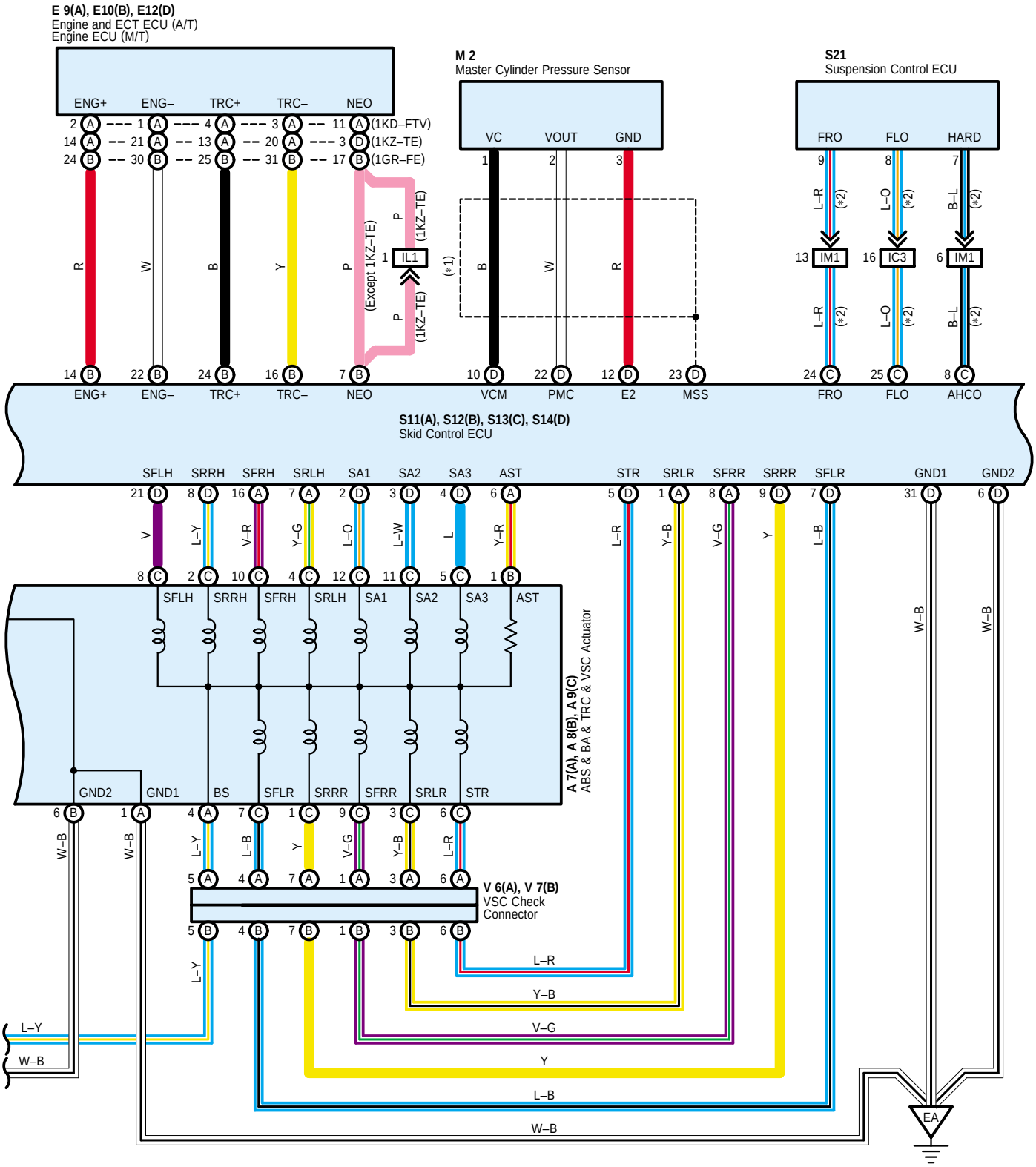

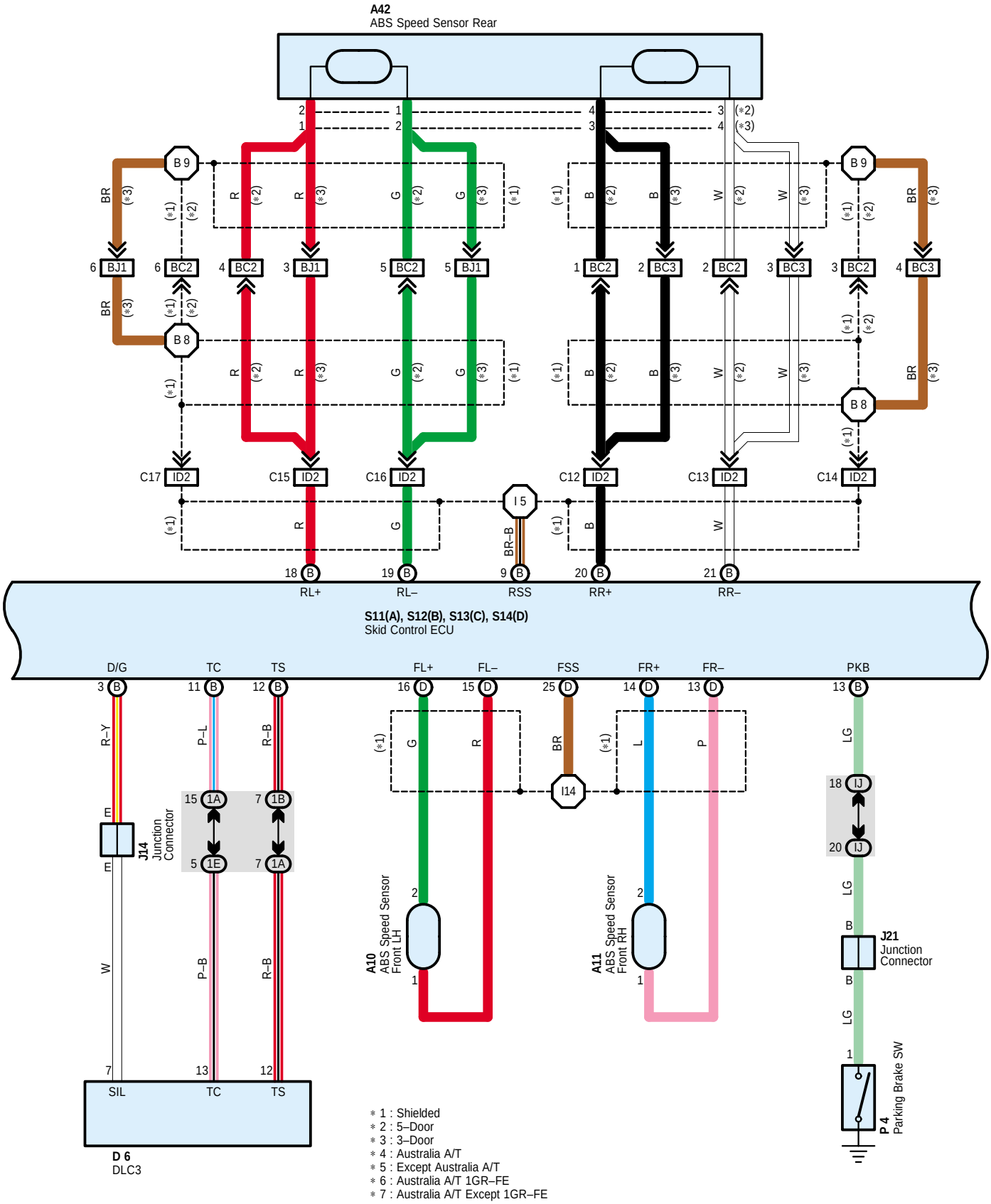
A42
ABS Speed Sensor Rear
B 9
B 8
BJ1
BC2
BC3
ID2
I 5
I14
IJ
C17
C15
C16
C12
C13
C14
RL+
RL–
RSS
RR+
RR–
S11(A), S12(B), S13(C), S14(D)
Skid Control ECU
D/G
TC
TS
FL+
FL–
FSS
FR+
FR–
PKB
J14
Junction
Connector
A10
ABS Speed Sensor
Front LH
A11
ABS Speed Sensor
Front RH
J21
Junction
Connector
P 4
Parking Brake SW
SIL
D 6
DLC3
∗ 1 : Shielded
∗ 2 : 5–Door
∗ 3 : 3–Door
∗ 4 : Australia A/T
∗ 5 : Except Australia A/T
∗ 6 : Australia A/T 1GR–FE
∗ 7 : Australia A/T Except 1GR–FE

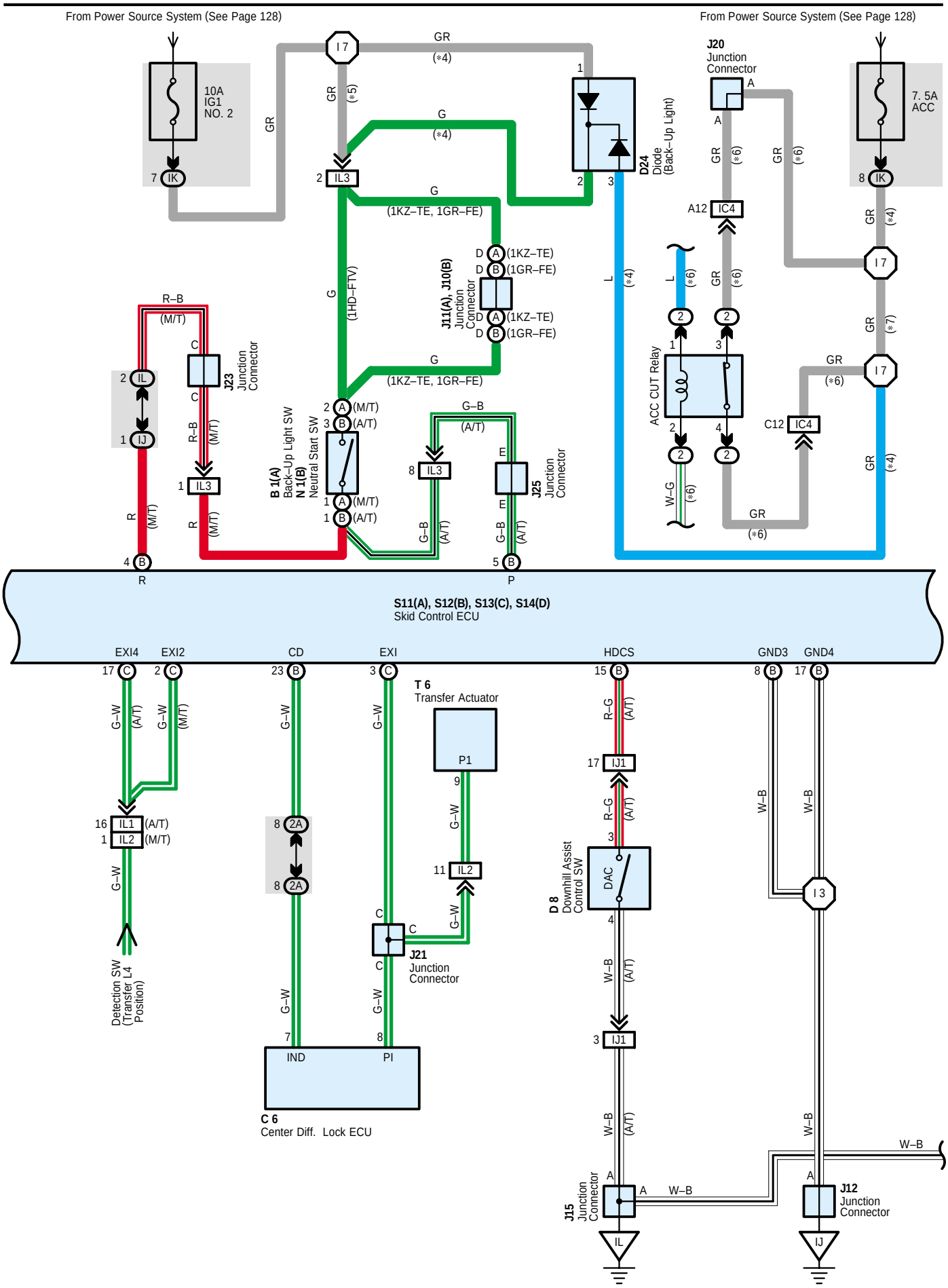
From Power Source System (See Page 128)
From Power Source System (See Page 128)
10A
IG1
NO. 2
7. 5A
ACC
J20
Junction
Connector
D24
Diode
(Back–Up Light)
J11(A), J10(B)
Junction
Connector
J23
Junction
Connector
B 1(A)
Back–Up Light SW
N 1(B)
Neutral Start SW
J25
Junction
Connector
ACC CUT Relay
S11(A), S12(B), S13(C), S14(D)
Skid Control ECU
T 6
Transfer Actuator
J21
Junction
Connector
C 6
Center Diff. Lock ECU
D 8
Downhill Assist
Control SW
J15
Junction
Connector
J12
Junction
Connector
Detection SW
(Transfer L4
Position)

VSC (RHD)

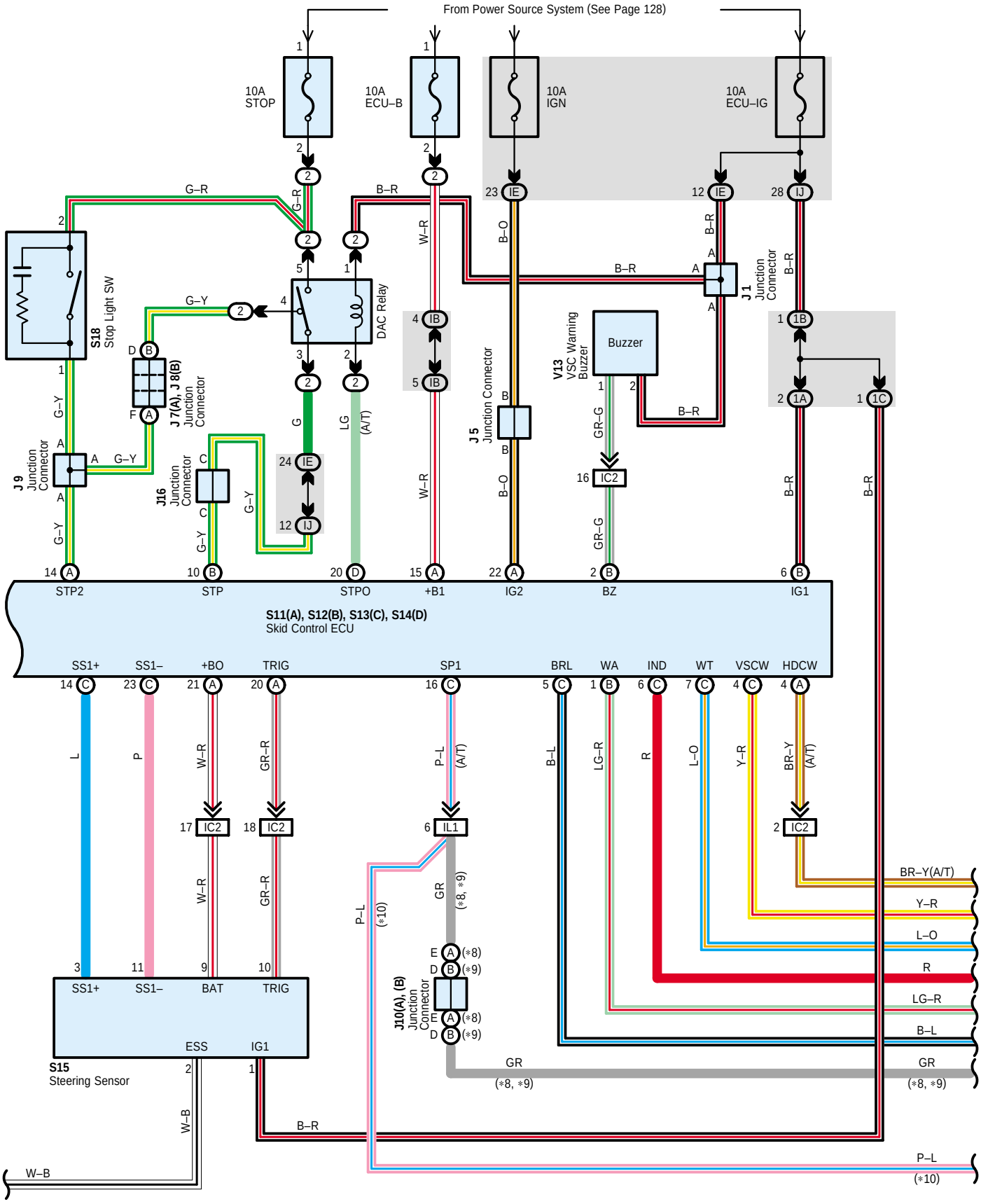
From Power Source System (See Page 128)
10A STOP
10A ECU–B
10A IGN
10A ECU–IG
S18 Stop Light SW
DAC Relay
J 7(A), J 8(B) Junction Connector
J 9 Junction Connector
J16 Junction Connector
J 5 Junction Connector
J 1 Junction Connector
V13 VSC Warning Buzzer
Buzzer
S11(A), S12(B), S13(C), S14(D)
Skid Control ECU
STP2
STP
STPO
+B1
IG2
BZ
IG1
SS1+
SS1–
+BO
TRIG
SP1
BRL
WA
IND
WT
VSCW
HDCW
IC2
IL1
J10(A), (B) Junction Connector
S15
Steering Sensor
BAT
ESS
G–R
B–R
W–R
B–O
G–Y
G
LG
(A/T)
GR–G
L
P
GR–R
P–L
GR
B–L
LG–R
R
L–O
Y–R
BR–Y
BR–Y(A/T)
W–B
(*8, *9)
(*10)

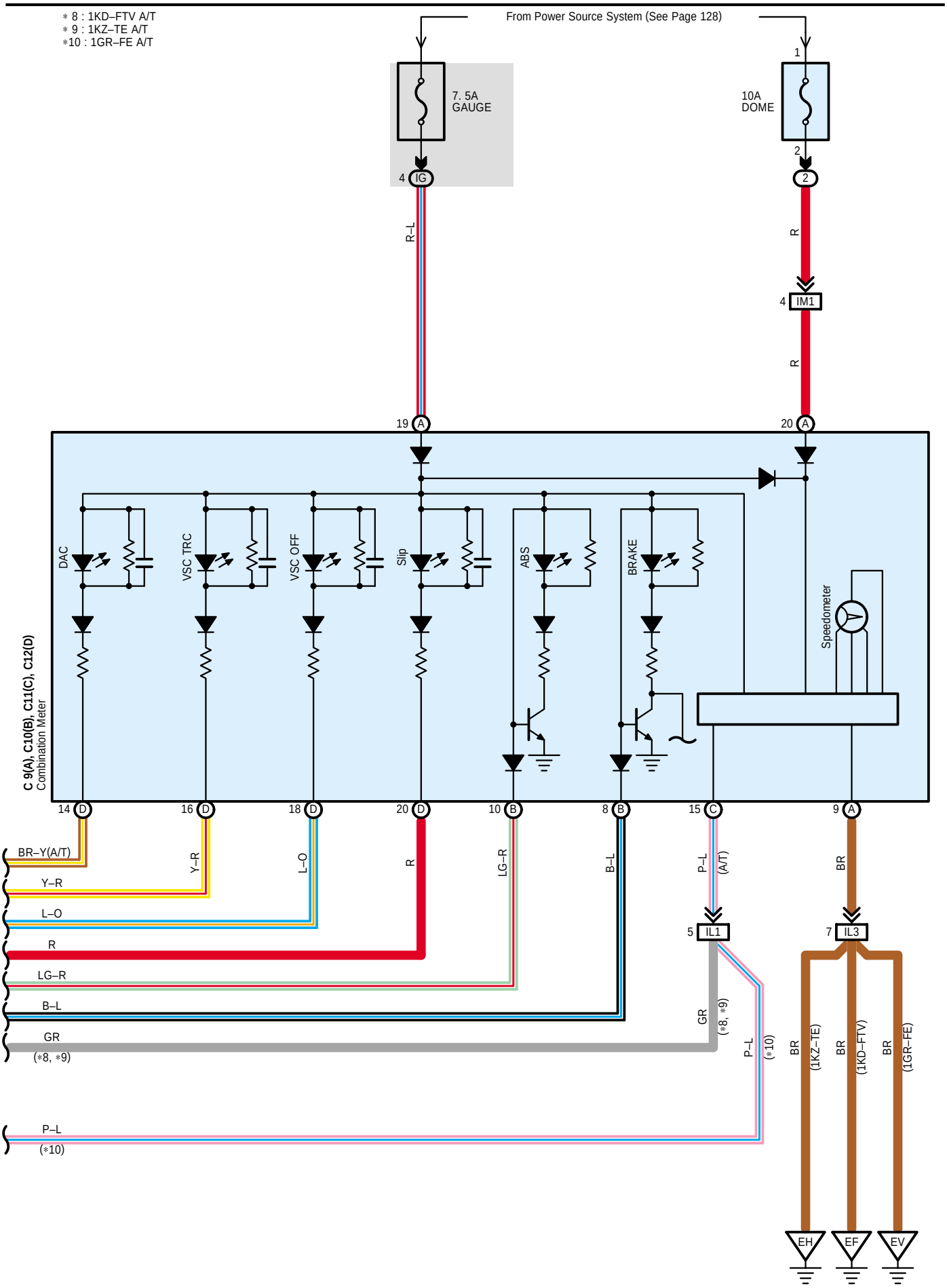
* 8 : 1KD–FTV A/T
* 9 : 1KZ–TE A/T
*10 : 1GR–FE A/T
From Power Source System (See Page 128)
7. 5A
GAUGE
10A
DOME
4 IG
1
2
2
R–L
R
4 IM1
R
19 A
20 A
DAC
VSC TRC
VSC OFF
Slip
ABS
BRAKE
Speedometer
C 9(A), C10(B), C11(C), C12(D)
Combination Meter
14 D
16 D
18 D
20 D
10 B
8 B
15 C
9 A
BR–Y(A/T)
Y–R
L–O
R
LG–R
B–L
GR
(*8, *9)
P–L
(*10)
Y–R
L–O
R
LG–R
B–L
P–L
(A/T)
BR
5 IL1
7 IL3
GR
(*8, *9)
P–L
(*10)
BR
(1KZ–TE)
BR
(1KD–FTV)
BR
(1GR–FE)
EH
EF
EV

System Outline

1. Normal Operation

The VSC system helps prevent the vehicle from slipping sideways as a result of strong front wheel skid or strong rear wheel skid during cornering.
The followings are two examples that can be considered as circumstances in which the tires exceed their lateral grip limit. The VSC system is designed to help control the vehicle behavior by controlling the engine's output and the brakes at each wheel when the vehicle is under one of the conditions indicated below.
∗ When the front wheels lose grip in relation to the rear wheels (Strong front wheel skid tendency).
∗ When the rear wheels lose grip in relation to the front wheels (Strong rear wheel skid tendency).

2. Downhill Assist Control Operation

The downhill assist control operation controls braking action of each wheel to help prevent out-of-balance vehicle posture when descending a steep hill or traveling at a speed exceeding the threshold of wheel gripping capability. When the downhill assist control is in operation, the brake system controls vehicle speed within the range of 5 to 7 km/h.
For the downhill assist control to be operative all of the following conditions have to be met:
∗ Downhill assist control switch = ON
∗ Transfer L4 selected
∗ Vehicle speed is 5 km/h or more, but less than 25 km/h.
∗ Accelerator pedal OFF
∗ Brake pedal OFF

3. Hill-Start Support Control Operation

When starting on a steep hill for ascending, the hill-start support control automatically puts the brake on momentarily - from the moment when the driver releases his foot from the brake pedal until he steps on the accelerator pedal - to help the driver start the vehicle safely and smoothly.
Please bear in mind, however, that it activates the brake system for only 3 seconds.
For the hill-start support control to be operative all of the following conditions have to be met:
∗ Shift position = D, 2, or L
∗ Vehicle not moving forward with some wheel(s) slipping
∗ Vehicle speed > 0 km/h

Service Hints

S11 (A), S12 (B), S14 (D) Skid Control ECU

(D) 6, (D) 31, (B) 8, (B) 17-Ground : Always continuity
(B) 6, (A) 22-Ground : Approx. 12 volts with the ignition SW at ON position
(A) 15-Ground : Always approx. 12 volts

: Parts Location

Code		See Page	Code		See Page	Code		See Page
A7	A	58 (*10)	D24		69 (RHD)	M2		59 (*10)
		62 (*12)	E9	A	69 (RHD)			63 (*12)
		64 (*13)	E10	B	69 (RHD)			65 (*13)
A8	B	58 (*10)	E12	D	69 (RHD)	N1	B	59 (*10)
		62 (*12)	J1		59 (*10)			63 (*12)
		64 (*13)			63 (*12)			65 (*13)
A9	C	58 (*10)			65 (*13)	P4		71 (RHD)
		62 (*12)	J2	A	59 (*10)	S11	A	71 (RHD)
		64 (*13)			63 (*12)	S12	B	71 (RHD)
A10		58 (*10)			65 (*13)	S13	C	71 (RHD)
		62 (*12)	J5		59 (*10)	S14	D	71 (RHD)
		64 (*13)			63 (*12)	S15		71 (RHD)
A11		58 (*10)			65 (*13)	S18		71 (RHD)
		62 (*12)	J7	A	70 (RHD)	S21		71 (RHD)
		64 (*13)	J8	B	70 (RHD)	T6		59 (*10)
A42		72 (*15)	J9		70 (RHD)			63 (*12)
		74 (*16)	J10	A	70 (RHD)			65 (*13)
B1	A	58 (*10)		B	70 (RHD)	V6	A	59 (*10)
		62 (*12)	J11	A	70 (RHD)			63 (*12)
		64 (*13)	J12		70 (RHD)			65 (*13)
C6		69 (RHD)	J14		70 (RHD)	V7	B	59 (*10)
C9	A	69 (RHD)	J15		70 (RHD)			63 (*12)
C10	B	69 (RHD)	J16		70 (RHD)			65 (*13)
C11	C	69 (RHD)	J20		70 (RHD)	V13		71 (RHD)
C12	D	69 (RHD)	J21		70 (RHD)	Y1		71 (RHD)
D6		69 (RHD)	J23		70 (RHD)			
D8		69 (RHD)	J25		70 (RHD)			

: Relay Blocks

Code	See Page	Relay Blocks (Relay Block Location)
2	23	Engine Room R/B (Engine Compartment Left)

: Junction Block and Wire Harness Connector

Code	See Page	Junction Block and Wire Harness (Connector Location)
IB	28 (RHD)	Engine Room Main Wire and Driver Side J/B (Lower Finish Panel)
IE		
IG	29 (RHD)	Instrument Panel Wire and Driver Side J/B (Lower Finish Panel)
IJ		
IK		
IL		
1A	32 (RHD)	Instrument Panel Wire and J/B No.1 (Instrument Panel Reinforcement Right)
1B		
1C		
1E		
2A	34	Instrument Panel Wire and J/B No.2 (Instrument Panel Reinforcement Center)

* 1 : LHD 1GR-FE * 2 : LHD 3RZ-FE * 3 : LHD 1KD-FTV * 4 : LHD 1KZ-TE * 5 : LHD 5L-E * 6 : LHD 5-Door * 7 : LHD 3-Door
* 8 : LHD 8Way Power Seat * 9 : LHD Except 8Way Power Seat * 10 : RHD 1GR-FE * 11 : RHD 3RZ-FE * 12 : RHD 1KD-FTV
* 13 : RHD 1KZ-TE * 14 : RHD 5L-E * 15 : RHD 5-Door * 16 : RHD 3-Door * 17 : RHD 8Way Power Seat
* 18 : RHD Except 8Way Power Seat

: **Connector Joining Wire Harness and Wire Harness**

Code	See Page	Joining Wire Harness and Wire Harness (Connector Location)
IC2	112 (RHD)	Instrument Panel Wire and Engine Room Main Wire (Left Kick Panel)
IC3		
IC4		
ID2	114 (RHD)	Instrument Panel Wire and Floor No.2 Wire (Left Kick Panel)
II1	114 (RHD)	Console Box Wire and Instrument Panel Wire (Under the Instrument Panel Brace LH)
IJ1	116 (RHD)	Instrument Panel Wire and Switch Wire (Front Side of the Console Box)
IL1	116 (RHD)	Engine Wire and Instrument Panel Wire (Left Side of the Blower Unit)
IL2		
IL3		
IM1	116 (RHD)	Instrument Panel Wire and Engine Room Main Wire (Right Kick Panel)
BC2	120 (*15)	Frame Wire and Floor No.2 Wire (Under the Left Side of Rear Seat Cushion)
BC3	124 (*16)	Floor No.2 Wire and Frame Wire (Frame Side Rail LH)
BJ1		

: **Ground Points**

Code	See Page	Ground Points Location
EA	102 (*10)	Front Right Fender
	106 (*12)	
	108 (*13)	
EB	102 (*10)	Front Left Fender
	106 (*12)	
	108 (*13)	
EF	106 (*12)	Rear Part of Cylinder Block
EH	108 (*13)	
EV	102 (*10)	Rear Side of Left Bank Cylinder Block
IJ	112 (RHD)	Right Kick Panel
IL	112 (RHD)	Instrument Panel Brace RH

: **Splice Points**

Code	See Page	Wire Harness with Splice Points	Code	See Page	Wire Harness with Splice Points
E5	102 (*10)	Engine Room Main Wire	I7	114 (RHD)	Instrument Panel Wire
	106 (*12)		I14	114 (RHD)	Engine Room Main Wire
	108 (*13)		B8	124 (*16)	Floor No.2 Wire
I3	114 (RHD)	Instrument Panel Wire	B9	124 (*16)	Frame Wire
I5					

* 1 : LHD 1GR-FE * 2 : LHD 3RZ-FE * 3 : LHD 1KD-FTV * 4 : LHD 1KZ-TE * 5 : LHD 5L-E * 6 : LHD 5-Door * 7 : LHD 3-Door
* 8 : LHD 8Way Power Seat * 9 : LHD Except 8Way Power Seat * 10 : RHD 1GR-FE * 11 : RHD 3RZ-FE * 12 : RHD 1KD-FTV
* 13 : RHD 1KZ-TE * 14 : RHD 5L-E * 15 : RHD 5-Door * 16 : RHD 3-Door * 17 : RHD 8Way Power Seat
* 18 : RHD Except 8Way Power Seat

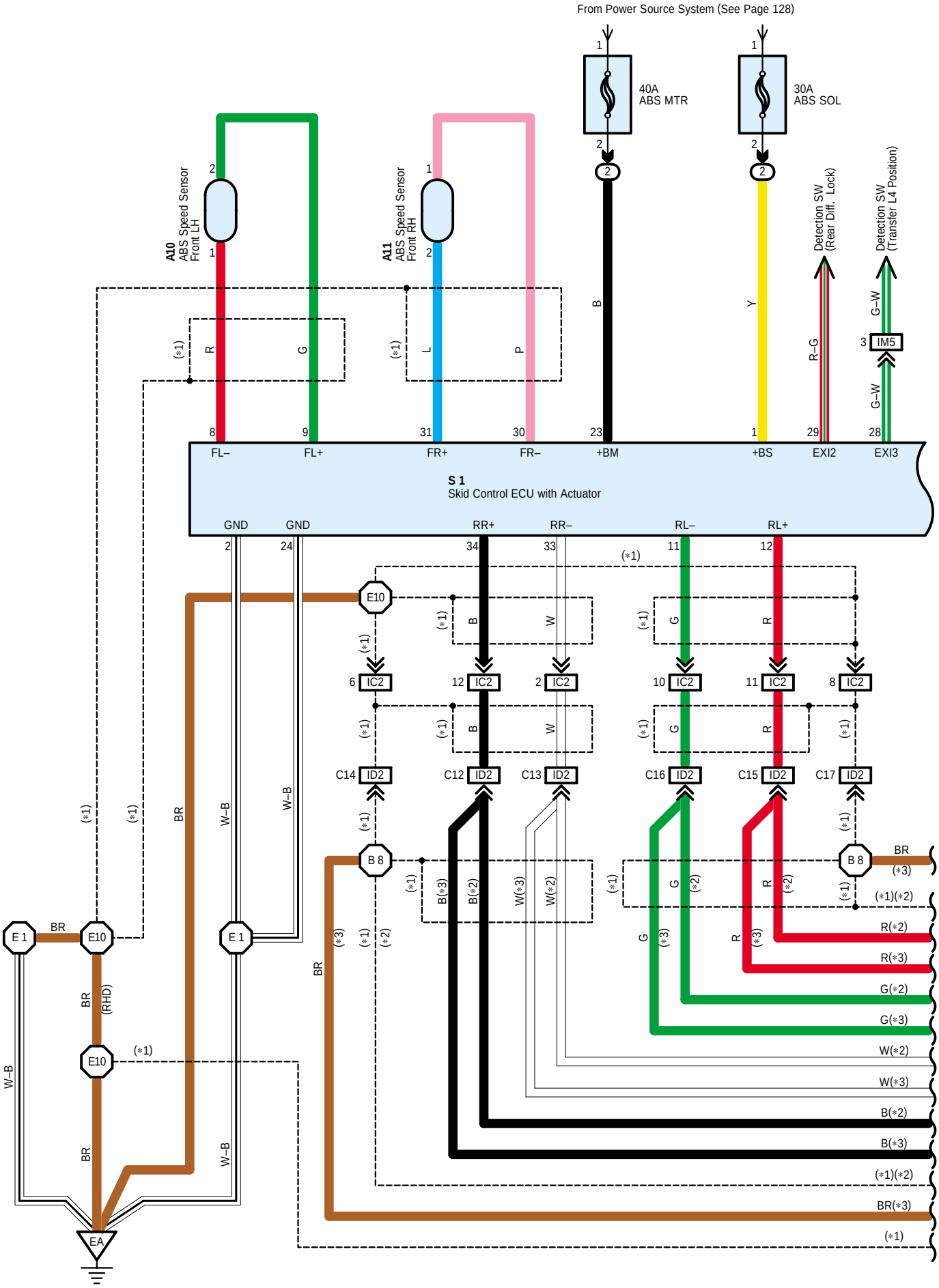
From Power Source System (See Page 128)
40A
ABS MTR
30A
ABS SOL
A10
ABS Speed Sensor
Front LH
A11
ABS Speed Sensor
Front RH
Detection SW
(Rear Diff. Lock)
Detection SW
(Transfer L4 Position)
IM5
FL–
FL+
FR+
FR–
+BM
+BS
EXI2
EXI3
S 1
Skid Control ECU with Actuator
GND
GND
RR+
RR–
RL–
RL+
E10
IC2
ID2
B 8
E 1
EA
BR(*3)
(*1)(*2)
R(*2)
R(*3)
G(*2)
G(*3)
W(*2)
W(*3)
B(*2)
B(*3)
(*1)(*2)
BR(*3)
(*1)

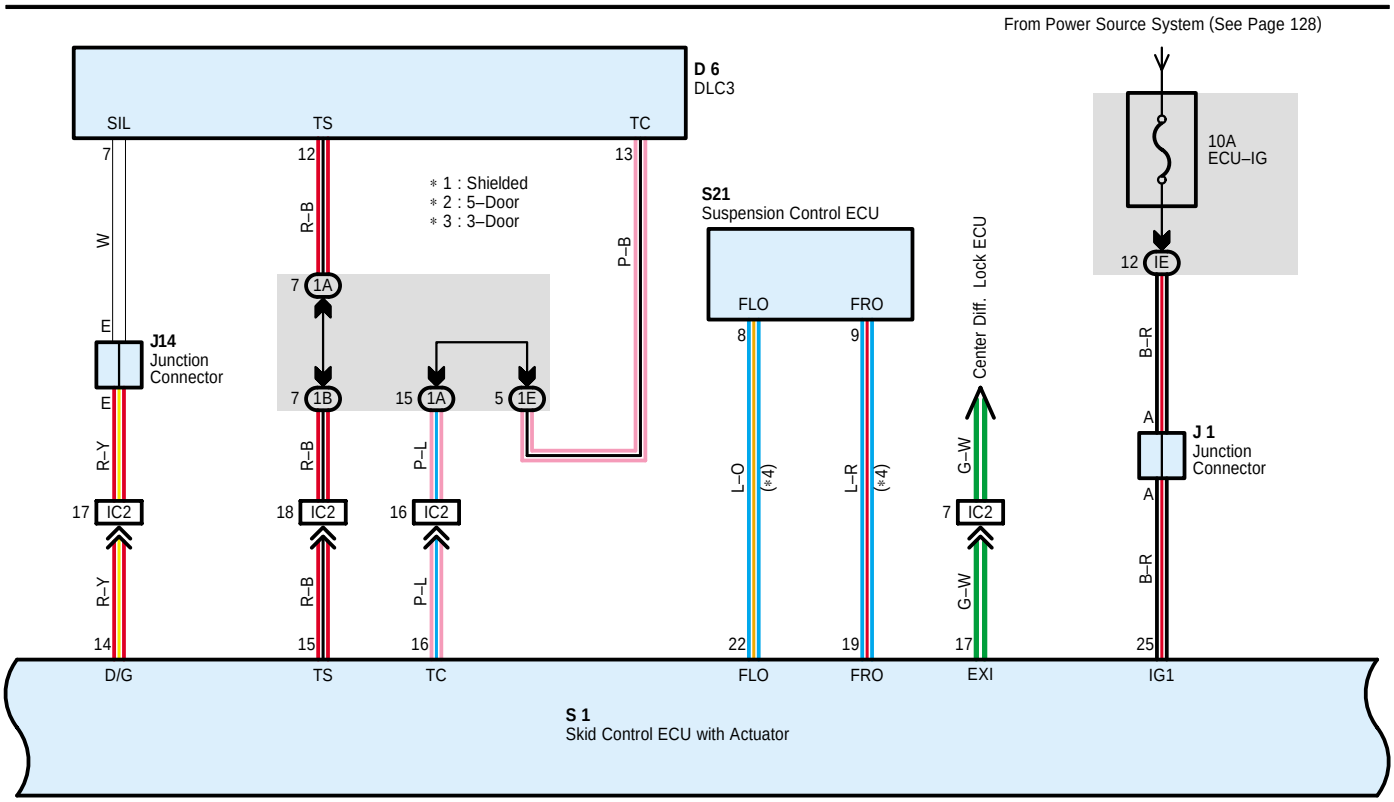
From Power Source System (See Page 128)
D 6
DLC3
SIL
TS
TC
7
12
13
W
R–B
P–B
＊1 : Shielded
＊2 : 5–Door
＊3 : 3–Door
7 1A
7 1B
15 1A
5 1E
E
J14
Junction
Connector
E
R–Y
17 IC2
18 IC2
16 IC2
R–Y
14
R–B
15
P–L
16
D/G
TS
TC
S21
Suspension Control ECU
FLO
FRO
8
9
L–O
(＊4)
L–R
(＊4)
22
19
FLO
FRO
Center Diff. Lock ECU
G–W
7 IC2
G–W
17
EXI
10A
ECU–IG
12 IE
B–R
A
J 1
Junction
Connector
A
B–R
25
IG1
S 1
Skid Control ECU with Actuator

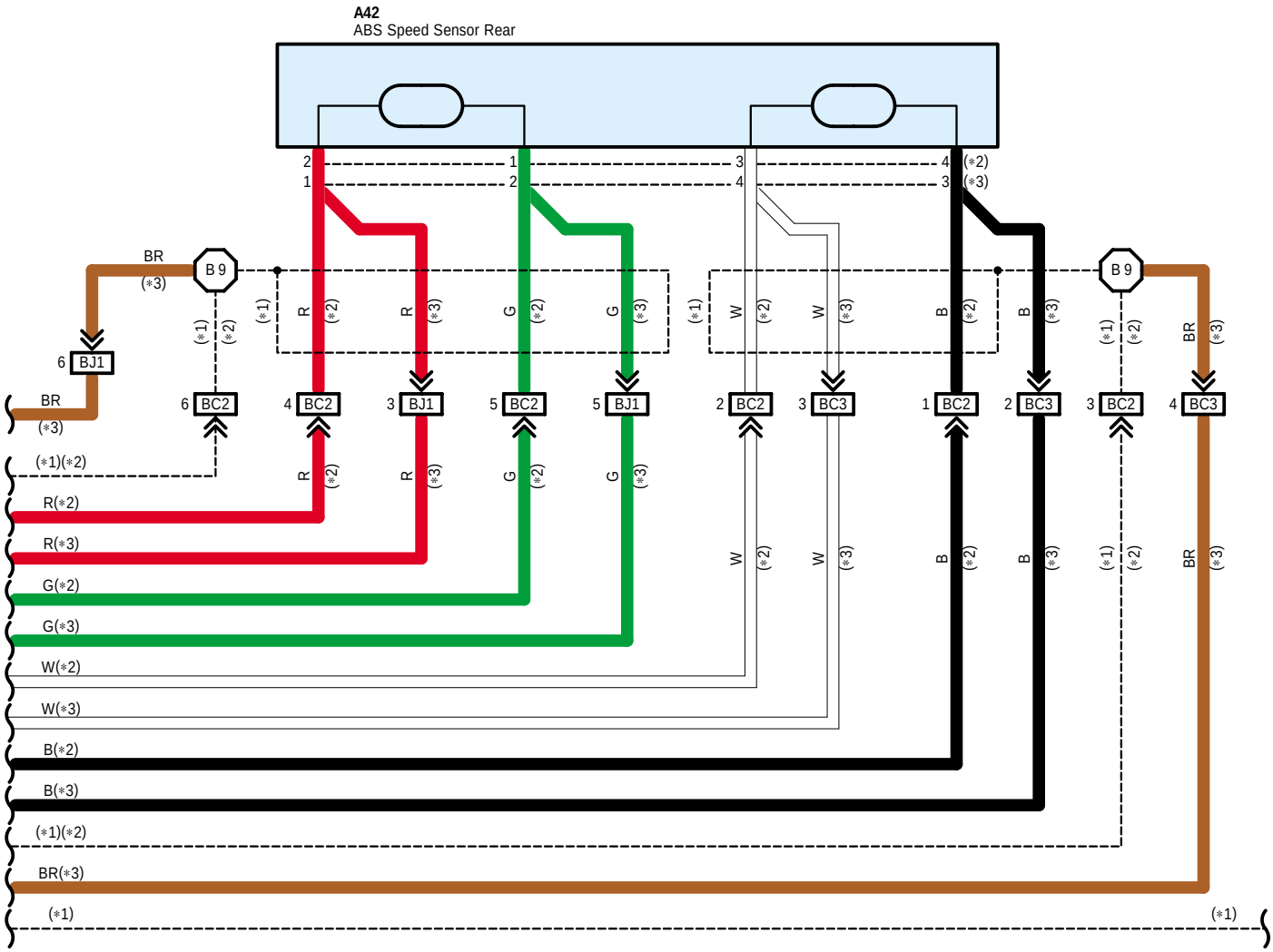
A42
ABS Speed Sensor Rear
2
1
1
2
3
4
4
3
(＊2)
(＊3)
BR
(＊3)
B 9
6 BJ1
BR
(＊3)
6 BC2
4 BC2
3 BJ1
5 BC2
5 BJ1
2 BC2
3 BC3
1 BC2
2 BC3
3 BC2
4 BC3
(＊1)(＊2)
R(＊2)
R(＊3)
G(＊2)
G(＊3)
W(＊2)
W(＊3)
B(＊2)
B(＊3)
(＊1)(＊2)
BR(＊3)
(＊1)
(＊1)

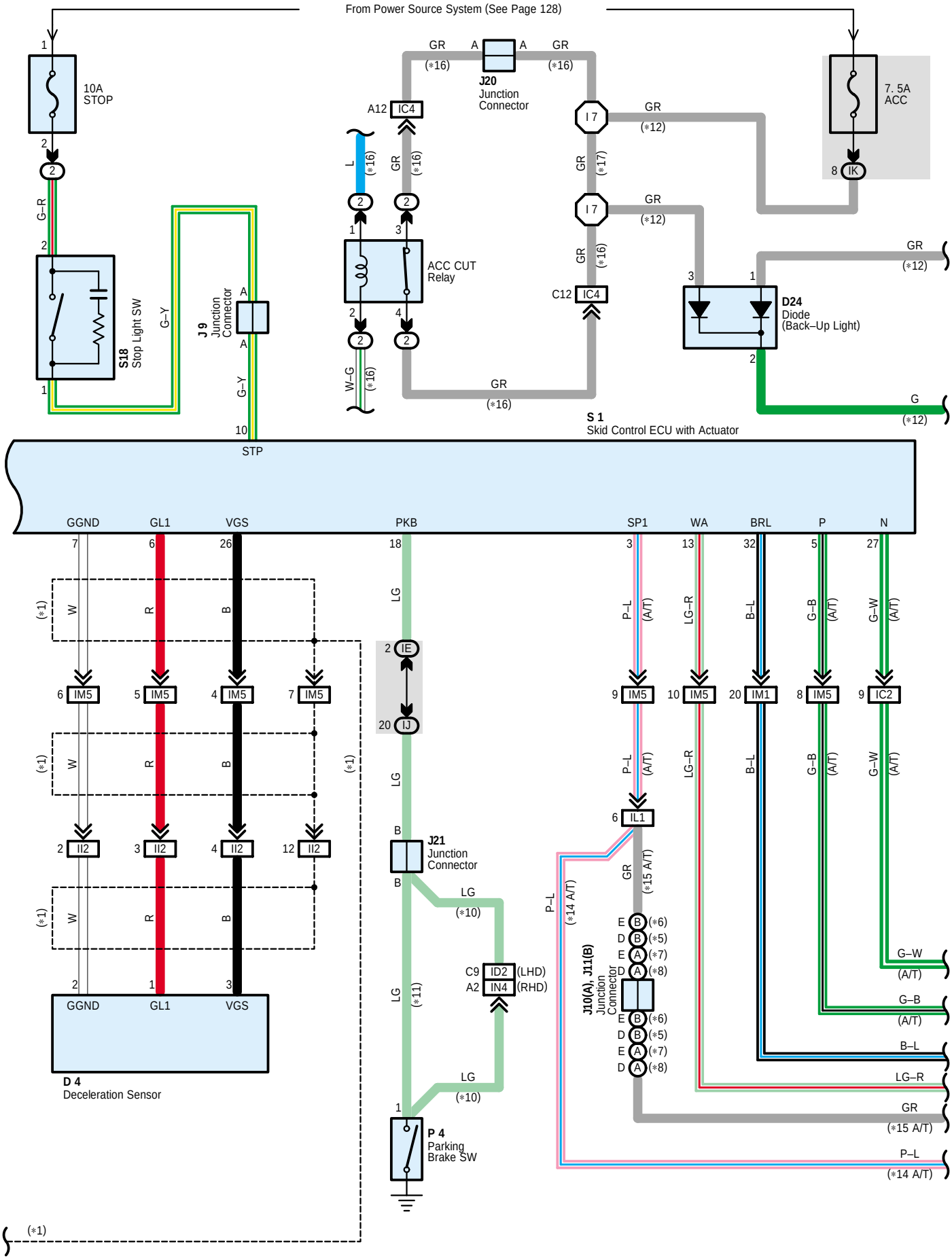
From Power Source System (See Page 128)
10A
STOP
S18
Stop Light SW
J 9
Junction
Connector
STP
J20
Junction
Connector
ACC CUT
Relay
7. 5A
ACC
D24
Diode
(Back–Up Light)
S 1
Skid Control ECU with Actuator
GGND
GL1
VGS
PKB
SP1
WA
BRL
P
N
D 4
Deceleration Sensor
J21
Junction
Connector
P 4
Parking
Brake SW
J10(A), J11(B)
Junction
Connector
G–W
(A/T)
G–B
(A/T)
B–L
LG–R
GR
(*15 A/T)
P–L
(*14 A/T)
G
(*12)

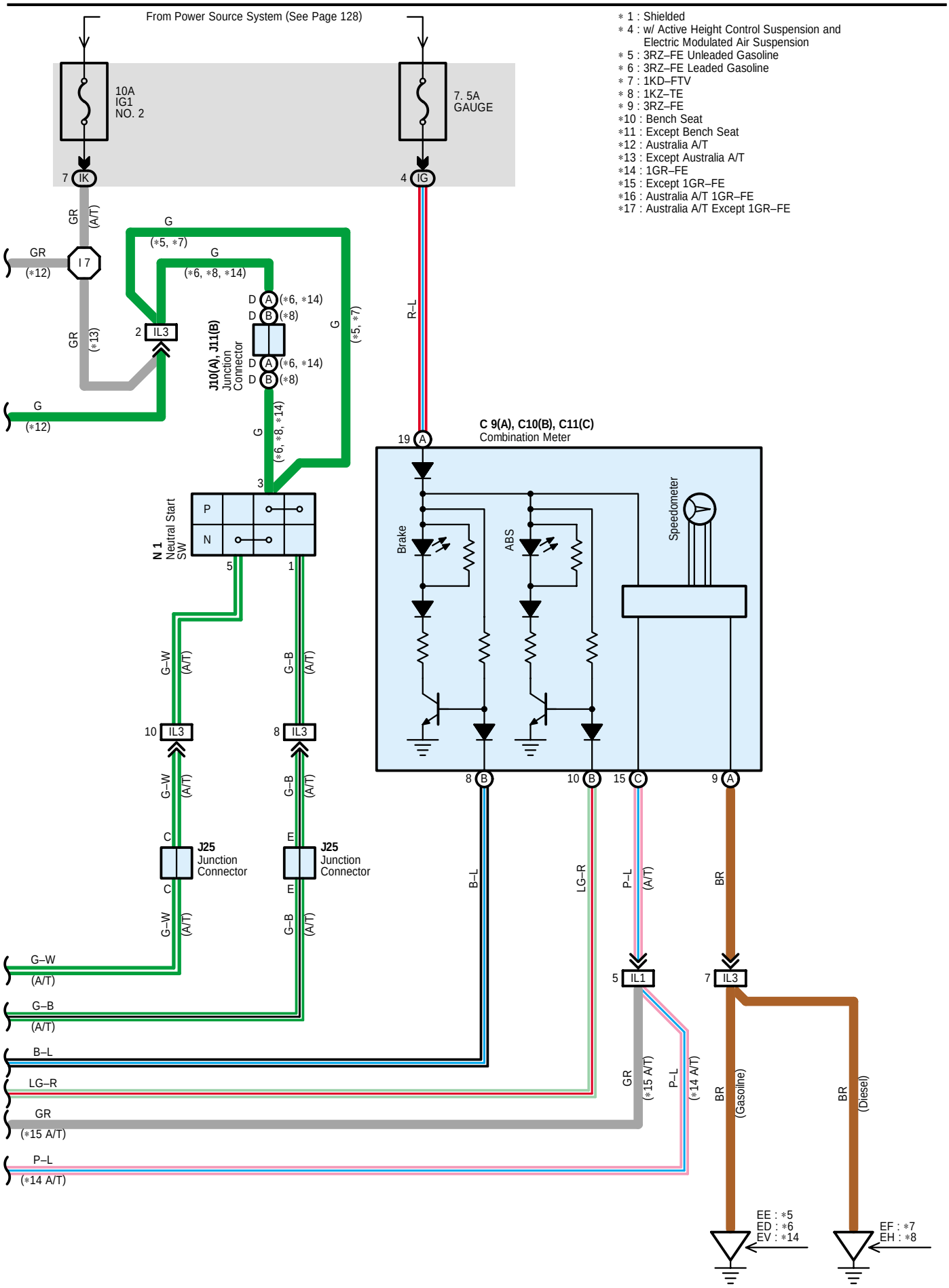
From Power Source System (See Page 128)
10A
IG1
NO. 2
7. 5A
GAUGE
7 IK
4 IG
∗ 1 : Shielded
∗ 4 : w/ Active Height Control Suspension and Electric Modulated Air Suspension
∗ 5 : 3RZ–FE Unleaded Gasoline
∗ 6 : 3RZ–FE Leaded Gasoline
∗ 7 : 1KD–FTV
∗ 8 : 1KZ–TE
∗ 9 : 3RZ–FE
∗10 : Bench Seat
∗11 : Except Bench Seat
∗12 : Australia A/T
∗13 : Except Australia A/T
∗14 : 1GR–FE
∗15 : Except 1GR–FE
∗16 : Australia A/T 1GR–FE
∗17 : Australia A/T Except 1GR–FE
GR (A/T)
GR (∗12)
I 7
GR (∗13)
G (∗5, ∗7)
G (∗6, ∗8, ∗14)
2 IL3
G (∗12)
D A (∗6, ∗14)
D B (∗8)
J10(A), J11(B) Junction Connector
G (∗5, ∗7)
R–L
G (∗6, ∗8, ∗14)
3
N 1 Neutral Start SW
P
N
5
1
C 9(A), C10(B), C11(C) Combination Meter
19 A
Brake
ABS
Speedometer
G–W (A/T)
G–B (A/T)
10 IL3
8 IL3
C
E
J25 Junction Connector
8 B
10 B
15 C
9 A
B–L
LG–R
P–L (A/T)
BR
5 IL1
7 IL3
G–W (A/T)
G–B (A/T)
B–L
LG–R
GR (∗15 A/T)
P–L (∗14 A/T)
BR (Gasoline)
BR (Diesel)
EE : ∗5
ED : ∗6
EV : ∗14
EF : ∗7
EH : ∗8

System Outline

This system controls the respective brake fluid pressures acting on the disc brake cylinders of the right front wheel, left front wheel and rear wheels when the brakes are applied in a panic stop so that the wheels do not lock. This results in improved directional stability and steerability during panic braking.

1. Input Signals

(1) Speed sensor signal

The speed of the wheels is detected and input to TERMINALS 9, 12, 31 and 34 of the skid control ECU with actuator.

(2) Stop light SW signal

A signal is input to TERMINAL 10 of the skid control ECU with actuator when the brake pedal is depressed.

2. System Operation

During sudden braking the skid control ECU with actuator has signals input from each sensor, which controls the current to the solenoid inside the actuator and lets the hydraulic pressure acting on each wheel cylinder escape to the reservoir. The pump inside the actuator is also operating at this time and it returns the brake fluid from the reservoir to the master cylinder, thus preventing locking of the vehicle wheels.

If the skid control ECU with actuator judges that the hydraulic pressure acting on the wheel cylinder is insufficient, the current on the solenoid is controlled and the hydraulic pressure is increased. Holding of the hydraulic pressure is also controlled by the skid control ECU with actuator, by the same method as above. Pressure reduction, holding and increase are repeated to maintain vehicle stability and to improve steerability during sudden braking.

Service Hints

S1 Skid Control ECU with Actuator

2, 24–Ground : Always continuity
25–Ground : Approx. 12 volts with the ignition SW at ON position
10–Ground : Approx. 12 volts with the brake pedal depressed
1, 23–Ground : Always approx. 12 volts

: Parts Location

Code	See Page	Code	See Page	Code	See Page
A10	38 (*1)	C11 C	69 (RHD)	J21	70 (RHD)
	40 (*2)	D4	49 (LHD)	J25	50 (LHD)
	42 (*3)		69 (RHD)		70 (RHD)
	44 (*4)	D6	49 (LHD)	N1	39 (*1)
	58 (*10)		69 (RHD)		41 (*2)
	60 (*11)	D24	69 (RHD)		43 (*3)
	62 (*12)	J1	39 (*1)		45 (*4)
	64 (*13)		41 (*2)		59 (*10)
A11	38 (*1)		43 (*3)		61 (*11)
	40 (*2)		45 (*4)		63 (*12)
	42 (*3)		59 (*10)		65 (*13)
	44 (*4)		61 (*11)	P4	51 (LHD)
	58 (*10)		63 (*12)		71 (RHD)
	60 (*11)		65 (*13)	S1	39 (*1)
	62 (*12)	J9	50 (LHD)		41 (*2)
	64 (*13)		70 (RHD)		43 (*3)
A42	52 (*6)	J10 A	50 (LHD)		45 (*4)
	54 (*7)		70 (RHD)		59 (*10)
	72 (*15)	J11 B	50 (LHD)		61 (*11)
	74 (*16)		70 (RHD)		63 (*12)
C9 A	49 (LHD)	J14	50 (LHD)		65 (*13)
	69 (RHD)		70 (RHD)	S18	51 (LHD)
C10 B	49 (LHD)	J20	50 (LHD)		71 (RHD)
	69 (RHD)		70 (RHD)	S21	51 (LHD)
C11 C	49 (LHD)	J21	50 (LHD)		71 (RHD)

: Relay Blocks

Code	See Page	Relay Blocks (Relay Block Location)
2	23	Engine Room R/B (Engine Compartment Left)

: Junction Block and Wire Harness Connector

Code	See Page	Junction Block and Wire Harness (Connector Location)
IE	26 (LHD)	Engine Room Main Wire and Driver Side J/B (Lower Finish Panel)
	28 (RHD)	
IG	27 (LHD)	Instrument Panel Wire and Driver Side J/B (Lower Finish Panel)
	29 (RHD)	
IJ	27 (LHD)	
	29 (RHD)	
IK	27 (LHD)	
	29 (RHD)	
1A	32 (LHD)	Instrument Panel Wire and J/B No.1 (Instrument Panel Reinforcement Left)
	32 (RHD)	Instrument Panel Wire and J/B No.1 (Instrument Panel Reinforcement Right)
1B	32 (LHD)	Instrument Panel Wire and J/B No.1 (Instrument Panel Reinforcement Left)
	32 (RHD)	Instrument Panel Wire and J/B No.1 (Instrument Panel Reinforcement Right)
1E	32 (LHD)	Instrument Panel Wire and J/B No.1 (Instrument Panel Reinforcement Left)
	32 (RHD)	Instrument Panel Wire and J/B No.1 (Instrument Panel Reinforcement Right)

* 1 : LHD 1GR-FE * 2 : LHD 3RZ-FE * 3 : LHD 1KD-FTV * 4 : LHD 1KZ-TE * 5 : LHD 5L-E * 6 : LHD 5-Door * 7 : LHD 3-Door
* 8 : LHD 8Way Power Seat * 9 : LHD Except 8Way Power Seat * 10 : RHD 1GR-FE * 11 : RHD 3RZ-FE * 12 : RHD 1KD-FTV
* 13 : RHD 1KZ-TE * 14 : RHD 5L-E * 15 : RHD 5-Door * 16 : RHD 3-Door * 17 : RHD 8Way Power Seat
* 18 : RHD Except 8Way Power Seat

: Connector Joining Wire Harness and Wire Harness

Code	See Page	Joining Wire Harness and Wire Harness (Connector Location)
IC2	88 (LHD)	Instrument Panel Wire and Engine Room Main Wire (Left Kick Panel)
	112 (RHD)	
IC4	112 (RHD)	
ID2	90 (LHD)	Instrument Panel Wire and Floor No.2 Wire (Left Kick Panel)
	114 (RHD)	
II2	90 (LHD)	Console Box Wire and Instrument Panel Wire (Under the Instrument Panel Brace LH)
	114 (RHD)	
IL1	92 (LHD)	Engine Wire and Instrument Panel Wire (Right Side of the Blower Unit)
	116 (RHD)	Engine Wire and Instrument Panel Wire (Left Side of the Blower Unit)
IL3	92 (LHD)	Engine Wire and Instrument Panel Wire (Right Side of the Blower Unit)
	116 (RHD)	Engine Wire and Instrument Panel Wire (Left Side of the Blower Unit)
IM1	92 (LHD)	Instrument Panel Wire and Engine Room Main Wire (Right Kick Panel)
	116 (RHD)	
IM5	92 (LHD)	
	116 (RHD)	
IN4	118 (RHD)	Instrument Panel Wire and Floor Wire (Right Kick Panel)
BC2	96 (*6)	Frame Wire and Floor No.2 Wire (Under the Left Side of Rear Seat Cushion)
	120 (*15)	
BC3	100 (*7)	Floor No.2 Wire and Frame Wire (Frame Side Rail LH)
	124 (*16)	
BJ1	100 (*7)	
	124 (*16)	

: Ground Points

Code	See Page	Ground Points Location
EA	78 (*1)	Front Right Fender
	80 (*2)	
	82 (*3)	
	84 (*4)	
	102 (*10)	
	104 (*11)	
	106 (*12)	
	108 (*13)	
ED	80 (*2)	Ignition Coil Bracket
	104 (*11)	
EE	80 (*2)	Intake Manifold
	104 (*11)	
EF	82 (*3)	Rear Part of Cylinder Block
	106 (*12)	
EH	84 (*4)	
	108 (*13)	
EV	78 (*1)	Rear Side of Left Bank Cylinder Block
	102 (*10)	

* 1 : LHD 1GR-FE * 2 : LHD 3RZ-FE * 3 : LHD 1KD-FTV * 4 : LHD 1KZ-TE * 5 : LHD 5L-E * 6 : LHD 5-Door * 7 : LHD 3-Door
* 8 : LHD 8Way Power Seat * 9 : LHD Except 8Way Power Seat * 10 : RHD 1GR-FE * 11 : RHD 3RZ-FE * 12 : RHD 1KD-FTV
* 13 : RHD 1KZ-TE * 14 : RHD 5L-E * 15 : RHD 5-Door * 16 : RHD 3-Door * 17 : RHD 8Way Power Seat
* 18 : RHD Except 8Way Power Seat

: **Splice Points**

Code	See Page	Wire Harness with Splice Points	Code	See Page	Wire Harness with Splice Points
E1	78 (*1)	Engine Room Main Wire	E10	84 (*4)	Engine Room Main Wire
	80 (*2)			102 (*10)	
	82 (*3)			104 (*11)	
	84 (*4)			106 (*12)	
	102 (*10)			108 (*13)	
	104 (*11)		I7	90 (LHD)	Instrument Panel Wire
	106 (*12)			114 (RHD)	
	108 (*13)		B8	100 (*7)	Floor No.2 Wire
E10	78 (*1)			124 (*16)	
	80 (*2)		B9	100 (*7)	Frame Wire
	82 (*3)			124 (*16)	

* 1 : LHD 1GR-FE * 2 : LHD 3RZ-FE * 3 : LHD 1KD-FTV * 4 : LHD 1KZ-TE * 5 : LHD 5L-E * 6 : LHD 5-Door * 7 : LHD 3-Door
* 8 : LHD 8Way Power Seat * 9 : LHD Except 8Way Power Seat * 10 : RHD 1GR-FE * 11 : RHD 3RZ-FE * 12 : RHD 1KD-FTV
* 13 : RHD 1KZ-TE * 14 : RHD 5L-E * 15 : RHD 5-Door * 16 : RHD 3-Door * 17 : RHD 8Way Power Seat
* 18 : RHD Except 8Way Power Seat

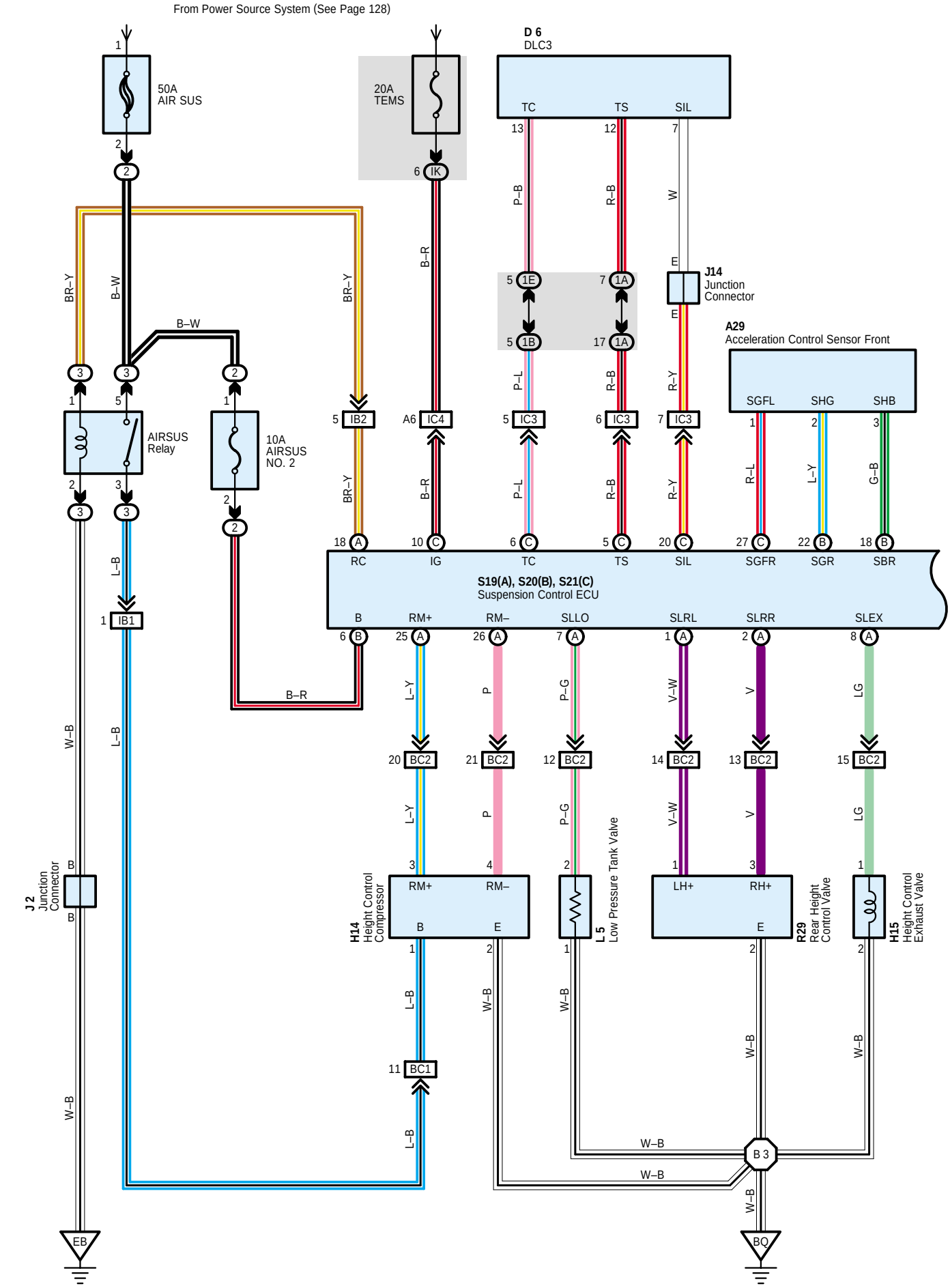
From Power Source System (See Page 128)
50A
AIR SUS
20A
TEMS
D 6
DLC3
TC
TS
SIL
J14
Junction
Connector
A29
Acceleration Control Sensor Front
SGFL
SHG
SHB
AIRSUS
Relay
10A
AIRSUS
NO. 2
S19(A), S20(B), S21(C)
Suspension Control ECU
RC
IG
TC
TS
SIL
SGFR
SGR
SBR
B
RM+
RM–
SLLO
SLRL
SLRR
SLEX
J 2
Junction
Connector
H14
Height Control
Compressor
L 5
Low Pressure Tank Valve
R29
Rear Height
Control Valve
H15
Height Control
Exhaust Valve
LH+
RH+
B 3
EB
BQ

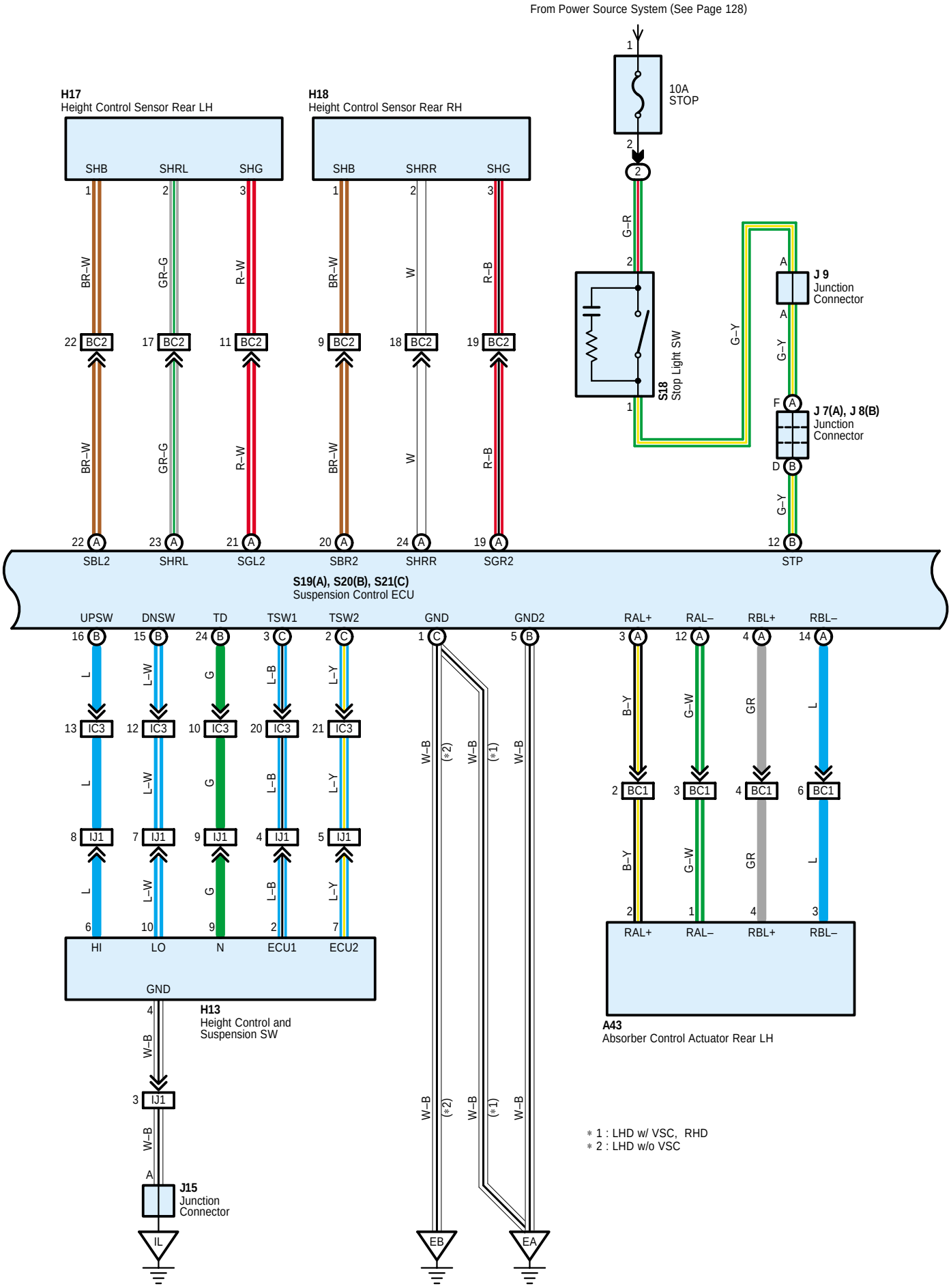
From Power Source System (See Page 128)
10A
STOP
H17
Height Control Sensor Rear LH
SHB
SHRL
SHG
H18
Height Control Sensor Rear RH
SHB
SHRR
SHG
BR–W
GR–G
R–W
W
R–B
BC2
G–R
S18
Stop Light SW
G–Y
J 9
Junction
Connector
J 7(A), J 8(B)
Junction
Connector
SBL2
SHRL
SGL2
SBR2
SHRR
SGR2
STP
S19(A), S20(B), S21(C)
Suspension Control ECU
UPSW
DNSW
TD
TSW1
TSW2
GND
GND2
RAL+
RAL–
RBL+
RBL–
L
L–W
G
L–B
L–Y
IC3
IJ1
HI
LO
N
ECU1
ECU2
W–B
(*2)
(*1)
BC1
B–Y
G–W
GR
A43
Absorber Control Actuator Rear LH
H13
Height Control and
Suspension SW
J15
Junction
Connector
IL
EB
EA
* 1 : LHD w/ VSC, RHD
* 2 : LHD w/o VSC

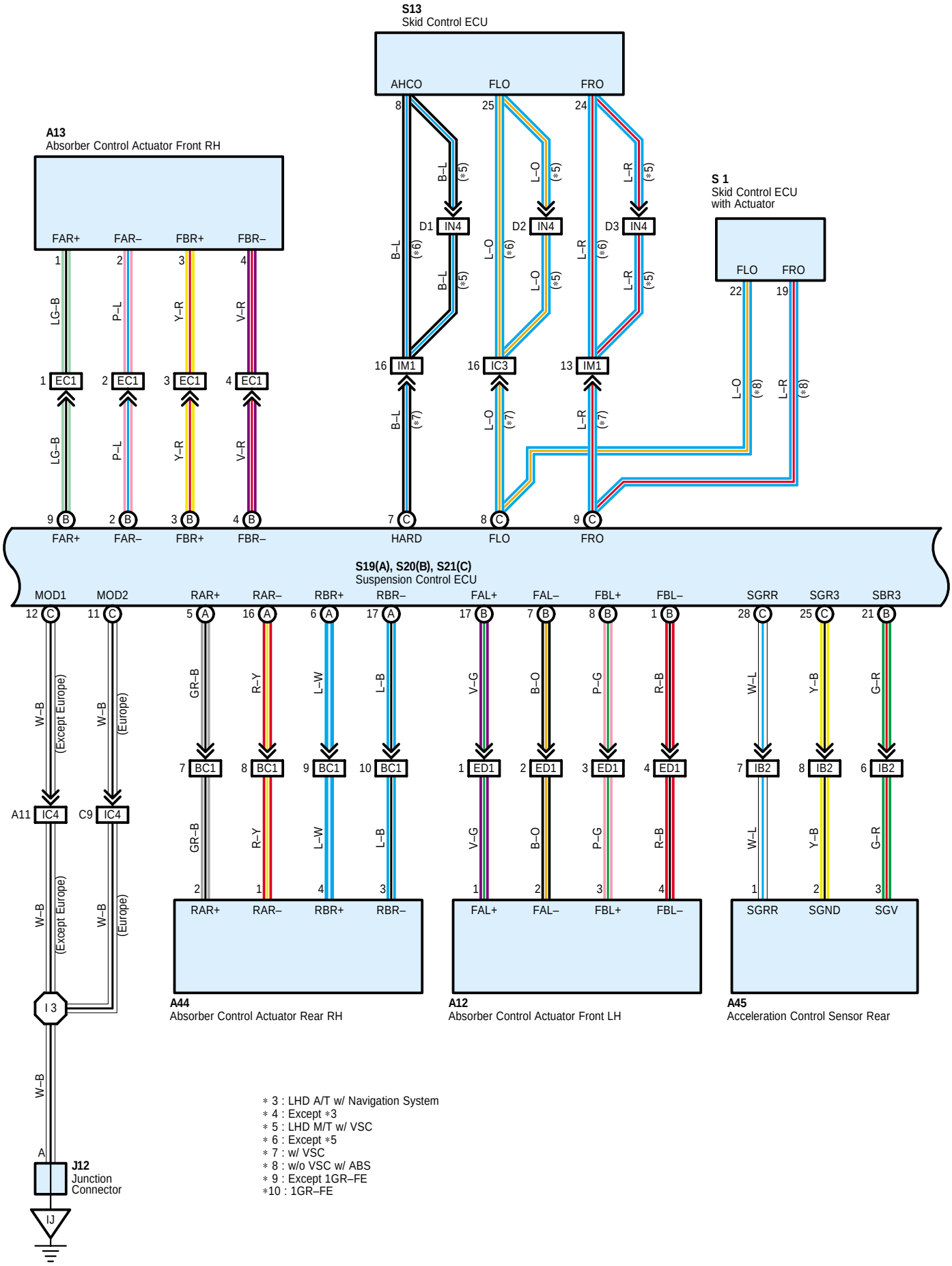

∗ 3 : LHD A/T w/ Navigation System
∗ 4 : Except ∗3
∗ 5 : LHD M/T w/ VSC
∗ 6 : Except ∗5
∗ 7 : w/ VSC
∗ 8 : w/o VSC w/ ABS
∗ 9 : Except 1GR–FE
∗10 : 1GR–FE

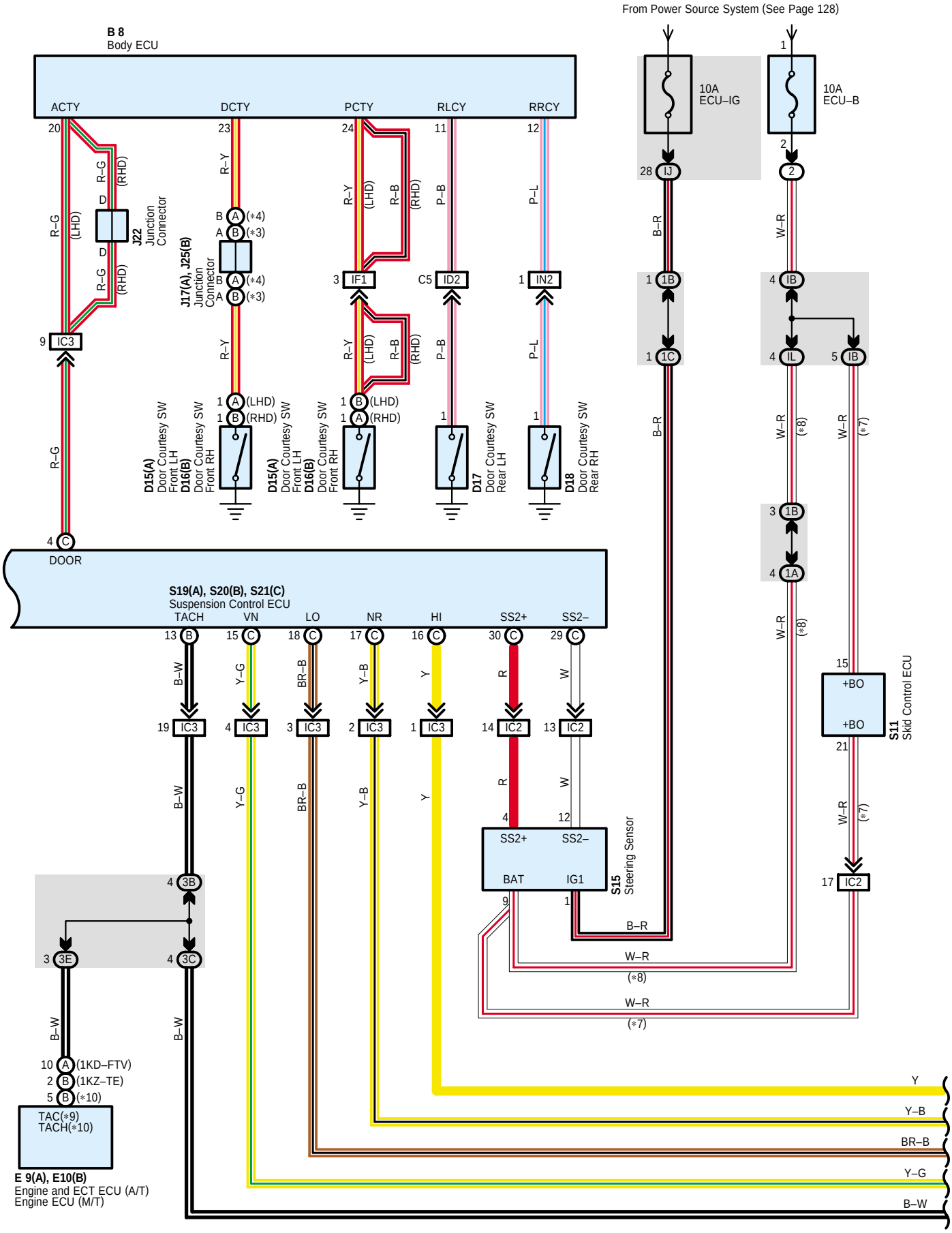
From Power Source System (See Page 128)
B 8
Body ECU
ACTY
DCTY
PCTY
RLCY
RRCY
10A
ECU–IG
10A
ECU–B
J22
Junction
Connector
J17(A), J25(B)
Junction
Connector
IF1
ID2
IN2
IC3
D15(A)
Door Courtesy SW
Front LH
D16(B)
Door Courtesy SW
Front RH
D17
Door Courtesy SW
Rear LH
D18
Door Courtesy SW
Rear RH
DOOR
S19(A), S20(B), S21(C)
Suspension Control ECU
TACH
VN
LO
NR
HI
SS2+
SS2–
IC2
S15
Steering Sensor
BAT
IG1
S11
Skid Control ECU
+BO
E 9(A), E10(B)
Engine and ECT ECU (A/T)
Engine ECU (M/T)
TAC(*9)
TACH(*10)
(1KD–FTV)
(1KZ–TE)
(*10)
(LHD)
(RHD)
(*3)
(*4)
(*7)
(*8)
Y
Y–B
BR–B
Y–G
B–W

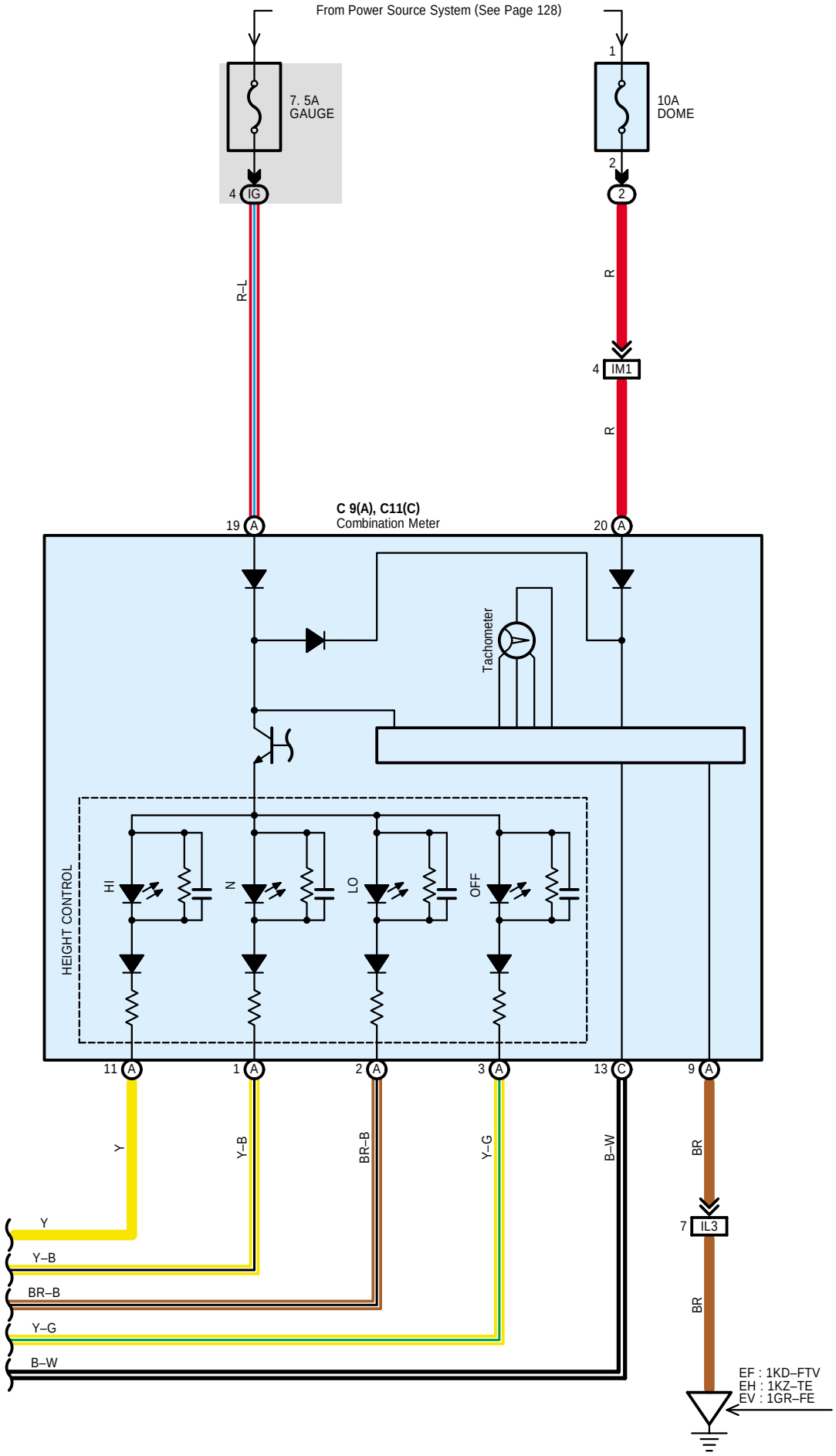
From Power Source System (See Page 128)
7. 5A
GAUGE
10A
DOME
4 IG
1
2
2
R–L
R
4 IM1
R
C 9(A), C11(C)
Combination Meter
19 A
20 A
Tachometer
HEIGHT CONTROL
HI
N
LO
OFF
11 A
1 A
2 A
3 A
13 C
9 A
Y
Y–B
BR–B
Y–G
B–W
BR
7 IL3
BR
Y
Y–B
BR–B
Y–G
B–W
EF : 1KD–FTV
EH : 1KZ–TE
EV : 1GR–FE

System Outline

* The electric modulated suspension with height control, is a system designed to maintain a constant ride height by means of an electro-pneumatic system in the rear suspension - to cope with change in load due to possible change in the number of people and/or the weight of cargo the vehicle has to carry. With three driver's-choice height-control switches on the console, the driver can set ride height to any one of the three different ride height modes (High, normal and low): "High mode" for rough terrain and "Low mode" for passenger to get on or get off, and for cargo to be loaded or unloaded.
* This system has five basic controls as shown below:
* Auto leveling control
  This control maintains a constant rear vehicle ride height regardless of change in load due to possible change in the number of passengers and/or the weight of cargo the vehicle has to carry.
* Ride height switchover control
  This control switches over height mode to the mode selected by the height control switch.
  * High mode (+ 40 mm / 1.6 in.)
  * Low mode (- 20 mm / 0.8 in.)
* Speed sensing control
  Regardless of the initial height mode setting, "High mode" or "Low mode," this control automatically switches over vehicle height mode to the optimum "Normal mode":
  * When the vehicle speed reaches or exceeds 30 km/h with height mode set to "High mode," or;
  * When the vehicle speed reaches or exceeds 5 km/h with height mode set to "Low mode."
* Subsequent control after ignition switch off
  After the ignition switch is turned OFF, this control lowers the rear vehicle ride height to offset rear vehicle ride height elevation due to passengers getting off, etc.
* Height control OFF control
  Pressing the absorber control switch turns the system OFF, making it possible for the vehicle to be jacked up or towed.

Service Hints

S20 (B), S21 (C) Suspension Control ECU

(C) 10-Ground : Approx. 12 volts with the ignition SW at ON position
(C) 1, (B) 5-Ground : Always continuity

: Parts Location

Code	See Page
A12	38 (*1)
	42 (*3)
	44 (*4)
	58 (*10)
	62 (*12)
	64 (*13)
A13	38 (*1)
	42 (*3)
	44 (*4)
	58 (*10)
	62 (*12)
	64 (*13)
A29	48 (LHD)
	68 (RHD)
A43	52 (*6)
	72 (*15)
A44	52 (*6)
	72 (*15)
A45	52 (*6)
	72 (*15)
B8	48 (LHD)
	68 (RHD)
C9 A	49 (LHD)
	69 (RHD)
C11 C	49 (LHD)
	69 (RHD)
D6	49 (LHD)
	69 (RHD)
D15 A	52 (*6)
	54 (*7)
	72 (*15)
	74 (*16)
D16 B	52 (*6)
	54 (*7)

Code	See Page
D16 B	72 (*15)
	74 (*16)
D17	52 (*6)
	72 (*15)
D18	52 (*6)
	72 (*15)
E9 A	49 (LHD)
	69 (RHD)
E10 B	49 (LHD)
	69 (RHD)
H13	50 (LHD)
	70 (RHD)
H14	52 (*6)
	72 (*15)
H15	52 (*6)
	72 (*15)
H17	52 (*6)
	72 (*15)
H18	52 (*6)
	72 (*15)
J2	39 (*1)
	43 (*3)
	45 (*4)
	59 (*10)
	63 (*12)
	65 (*13)
J7 A	50 (LHD)
	70 (RHD)
J8 B	50 (LHD)
	70 (RHD)
J9	50 (LHD)
	70 (RHD)
J12	50 (LHD)
	70 (RHD)

Code	See Page
J14	50 (LHD)
	70 (RHD)
J15	50 (LHD)
	70 (RHD)
J17 A	50 (LHD)
	70 (RHD)
J22	70 (RHD)
J25 B	50 (LHD)
	70 (RHD)
L5	53 (*6)
	73 (*15)
R29	53 (*6)
	73 (*15)
S1	39 (*1)
	43 (*3)
	45 (*4)
	59 (*10)
	63 (*12)
	65 (*13)
S11	51 (LHD)
	71 (RHD)
S13	51 (LHD)
	71 (RHD)
S15	51 (LHD)
	71 (RHD)
S18	51 (LHD)
	71 (RHD)
S19 A	51 (LHD)
	71 (RHD)
S20 B	51 (LHD)
	71 (RHD)
S21 C	51 (LHD)
	71 (RHD)

: Relay Blocks

Code	See Page	Relay Blocks (Relay Block Location)
2	23	Engine Room R/B (Engine Compartment Left)
3	24	Engine Room R/B No.3 (Engine Compartment Left)

* 1 : LHD 1GR-FE * 2 : LHD 3RZ-FE * 3 : LHD 1KD-FTV * 4 : LHD 1KZ-TE * 5 : LHD 5L-E * 6 : LHD 5-Door * 7 : LHD 3-Door
* 8 : LHD 8Way Power Seat * 9 : LHD Except 8Way Power Seat * 10 : RHD 1GR-FE * 11 : RHD 3RZ-FE * 12 : RHD 1KD-FTV
* 13 : RHD 1KZ-TE * 14 : RHD 5L-E * 15 : RHD 5-Door * 16 : RHD 3-Door * 17 : RHD 8Way Power Seat
* 18 : RHD Except 8Way Power Seat

: **Junction Block and Wire Harness Connector**

Code	See Page	Junction Block and Wire Harness (Connector Location)
IB	26 (LHD)	Engine Room Main Wire and Driver Side J/B (Lower Finish Panel)
	28 (RHD)	
IG	27 (LHD)	Instrument Panel Wire and Driver Side J/B (Lower Finish Panel)
	29 (RHD)	
IJ	27 (LHD)	
	29 (RHD)	
IK	27 (LHD)	
	29 (RHD)	
IL	27 (LHD)	
	29 (RHD)	
1A	32 (LHD)	Instrument Panel Wire and J/B No.1 (Instrument Panel Reinforcement Left)
	32 (RHD)	Instrument Panel Wire and J/B No.1 (Instrument Panel Reinforcement Right)
1B	32 (LHD)	Instrument Panel Wire and J/B No.1 (Instrument Panel Reinforcement Left)
	32 (RHD)	Instrument Panel Wire and J/B No.1 (Instrument Panel Reinforcement Right)
1C	32 (LHD)	Instrument Panel Wire and J/B No.1 (Instrument Panel Reinforcement Left)
	32 (RHD)	Instrument Panel Wire and J/B No.1 (Instrument Panel Reinforcement Right)
1E	32 (LHD)	Instrument Panel Wire and J/B No.1 (Instrument Panel Reinforcement Left)
	32 (RHD)	Instrument Panel Wire and J/B No.1 (Instrument Panel Reinforcement Right)
3B	36 (LHD)	Instrument Panel Wire and J/B No.3 (Instrument Panel Reinforcement Right)
	36 (RHD)	Instrument Panel Wire and J/B No.3 (Instrument Panel Reinforcement Left)
3C	36 (LHD)	Instrument Panel Wire and J/B No.3 (Instrument Panel Reinforcement Right)
	36 (RHD)	Instrument Panel Wire and J/B No.3 (Instrument Panel Reinforcement Left)
3E	36 (LHD)	Instrument Panel Wire and J/B No.3 (Instrument Panel Reinforcement Right)
	36 (RHD)	Instrument Panel Wire and J/B No.3 (Instrument Panel Reinforcement Left)

: **Connector Joining Wire Harness and Wire Harness**

Code	See Page	Joining Wire Harness and Wire Harness (Connector Location)
EC1	78 (*1)	Sensor Wire RH and Engine Room Main Wire (Near the Air Cleaner)
	82 (*3)	
	84 (*4)	
	102 (*10)	
	106 (*12)	
	108 (*13)	
ED1	78 (*1)	Sensor Wire LH and Engine Room Main Wire (Near the Engine Room R/B)
	82 (*3)	
	84 (*4)	
	102 (*10)	
	106 (*12)	
	108 (*13)	
IB1	88 (LHD)	Floor No.2 Wire and Engine Room Main Wire (Left Kick Panel)
	112 (RHD)	
IB2	88 (LHD)	
	112 (RHD)	
IC2	88 (LHD)	Instrument Panel Wire and Engine Room Main Wire (Left Kick Panel)
	112 (RHD)	
IC3	88 (LHD)	
	112 (RHD)	
IC4	88 (LHD)	
	112 (RHD)	
ID2	90 (LHD)	Instrument Panel Wire and Floor No.2 Wire (Left Kick Panel)
	114 (RHD)	
IF1	90 (LHD)	Instrument Panel Wire and Instrument Panel Wire (Near the J/B No.1)
	114 (RHD)	
IJ1	92 (LHD)	Instrument Panel Wire and Switch Wire (Front Side of the Console Box)
	116 (RHD)	
IL3	92 (LHD)	Engine Wire and Instrument Panel Wire (Right Side of the Blower Unit)
	116 (RHD)	Engine Wire and Instrument Panel Wire (Left Side of the Blower Unit)
IM1	92 (LHD)	Instrument Panel Wire and Engine Room Main Wire (Right Kick Panel)
	116 (RHD)	
IN2	94 (LHD)	Instrument Panel Wire and Floor Wire (Right Kick Panel)
	118 (RHD)	
IN4	94 (LHD)	
BC1	96 (*6)	Frame Wire and Floor No.2 Wire (Under the Left Side of Rear Seat Cushion)
	120 (*15)	
BC2	96 (*6)	
	120 (*15)	

* 1 : LHD 1GR-FE * 2 : LHD 3RZ-FE * 3 : LHD 1KD-FTV * 4 : LHD 1KZ-TE * 5 : LHD 5L-E * 6 : LHD 5-Door * 7 : LHD 3-Door
* 8 : LHD 8Way Power Seat * 9 : LHD Except 8Way Power Seat * 10 : RHD 1GR-FE * 11 : RHD 3RZ-FE * 12 : RHD 1KD-FTV
* 13 : RHD 1KZ-TE * 14 : RHD 5L-E * 15 : RHD 5-Door * 16 : RHD 3-Door * 17 : RHD 8Way Power Seat
* 18 : RHD Except 8Way Power Seat

▽ : **Ground Points**

Code	See Page	Ground Points Location
EA	78 (*1)	Front Right Fender
	82 (*3)	
	84 (*4)	
	102 (*10)	
	106 (*12)	
	108 (*13)	
EB	78 (*1)	Front Left Fender
	82 (*3)	
	84 (*4)	
	102 (*10)	
	106 (*12)	
	108 (*13)	
EF	82 (*3)	Rear Part of Cylinder Block
	106 (*12)	
EH	84 (*4)	
	108 (*13)	
EV	78 (*1)	Rear Side of Left Bank Cylinder Block
	102 (*10)	
IJ	88 (LHD)	Left Kick Panel
	112 (RHD)	Right Kick Panel
IL	88 (LHD)	Near the Right Side of Steering Column
	112 (RHD)	Instrument Panel Brace RH
BQ	96 (*6)	Near the Left Side of No.5 Cross Member
	120 (*15)	

◯ : **Splice Points**

Code	See Page	Wire Harness with Splice Points	Code	See Page	Wire Harness with Splice Points
I3	90 (LHD)	Instrument Panel Wire	B3	98 (*6)	Frame Wire
	114 (RHD)			122 (*15)	

* 1 : LHD 1GR-FE * 2 : LHD 3RZ-FE * 3 : LHD 1KD-FTV * 4 : LHD 1KZ-TE * 5 : LHD 5L-E * 6 : LHD 5-Door * 7 : LHD 3-Door
* 8 : LHD 8Way Power Seat * 9 : LHD Except 8Way Power Seat * 10 : RHD 1GR-FE * 11 : RHD 3RZ-FE * 12 : RHD 1KD-FTV
* 13 : RHD 1KZ-TE * 14 : RHD 5L-E * 15 : RHD 5-Door * 16 : RHD 3-Door * 17 : RHD 8Way Power Seat
* 18 : RHD Except 8Way Power Seat

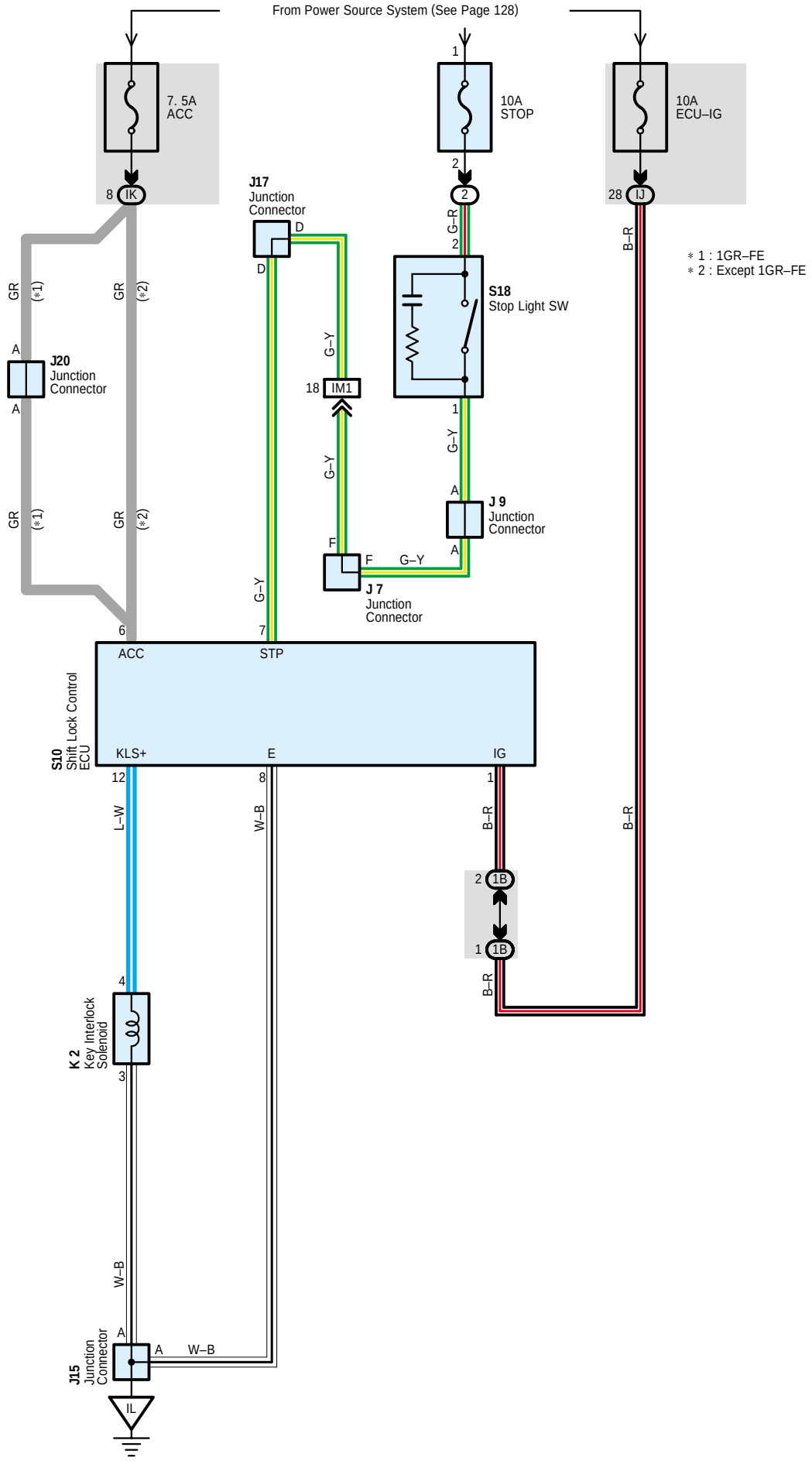
From Power Source System (See Page 128)
7. 5A
ACC
8 IK
10A
STOP
1
2
10A
ECU–IG
28 IJ
J17
Junction
Connector
D
D
G–R
2
B–R
＊1 : 1GR–FE
＊2 : Except 1GR–FE
S18
Stop Light SW
1
GR
(＊1)
GR
(＊2)
A
J20
Junction
Connector
A
G–Y
18 IM1
G–Y
G–Y
A
J 9
Junction
Connector
A
F
F
G–Y
J 7
Junction
Connector
G–Y
6
ACC
7
STP
S10
Shift Lock Control
ECU
KLS+
E
IG
12
8
1
L–W
W–B
B–R
B–R
2 1B
1 1B
B–R
4
K 2
Key Interlock
Solenoid
3
W–B
A
J15
Junction
Connector
A
W–B
IL

System Outline

When the ignition SW is turned to ACC position the current from the ACC fuse flows to TERMINAL 6 of the shift lock control ECU. When the ignition SW is turned to ON position, the current from the ECU–IG fuse flows to TERMINAL 1 of the shift lock control ECU.

1. Shift Lock Mechanism

If the brake pedal is depressed with the ignition SW set at ON (The stop light SW is on), the shift lock control ECU is activated, allowing the driver to change the shift lever to a position other than the P position.

2. Key Interlock Mechanism

With the ignition SW at ON or ACC position, when the shift lever is put in P position, the current flowing from TERMINAL 12 of the shift lock control ECU to key interlock solenoid is cut off. This causes the key interlock solenoid to turn off (Lock lever disengages from LOCK position) and the ignition key can be turned from ACC to LOCK position.

Service Hints

S10 Shift Lock Control ECU

6–Ground : Approx. 12 volts with the ignition SW at ACC or ON position
1–Ground : Approx. 12 volts with the ignition SW at ON position
8–Ground : Always continuity
7–Ground : Approx. 12 volts with the brake pedal depressed

: Parts Location

Code	See Page	Code	See Page	Code	See Page
J7	50 (LHD)	J17	50 (LHD)	S10	51 (LHD)
	70 (RHD)		70 (RHD)		71 (RHD)
J9	50 (LHD)	J20	50 (LHD)	S18	51 (LHD)
	70 (RHD)		70 (RHD)		71 (RHD)
J15	50 (LHD)	K2	50 (LHD)		
	70 (RHD)		70 (RHD)		

: Relay Blocks

Code	See Page	Relay Blocks (Relay Block Location)
2	23	Engine Room R/B (Engine Compartment Left)

: Junction Block and Wire Harness Connector

Code	See Page	Junction Block and Wire Harness (Connector Location)
IJ	27 (LHD)	Instrument Panel Wire and Driver Side J/B (Lower Finish Panel)
	29 (RHD)	
IK	27 (LHD)	
	29 (RHD)	
1B	32 (LHD)	Instrument Panel Wire and J/B No.1 (Instrument Panel Reinforcement Left)
	32 (RHD)	Instrument Panel Wire and J/B No.1 (Instrument Panel Reinforcement Right)

: Connector Joining Wire Harness and Wire Harness

Code	See Page	Joining Wire Harness and Wire Harness (Connector Location)
IM1	92 (LHD)	Instrument Panel Wire and Engine Room Main Wire (Right Kick Panel)
	116 (RHD)	

: Ground Points

Code	See Page	Ground Points Location
IL	88 (LHD)	Near the Right Side of Steering Column
	112 (RHD)	Instrument Panel Brace RH

Center Differential Lock

From Power Source System (See Page 128)

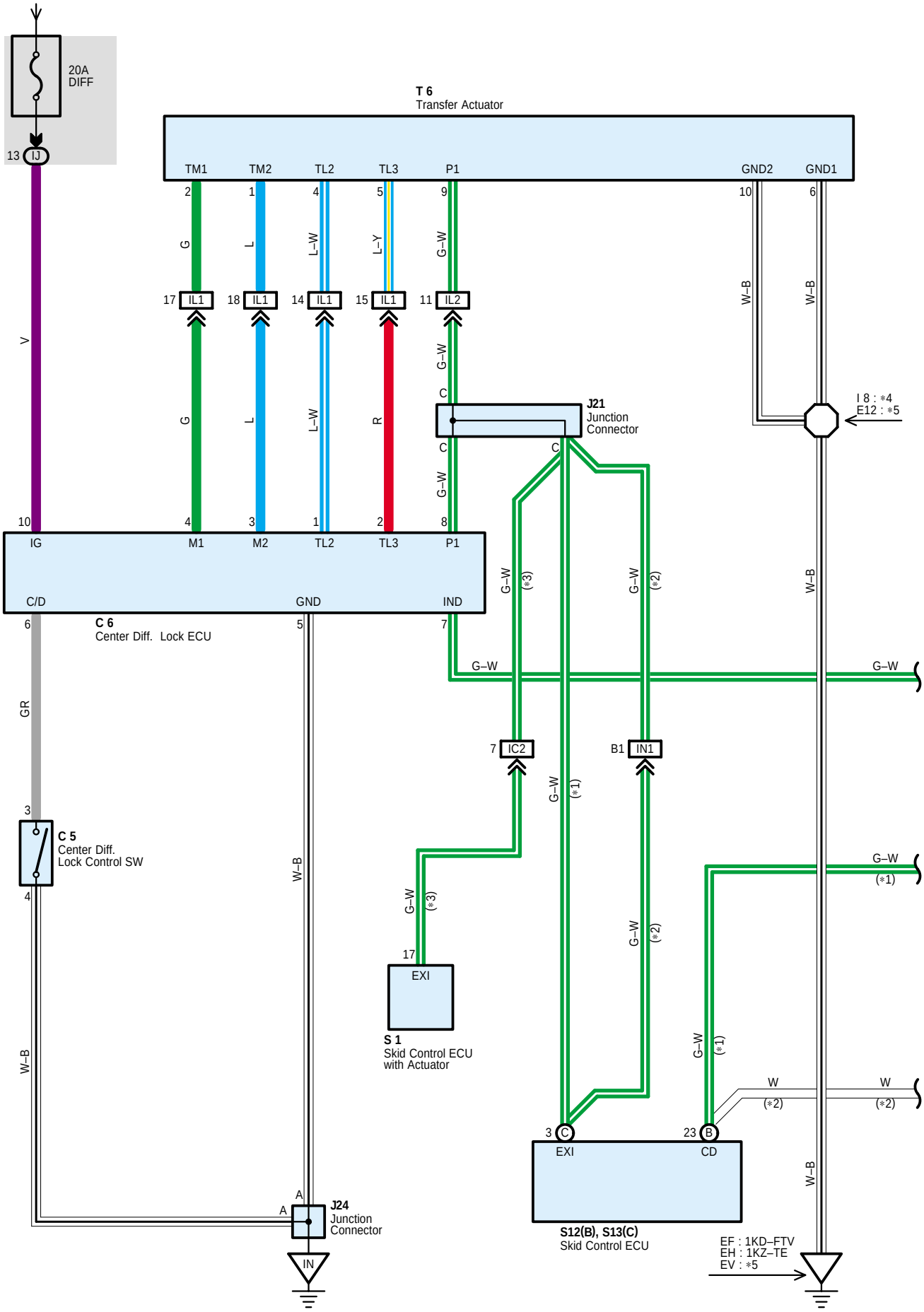

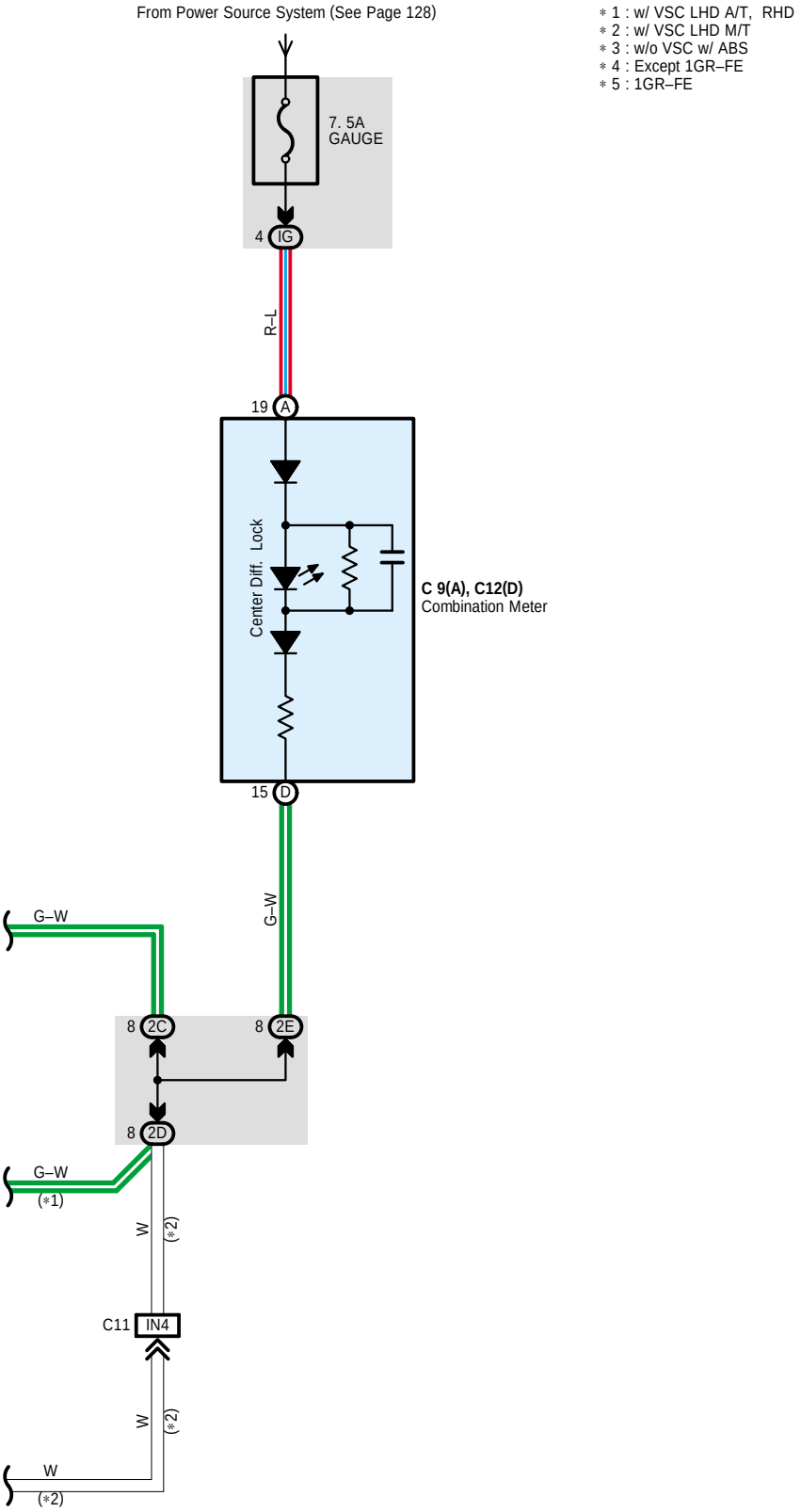

* 1 : w/ VSC LHD A/T, RHD
* 2 : w/ VSC LHD M/T
* 3 : w/o VSC w/ ABS
* 4 : Except 1GR–FE
* 5 : 1GR–FE

Center Differential Lock

System Outline

Operating the center differential lock control switch located in the center console, the center differential lock ECU operates the motor in the transfer actuator, slides the shift fork shaft and switches to the differential lock condition or differential free condition.

Service Hints

C6 Center Diff. Lock ECU

10–Ground : Approx. 12 volts with the ignition SW at ON position
5–Ground : Always continuity

: Parts Location

Code		See Page	Code		See Page	Code		See Page
C5		49 (LHD)	J24		50 (LHD)	S13	C	51 (LHD)
		69 (RHD)			70 (RHD)			71 (RHD)
C6		49 (LHD)	S1		39 (*1)	T6		39 (*1)
		69 (RHD)			43 (*3)			43 (*3)
C9	A	49 (LHD)			45 (*4)			45 (*4)
		69 (RHD)			59 (*10)			59 (*10)
C12	D	49 (LHD)			63 (*12)			63 (*12)
		69 (RHD)			65 (*13)			65 (*13)
J21		50 (LHD)	S12	B	51 (LHD)			
		70 (RHD)			71 (RHD)			

: Junction Block and Wire Harness Connector

Code	See Page	Junction Block and Wire Harness (Connector Location)
IG	27 (LHD)	Instrument Panel Wire and Driver Side J/B (Lower Finish Panel)
	29 (RHD)	
IJ	27 (LHD)	
	29 (RHD)	
2C	34	Instrument Panel Wire and J/B No.2 (Instrument Panel Reinforcement Center)
2D		
2E		

: Connector Joining Wire Harness and Wire Harness

Code	See Page	Joining Wire Harness and Wire Harness (Connector Location)
IC2	88 (LHD)	Instrument Panel Wire and Engine Room Main Wire (Left Kick Panel)
	112 (RHD)	
IL1	92 (LHD)	Engine Wire and Instrument Panel Wire (Right Side of the Blower Unit)
	116 (RHD)	Engine Wire and Instrument Panel Wire (Left Side of the Blower Unit)
IL2	92 (LHD)	Engine Wire and Instrument Panel Wire (Right Side of the Blower Unit)
	116 (RHD)	Engine Wire and Instrument Panel Wire (Left Side of the Blower Unit)
IN1	94 (LHD)	Instrument Panel Wire and Floor Wire (Right Kick Panel)
IN4		

* 1 : LHD 1GR–FE * 2 : LHD 3RZ–FE * 3 : LHD 1KD–FTV * 4 : LHD 1KZ–TE * 5 : LHD 5L–E * 6 : LHD 5–Door * 7 : LHD 3–Door
* 8 : LHD 8Way Power Seat * 9 : LHD Except 8Way Power Seat * 10 : RHD 1GR–FE * 11 : RHD 3RZ–FE * 12 : RHD 1KD–FTV
* 13 : RHD 1KZ–TE * 14 : RHD 5L–E * 15 : RHD 5–Door * 16 : RHD 3–Door * 17 : RHD 8Way Power Seat
* 18 : RHD Except 8Way Power Seat

▽ : **Ground Points**

Code	See Page	Ground Points Location
EF	82 (*3)	Rear Part of Cylinder Block
	106 (*12)	
EH	84 (*4)	
	108 (*13)	
EV	78 (*1)	Rear Side of Left Bank Cylinder Block
	102 (*10)	
IN	88 (LHD)	Right Kick Panel
	112 (RHD)	Left Kick Panel

⬡ : **Splice Points**

Code	See Page	Wire Harness with Splice Points	Code	See Page	Wire Harness with Splice Points
E12	78 (*1)	Engine Wire	I8	90 (LHD)	Engine Wire
	102 (*10)			114 (RHD)	

* 1 : LHD 1GR-FE * 2 : LHD 3RZ-FE * 3 : LHD 1KD-FTV * 4 : LHD 1KZ-TE * 5 : LHD 5L-E * 6 : LHD 5-Door * 7 : LHD 3-Door
* 8 : LHD 8Way Power Seat * 9 : LHD Except 8Way Power Seat * 10 : RHD 1GR-FE * 11 : RHD 3RZ-FE * 12 : RHD 1KD-FTV
* 13 : RHD 1KZ-TE * 14 : RHD 5L-E * 15 : RHD 5-Door * 16 : RHD 3-Door * 17 : RHD 8Way Power Seat
* 18 : RHD Except 8Way Power Seat

Rear Differential Lock

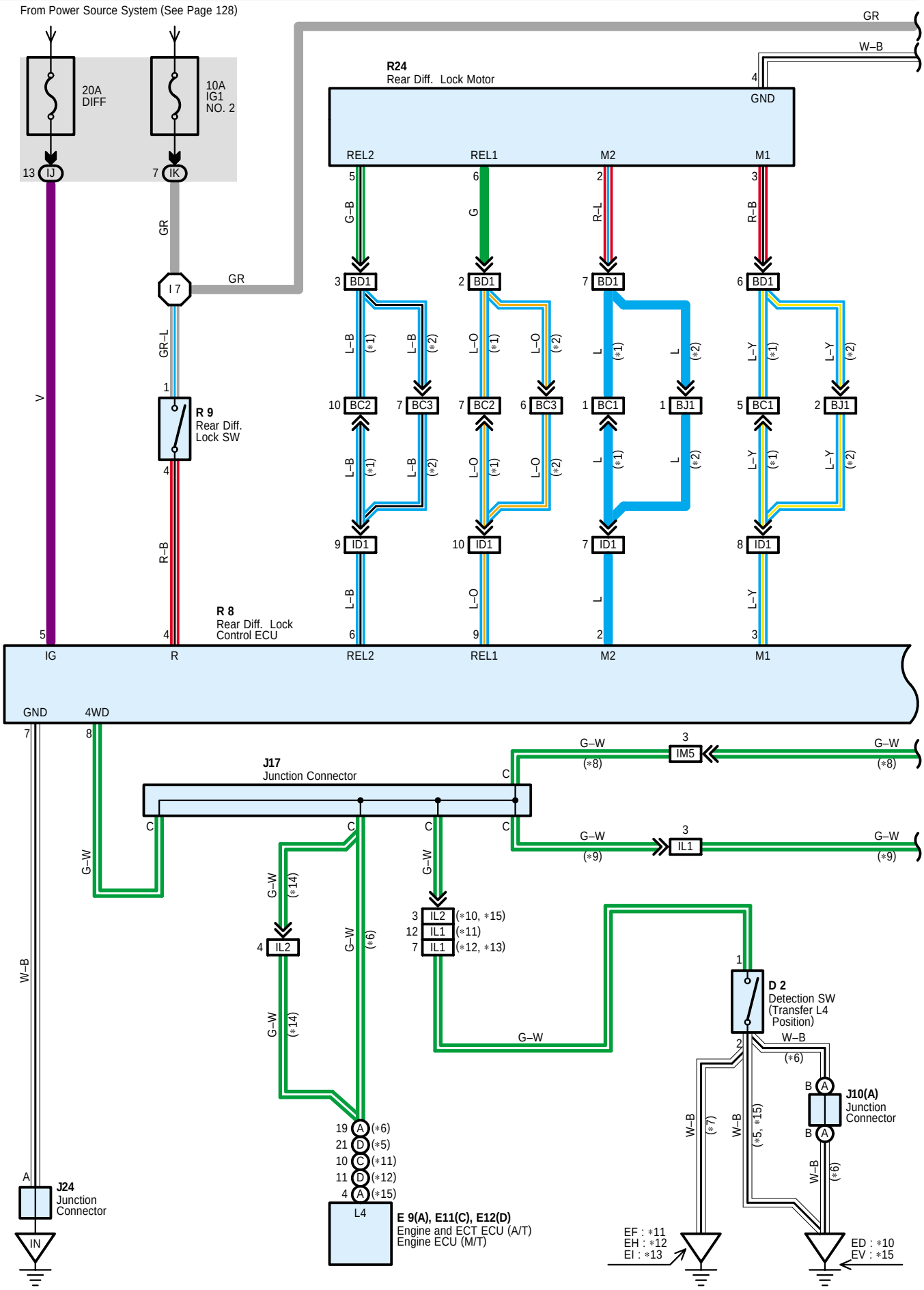

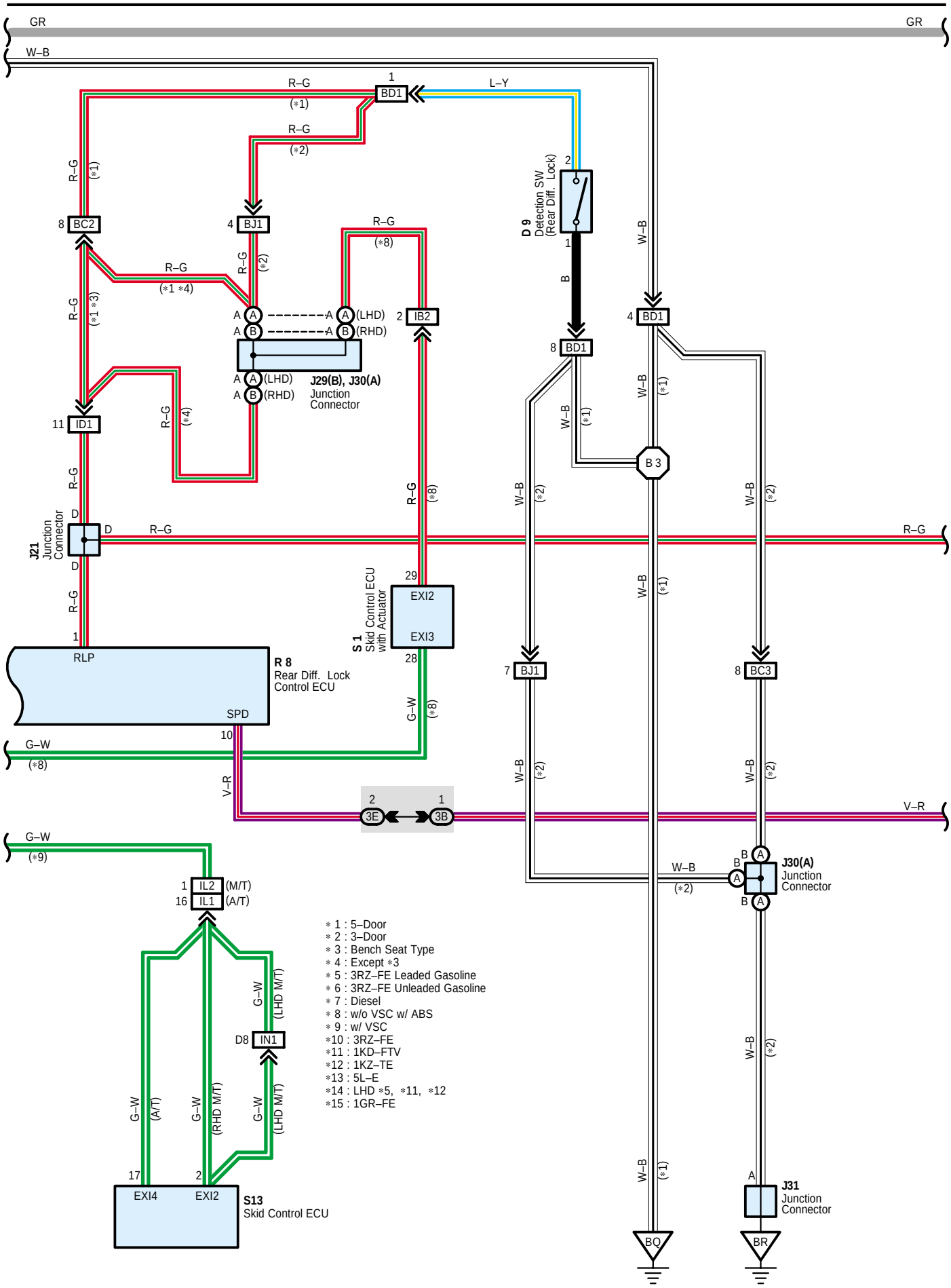
GR
GR
W–B
R–G
(*1)
1
BD1
L–Y
R–G
(*2)
2
D 9
Detection SW
(Rear Diff. Lock)
1
B
8 BC2
4 BJ1
R–G
(*8)
R–G
(*1 *4)
R–G
(*2)
R–G
(*1 *3)
A (LHD)
A (RHD)
2 IB2
J29(B), J30(A)
Junction
Connector
4 BD1
8 BD1
W–B
(*1)
11 ID1
R–G
(*4)
B 3
R–G
(*8)
W–B
(*2)
J21
Junction
Connector
D
R–G
29
EXI2
EXI3
S 1
Skid Control ECU
with Actuator
28
1
RLP
R 8
Rear Diff. Lock
Control ECU
SPD
10
G–W
(*8)
7 BJ1
8 BC3
V–R
2
3E
1
3B
G–W
(*9)
1 IL2 (M/T)
16 IL1 (A/T)
B
A
J30(A)
Junction
Connector
D8 IN1
G–W
(LHD M/T)
G–W
(A/T)
G–W
(RHD M/T)
17
EXI4
EXI2
S13
Skid Control ECU
J31
Junction
Connector
BQ
BR
* 1 : 5–Door
* 2 : 3–Door
* 3 : Bench Seat Type
* 4 : Except *3
* 5 : 3RZ–FE Leaded Gasoline
* 6 : 3RZ–FE Unleaded Gasoline
* 7 : Diesel
* 8 : w/o VSC w/ ABS
* 9 : w/ VSC
*10 : 3RZ–FE
*11 : 1KD–FTV
*12 : 1KZ–TE
*13 : 5L–E
*14 : LHD *5, *11, *12
*15 : 1GR–FE

Rear Differential Lock

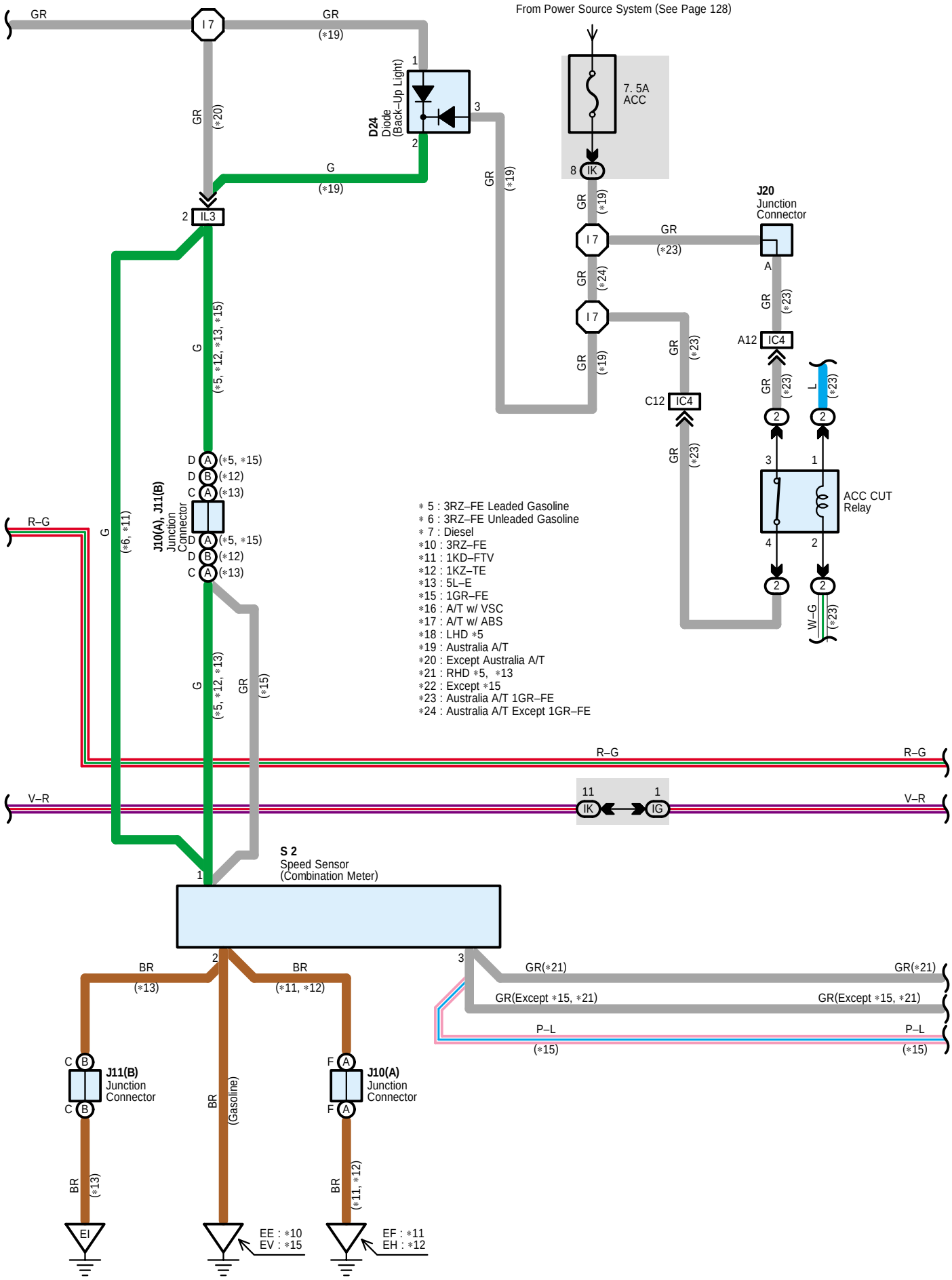

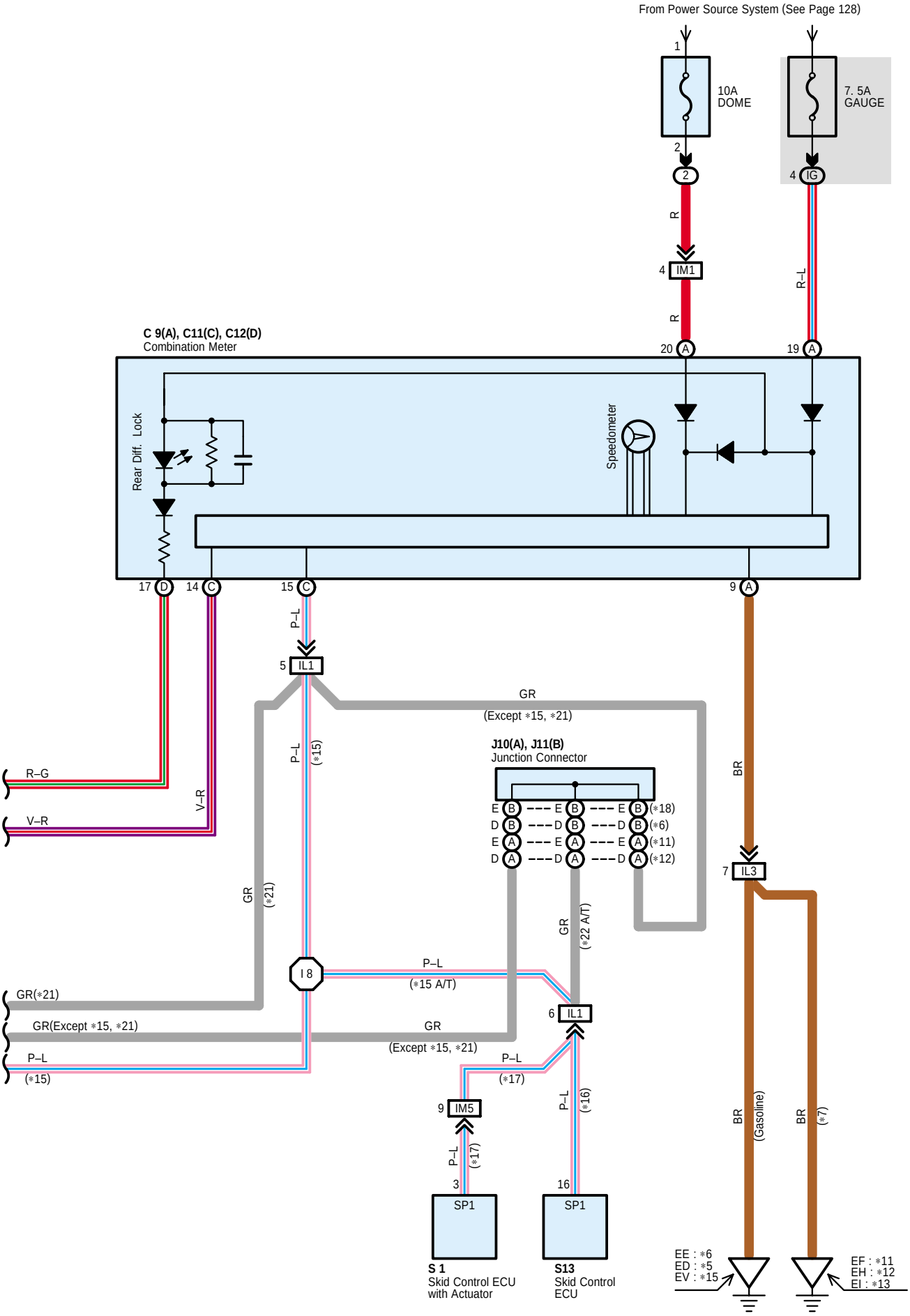
From Power Source System (See Page 128)
10A
DOME
7. 5A
GAUGE
IM1
R
R–L
C 9(A), C11(C), C12(D)
Combination Meter
Rear Diff. Lock
Speedometer
P–L
IL1
GR
(Except ∗15, ∗21)
J10(A), J11(B)
Junction Connector
(∗18)
(∗6)
(∗11)
(∗12)
BR
IL3
R–G
V–R
GR
(∗21)
(∗15)
(∗22 A/T)
I 8
P–L
(∗15 A/T)
GR(∗21)
GR(Except ∗15, ∗21)
(∗17)
IM5
(∗16)
SP1
S 1
Skid Control ECU
with Actuator
S13
Skid Control
ECU
(Gasoline)
(∗7)
EE : ∗6
ED : ∗5
EV : ∗15
EF : ∗11
EH : ∗12
EI : ∗13

Rear Differential Lock

System Outline

Operation the rear differential lock control switch located in the driver side instrument panel, the rear differential lock ECU operated the rear differential lock motor, moves the shift fork to the right and the left, and switches to the differential lock condition or differential free condition.

Service Hints

R8 Rear Diff. Lock Control ECU

5–Ground : Approx. 12 volts with the ignition SW at ON position
7–Ground : Always continuity

○ : Parts Location

Code		See Page
C9	A	49 (LHD)
		69 (RHD)
C11	C	49 (LHD)
		69 (RHD)
C12	D	49 (LHD)
		69 (RHD)
D2		38 (*1)
		40 (*2)
		42 (*3)
		44 (*4)
		46 (*5)
		58 (*10)
		60 (*11)
		62 (*12)
		64 (*13)
		66 (*14)
D9		52 (*6)
		54 (*7)
		72 (*15)
		74 (*16)
D24		69 (RHD)
E9	A	49 (LHD)
		69 (RHD)
E11	C	49 (LHD)
		69 (RHD)
E12	D	49 (LHD)

Code		See Page
E12	D	69 (RHD)
J10	A	50 (LHD)
		70 (RHD)
J11	B	50 (LHD)
		70 (RHD)
J17		50 (LHD)
		70 (RHD)
J20		50 (LHD)
		70 (RHD)
J21		50 (LHD)
		70 (RHD)
J24		50 (LHD)
		70 (RHD)
J29	B	72 (*15)
		74 (*16)
J30	A	52 (*6)
		54 (*7)
		72 (*15)
		74 (*16)
J31		52 (*6)
		54 (*7)
		72 (*15)
		74 (*16)
R8		51 (LHD)
		71 (RHD)
R9		51 (LHD)

Code	See Page
R9	71 (RHD)
R24	53 (*6)
	55 (*7)
	73 (*15)
	75 (*16)
S1	39 (*1)
	41 (*2)
	43 (*3)
	45 (*4)
	59 (*10)
	61 (*11)
	63 (*12)
	65 (*13)
S2	39 (*1)
	41 (*2)
	43 (*3)
	45 (*4)
	47 (*5)
	59 (*10)
	61 (*11)
	63 (*12)
	65 (*13)
	67 (*14)
S13	51 (LHD)
	71 (RHD)

▭ : Relay Blocks

Code	See Page	Relay Blocks (Relay Block Location)
2	23	Engine Room R/B (Engine Compartment Left)

* 1 : LHD 1GR–FE * 2 : LHD 3RZ–FE * 3 : LHD 1KD–FTV * 4 : LHD 1KZ–TE * 5 : LHD 5L–E * 6 : LHD 5–Door * 7 : LHD 3–Door
* 8 : LHD 8Way Power Seat * 9 : LHD Except 8Way Power Seat * 10 : RHD 1GR–FE * 11 : RHD 3RZ–FE * 12 : RHD 1KD–FTV
* 13 : RHD 1KZ–TE * 14 : RHD 5L–E * 15 : RHD 5–Door * 16 : RHD 3–Door * 17 : RHD 8Way Power Seat
* 18 : RHD Except 8Way Power Seat

: **Junction Block and Wire Harness Connector**

Code	See Page	Junction Block and Wire Harness (Connector Location)
IG	27 (LHD)	Instrument Panel Wire and Driver Side J/B (Lower Finish Panel)
	29 (RHD)	
IJ	27 (LHD)	
	29 (RHD)	
IK	27 (LHD)	
	29 (RHD)	
3B	36 (LHD)	Instrument Panel Wire and J/B No.3 (Instrument Panel Reinforcement Right)
	36 (RHD)	Instrument Panel Wire and J/B No.3 (Instrument Panel Reinforcement Left)
3E	36 (LHD)	Instrument Panel Wire and J/B No.3 (Instrument Panel Reinforcement Right)
	36 (RHD)	Instrument Panel Wire and J/B No.3 (Instrument Panel Reinforcement Left)

: **Connector Joining Wire Harness and Wire Harness**

Code	See Page	Joining Wire Harness and Wire Harness (Connector Location)
IB2	88 (LHD)	Floor No.2 Wire and Engine Room Main Wire (Left Kick Panel)
	112 (RHD)	
IC4	112 (RHD)	Instrument Panel Wire and Engine Room Main Wire (Left Kick Panel)
ID1	90 (LHD)	Instrument Panel Wire and Floor No.2 Wire (Left Kick Panel)
	114 (RHD)	
IL1	92 (LHD)	Engine Wire and Instrument Panel Wire (Right Side of the Blower Unit)
	116 (RHD)	Engine Wire and Instrument Panel Wire (Left Side of the Blower Unit)
IL2	92 (LHD)	Engine Wire and Instrument Panel Wire (Right Side of the Blower Unit)
	116 (RHD)	Engine Wire and Instrument Panel Wire (Left Side of the Blower Unit)
IL3	92 (LHD)	Engine Wire and Instrument Panel Wire (Right Side of the Blower Unit)
	116 (RHD)	Engine Wire and Instrument Panel Wire (Left Side of the Blower Unit)
IM1	92 (LHD)	Instrument Panel Wire and Engine Room Main Wire (Right Kick Panel)
	116 (RHD)	
IM5	92 (LHD)	
	116 (RHD)	
IN1	94 (LHD)	Instrument Panel Wire and Floor Wire (Right Kick Panel)
BC1	96 (*6)	Frame Wire and Floor No.2 Wire (Under the Left Side of Rear Seat Cushion)
	120 (*15)	
BC2	96 (*6)	
	120 (*15)	
BC3	100 (*7)	Floor No.2 Wire and Frame Wire (Frame Side Rail LH)
	124 (*16)	
BD1	96 (*6)	Frame Wire and Differential Wire (Left Side of the No.6 Cross Member)
	100 (*7)	
	120 (*15)	
	124 (*16)	
BJ1	100 (*7)	Floor No.2 Wire and Frame Wire (Frame Side Rail LH)
	124 (*16)	

* 1 : LHD 1GR-FE * 2 : LHD 3RZ-FE * 3 : LHD 1KD-FTV * 4 : LHD 1KZ-TE * 5 : LHD 5L-E * 6 : LHD 5-Door * 7 : LHD 3-Door
* 8 : LHD 8Way Power Seat * 9 : LHD Except 8Way Power Seat * 10 : RHD 1GR-FE * 11 : RHD 3RZ-FE * 12 : RHD 1KD-FTV
* 13 : RHD 1KZ-TE * 14 : RHD 5L-E * 15 : RHD 5-Door * 16 : RHD 3-Door * 17 : RHD 8Way Power Seat
* 18 : RHD Except 8Way Power Seat

▽ : **Ground Points**

Code	See Page	Ground Points Location
ED	80 (*2)	Ignition Coil Bracket
	104 (*11)	
EE	80 (*2)	Intake Manifold
	104 (*11)	
EF	82 (*3)	Rear Part of Cylinder Block
	106 (*12)	
EH	84 (*4)	
	108 (*13)	
EI	86 (*5)	
	110 (*14)	
EV	78 (*1)	Rear Side of Left Bank Cylinder Block
	102 (*10)	
IN	88 (LHD)	Right Kick Panel
	112 (RHD)	Left Kick Panel
BQ	96 (*6)	Near the Left Side of No.5 Cross Member
	120 (*15)	
BR	96 (*6)	Left Quarter Panel Inner
	100 (*7)	
	120 (*15)	
	124 (*16)	

○ : **Splice Points**

Code	See Page	Wire Harness with Splice Points	Code	See Page	Wire Harness with Splice Points
I7	90 (LHD)	Instrument Panel Wire	I8	114 (RHD)	Engine Wire
	114 (RHD)		B3	98 (*6)	Frame Wire
I8	90 (LHD)	Engine Wire		122 (*15)	

* 1 : LHD 1GR-FE * 2 : LHD 3RZ-FE * 3 : LHD 1KD-FTV * 4 : LHD 1KZ-TE * 5 : LHD 5L-E * 6 : LHD 5-Door * 7 : LHD 3-Door
* 8 : LHD 8Way Power Seat * 9 : LHD Except 8Way Power Seat * 10 : RHD 1GR-FE * 11 : RHD 3RZ-FE * 12 : RHD 1KD-FTV
* 13 : RHD 1KZ-TE * 14 : RHD 5L-E * 15 : RHD 5-Door * 16 : RHD 3-Door * 17 : RHD 8Way Power Seat
* 18 : RHD Except 8Way Power Seat

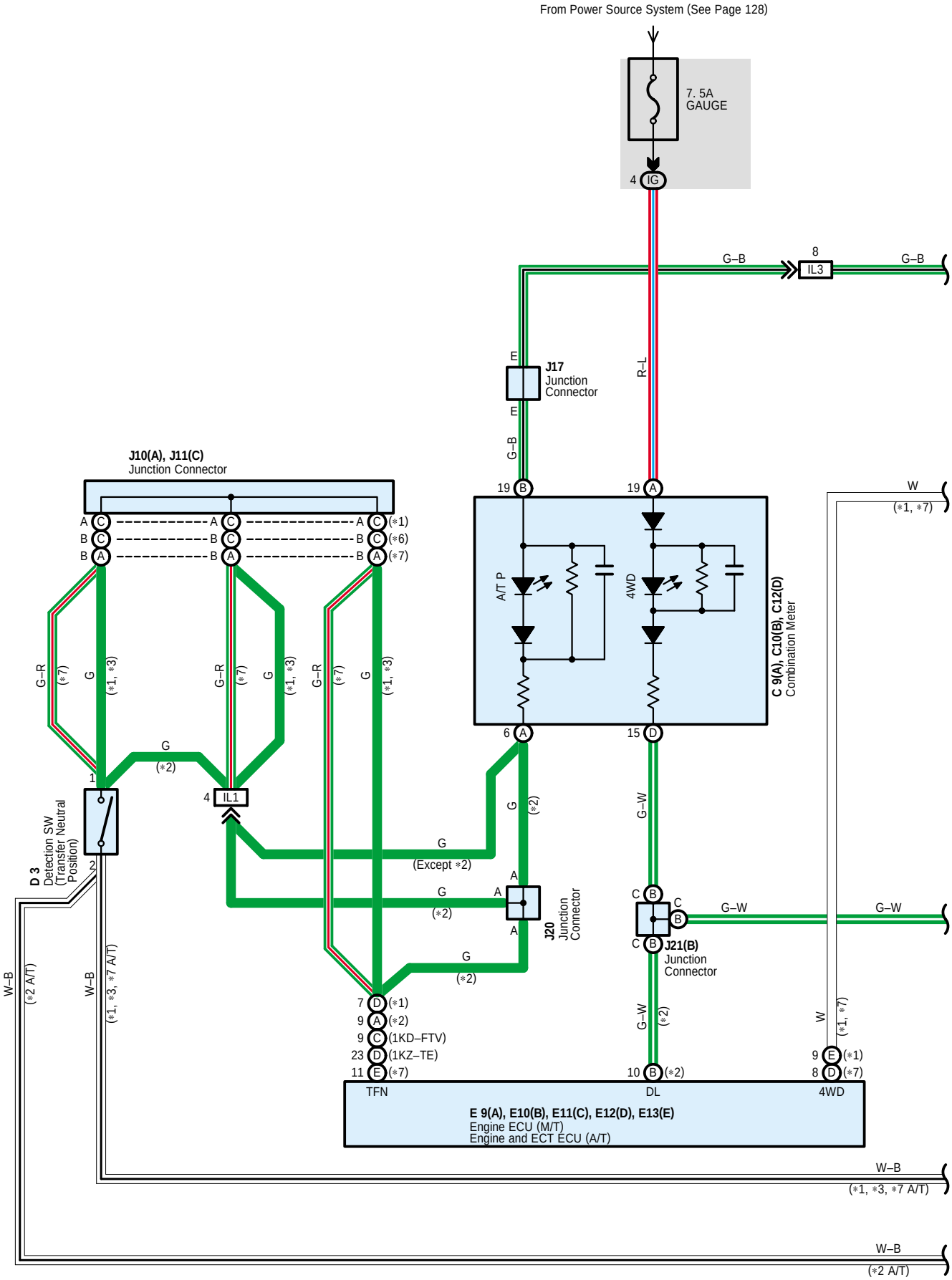
From Power Source System (See Page 128)
7. 5A
GAUGE
4 IG
G–B
8
IL3
G–B
E
J17
Junction
Connector
E
G–B
R–L
J10(A), J11(C)
Junction Connector
A C
B C
B A
(*1)
(*6)
(*7)
19 B
19 A
W
(*1, *7)
A/T P
4WD
C 9(A), C10(B), C12(D)
Combination Meter
G–R
(*7)
G
(*1, *3)
6 A
15 D
G
(*2)
1
4 IL1
G
(*2)
G–W
D 3
Detection SW
(Transfer Neutral
Position)
2
G
(Except *2)
A
A
J20
Junction
Connector
C B
C B
G–W
G–W
C B J21(B)
Junction
Connector
W–B
(*2 A/T)
W–B
(*1, *3, *7 A/T)
7 D (*1)
9 A (*2)
9 C (1KD–FTV)
23 D (1KZ–TE)
11 E (*7)
10 B (*2)
9 E (*1)
8 D (*7)
TFN
DL
4WD
E 9(A), E10(B), E11(C), E12(D), E13(E)
Engine ECU (M/T)
Engine and ECT ECU (A/T)
W–B
(*1, *3, *7 A/T)
W–B
(*2 A/T)

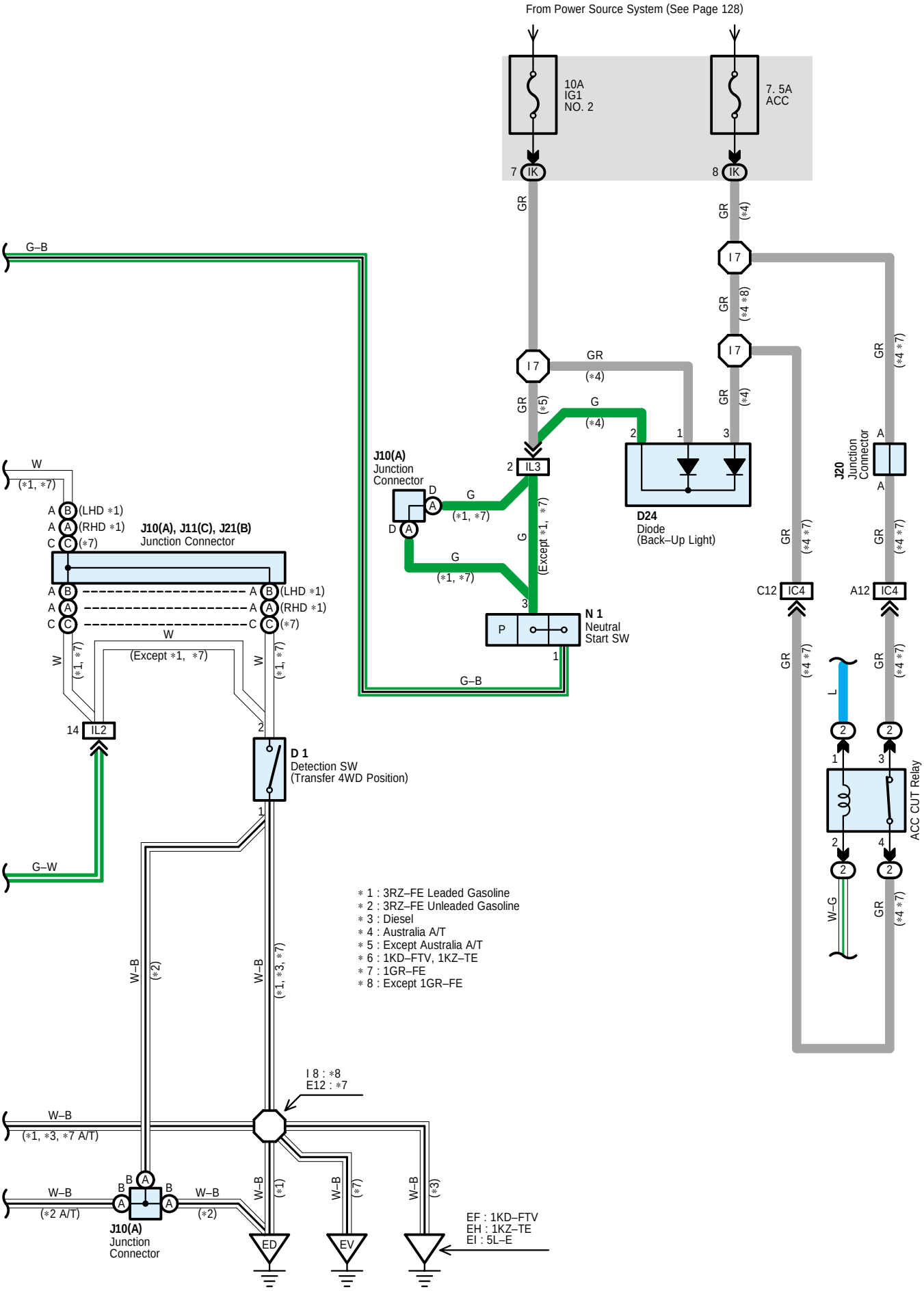
From Power Source System (See Page 128)
10A
IG1
NO. 2
7. 5A
ACC
7 IK
8 IK
GR
(*4)
I 7
(*4 *8)
(*5)
G
(*4)
2 IL3
J10(A)
Junction
Connector
D
A
(*1, *7)
(Except *1, *7)
D24
Diode
(Back–Up Light)
N 1
Neutral
Start SW
P
G–B
W
(*1, *7)
A B (LHD *1)
A A (RHD *1)
C C (*7)
J10(A), J11(C), J21(B)
Junction Connector
(Except *1, *7)
14 IL2
D 1
Detection SW
(Transfer 4WD Position)
G–W
J20
Junction
Connector
C12 IC4
A12 IC4
L
W–G
ACC CUT Relay
* 1 : 3RZ–FE Leaded Gasoline
* 2 : 3RZ–FE Unleaded Gasoline
* 3 : Diesel
* 4 : Australia A/T
* 5 : Except Australia A/T
* 6 : 1KD–FTV, 1KZ–TE
* 7 : 1GR–FE
* 8 : Except 1GR–FE
W–B
(*2)
(*1, *3, *7)
I 8 : *8
E12 : *7
(*1, *3, *7 A/T)
(*2 A/T)
J10(A)
Junction
Connector
ED
EV
(*1)
(*7)
(*3)
EF : 1KD–FTV
EH : 1KZ–TE
EI : 5L–E

Service Hints

N1 Neutral Start SW
3–1 : Closed with A/T shift lever at P position

D3 Detection SW (Transfer Neutral Position)
1–2 : Closed with transfer position at N position

: Parts Location

Code		See Page	Code		See Page	Code		See Page
C9	A	49 (LHD)	D3		42 (*3)	J10	A	70 (RHD)
		69 (RHD)			44 (*4)	J11	C	50 (LHD)
C10	B	49 (LHD)			58 (*10)			70 (RHD)
		69 (RHD)			60 (*11)	J17		50 (LHD)
C12	D	49 (LHD)			62 (*12)			70 (RHD)
		69 (RHD)			64 (*13)	J20		50 (LHD)
D1		38 (*1)	D24		69 (RHD)			70 (RHD)
		40 (*2)	E9	A	49 (LHD)	J21	B	50 (LHD)
		42 (*3)			69 (RHD)			70 (RHD)
		44 (*4)	E10	B	49 (LHD)	N1		39 (*1)
		46 (*5)			69 (RHD)			41 (*2)
		58 (*10)	E11	C	49 (LHD)			43 (*3)
		60 (*11)			69 (RHD)			45 (*4)
		62 (*12)	E12	D	49 (LHD)			59 (*10)
		64 (*13)			69 (RHD)			61 (*11)
		66 (*14)	E13	E	49 (LHD)			63 (*12)
D3		38 (*1)			69 (RHD)			65 (*13)
		40 (*2)	J10	A	50 (LHD)			

: Relay Blocks

Code	See Page	Relay Blocks (Relay Block Location)
2	23	Engine Room R/B (Engine Compartment Left)

: Junction Block and Wire Harness Connector

Code	See Page	Junction Block and Wire Harness (Connector Location)
IG	27 (LHD)	Instrument Panel Wire and Driver Side J/B (Lower Finish Panel)
	29 (RHD)	
IK	27 (LHD)	
	29 (RHD)	

: Connector Joining Wire Harness and Wire Harness

Code	See Page	Joining Wire Harness and Wire Harness (Connector Location)
IC4	112 (RHD)	Instrument Panel Wire and Engine Room Main Wire (Left Kick Panel)
IL1	92 (LHD)	Engine Wire and Instrument Panel Wire (Right Side of the Blower Unit)
	116 (RHD)	Engine Wire and Instrument Panel Wire (Left Side of the Blower Unit)
IL2	92 (LHD)	Engine Wire and Instrument Panel Wire (Right Side of the Blower Unit)
	116 (RHD)	Engine Wire and Instrument Panel Wire (Left Side of the Blower Unit)
IL3	92 (LHD)	Engine Wire and Instrument Panel Wire (Right Side of the Blower Unit)
	116 (RHD)	Engine Wire and Instrument Panel Wire (Left Side of the Blower Unit)

* 1 : LHD 1GR–FE * 2 : LHD 3RZ–FE * 3 : LHD 1KD–FTV * 4 : LHD 1KZ–TE * 5 : LHD 5L–E * 6 : LHD 5–Door * 7 : LHD 3–Door
* 8 : LHD 8Way Power Seat * 9 : LHD Except 8Way Power Seat * 10 : RHD 1GR–FE * 11 : RHD 3RZ–FE * 12 : RHD 1KD–FTV
* 13 : RHD 1KZ–TE * 14 : RHD 5L–E * 15 : RHD 5–Door * 16 : RHD 3–Door * 17 : RHD 8Way Power Seat
* 18 : RHD Except 8Way Power Seat

▽ : **Ground Points**

Code	See Page	Ground Points Location
ED	80 (*2)	Ignition Coil Bracket
	104 (*11)	
EF	82 (*3)	Rear Part of Cylinder Block
	106 (*12)	
EH	84 (*4)	
	108 (*13)	
EI	86 (*5)	
	110 (*14)	
EV	78 (*1)	Rear Side of Left Bank Cylinder Block
	102 (*10)	

⬡ : **Splice Points**

Code	See Page	Wire Harness with Splice Points	Code	See Page	Wire Harness with Splice Points
E12	78 (*1)	Engine Wire	I7	114 (RHD)	Instrument Panel Wire
	102 (*10)		I8	90 (LHD)	Engine Wire
I7	90 (LHD)	Instrument Panel Wire		114 (RHD)	

* 1 : LHD 1GR-FE * 2 : LHD 3RZ-FE * 3 : LHD 1KD-FTV * 4 : LHD 1KZ-TE * 5 : LHD 5L-E * 6 : LHD 5-Door * 7 : LHD 3-Door
* 8 : LHD 8Way Power Seat * 9 : LHD Except 8Way Power Seat * 10 : RHD 1GR-FE * 11 : RHD 3RZ-FE * 12 : RHD 1KD-FTV
* 13 : RHD 1KZ-TE * 14 : RHD 5L-E * 15 : RHD 5-Door * 16 : RHD 3-Door * 17 : RHD 8Way Power Seat
* 18 : RHD Except 8Way Power Seat

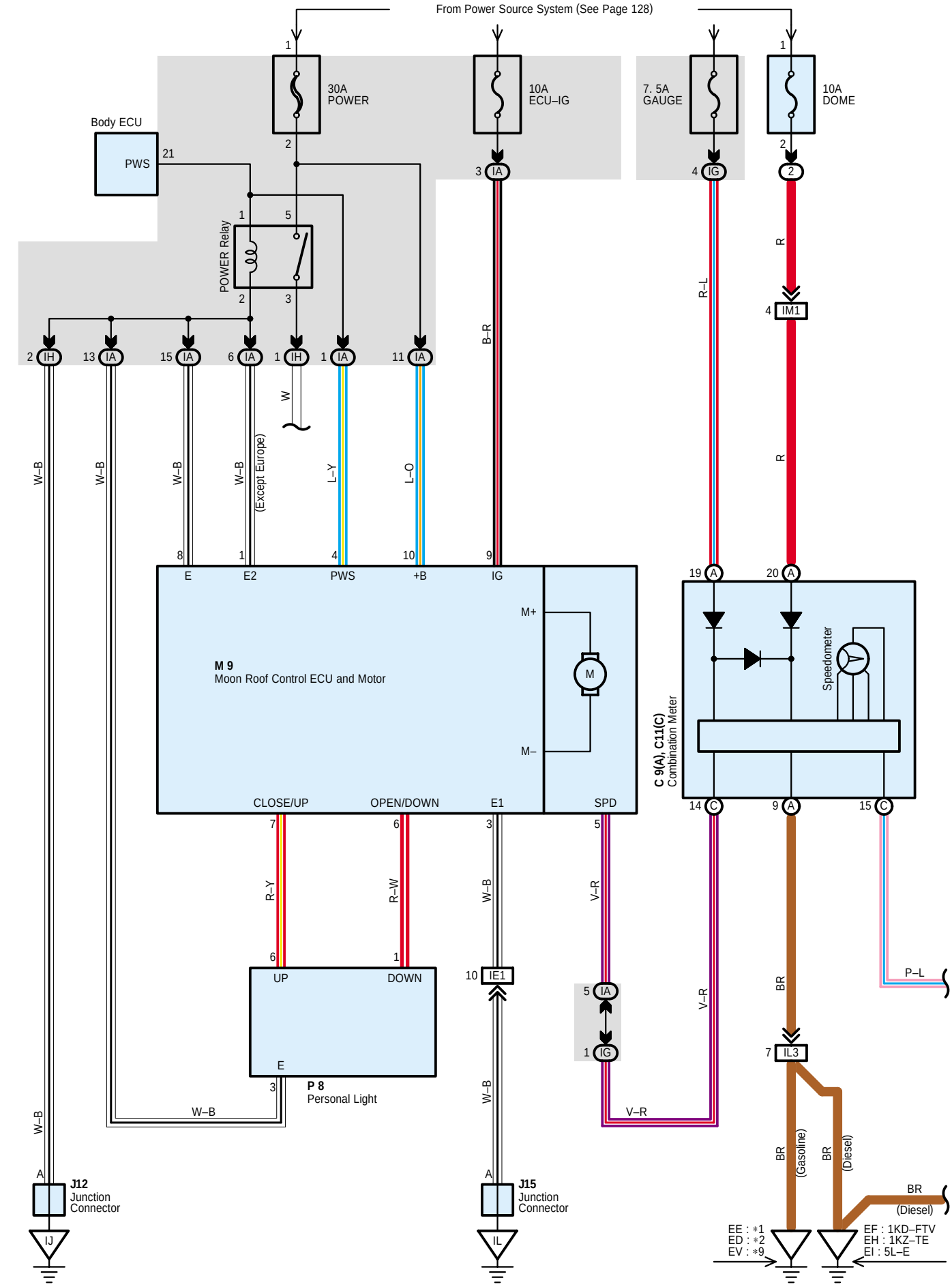
From Power Source System (See Page 128)
30A
POWER
10A
ECU–IG
7. 5A
GAUGE
10A
DOME
Body ECU
PWS
21
POWER Relay
M 9
Moon Roof Control ECU and Motor
M+
M–
M
E
E2
PWS
+B
IG
CLOSE/UP
OPEN/DOWN
E1
SPD
(Except Europe)
C 9(A), C11(C)
Combination Meter
Speedometer
UP
DOWN
P 8
Personal Light
J12
Junction
Connector
J15
Junction
Connector
IJ
IL
IM1
IL3
IE1
W–B
B–R
R–L
R
L–Y
L–O
W
R–Y
R–W
V–R
BR
P–L
(Gasoline)
(Diesel)
EE : *1
ED : *2
EV : *9
EF : 1KD–FTV
EH : 1KZ–TE
EI : 5L–E

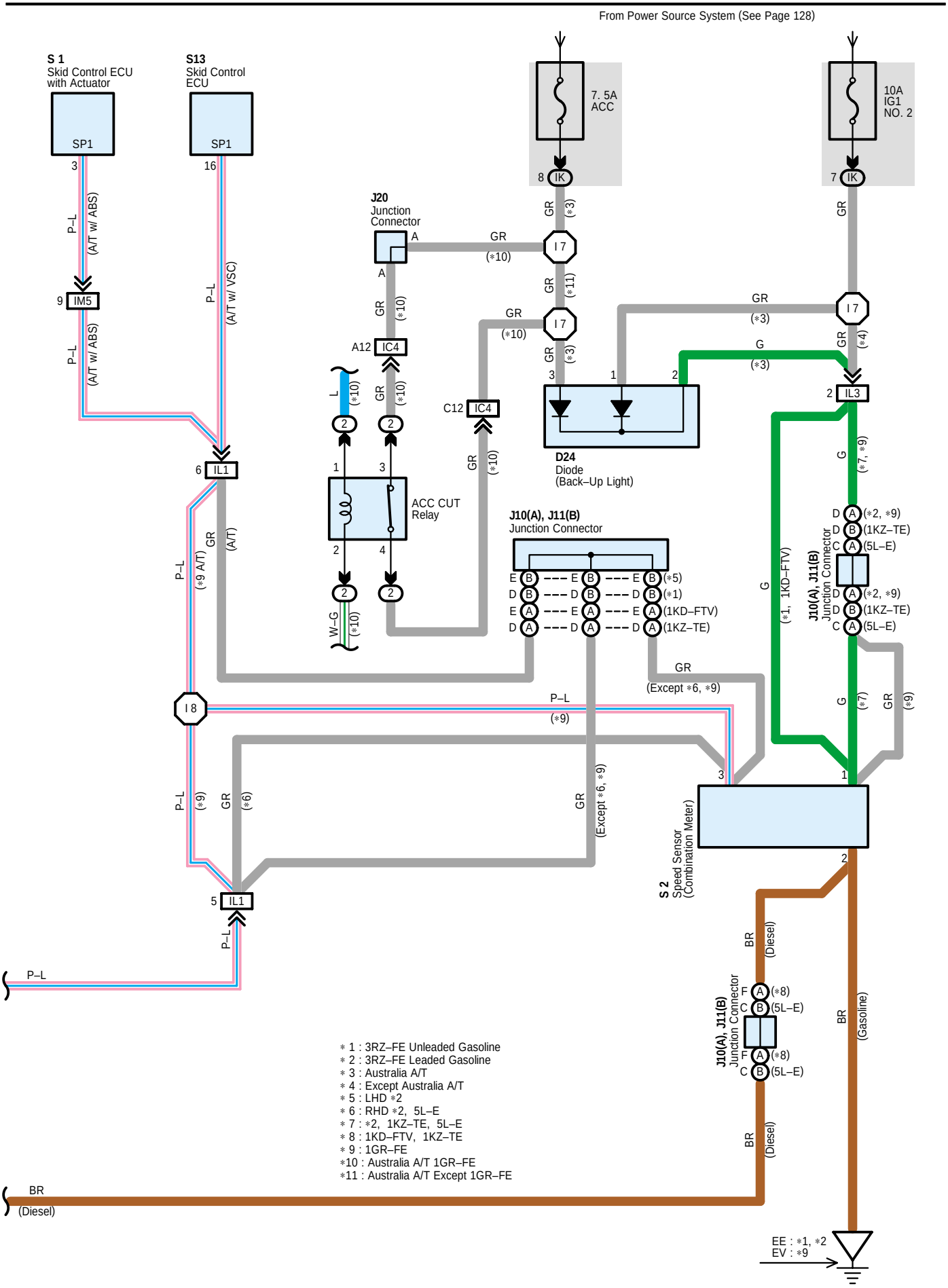
From Power Source System (See Page 128)
S 1
Skid Control ECU
with Actuator
S13
Skid Control
ECU
SP1
SP1
7. 5A
ACC
10A
IG1
NO. 2
IK
IK
J20
Junction
Connector
I 7
I 7
I 7
IM5
IC4
IC4
IL1
IL3
IL1
I 8
A12
C12
ACC CUT
Relay
D24
Diode
(Back–Up Light)
J10(A), J11(B)
Junction Connector
J10(A), J11(B)
Junction Connector
J10(A), J11(B)
Junction Connector
S 2
Speed Sensor
(Combination Meter)
(Except ∗6, ∗9)
(1KD–FTV)
(1KZ–TE)
(5L–E)
(∗1, 1KD–FTV)
(Diesel)
(Gasoline)
EE : ∗1, ∗2
EV : ∗9
∗ 1 : 3RZ–FE Unleaded Gasoline
∗ 2 : 3RZ–FE Leaded Gasoline
∗ 3 : Australia A/T
∗ 4 : Except Australia A/T
∗ 5 : LHD ∗2
∗ 6 : RHD ∗2, 5L–E
∗ 7 : ∗2, 1KZ–TE, 5L–E
∗ 8 : 1KD–FTV, 1KZ–TE
∗ 9 : 1GR–FE
∗10 : Australia A/T 1GR–FE
∗11 : Australia A/T Except 1GR–FE

System Outline

Current is always applied from the POWER fuse to TERMINAL 10 of the moon roof control ECU and motor. With the ignition SW turned on, the current flows to TERMINAL 9 of the moon roof control ECU and motor.

1. Moon Roof Open/Close Operation

For moon roof operation, there are moon roof control switches: ”Slide open/tilt down”; and ”Slide close/tilt up.” When a switch is pressed and held down for a certain period of time, one touch automatic operation takes place in accordance with the function of the switch.

2. Key-Off Operation

Roof remains operable - until about 45 seconds elapse after the ignition SW is turned from ON to OFF or until the driver’s seat door is opened and closed, whichever first occurs.
However, if an overload reverse operation was going on at that time, the key-off operation continues until it comes to an end.

3. Overload Reverse Operation

The moon roof control ECU detects jamming of the moon roof by foreign material, if occurred, from abnormal motor speed signal and reverses the moon roof operation.

4. Deflector Control Function

When the roof is slid fully open, the moon roof control ECU automatically adjusts the height of deflector in accordance with the vehicle cruising speed.

∗ When the battery terminal or fuse is disconnected, the roof position has to be reset to its initial position by the moon roof control SW in accordance with the following procedure:

(1) Reconnect the battery terminal or fuse.

(2) Turn ON the ignition switch.

(3) Operate the moon roof control SW to open the roof halfway or more.

(4) Then operate the moon roof control SW to fully close the roof.
Do not release the switch for at least one second after the roof is fully closed.

Service Hints

M9 Moon Roof Control ECU and Motor

9-Ground : Approx. 12 volts with the ignition SW at ON position
10-Ground : Always approx. 12 volts
1, 8, 3-Ground : Always continuity

○ **: Parts Location**

Code		See Page	Code	See Page	Code	See Page
C9	A	49 (LHD)	M9	53 (*6)	S1	63 (*12)
		69 (RHD)		55 (*7)		65 (*13)
C11	C	49 (LHD)		73 (*15)	S2	39 (*1)
		69 (RHD)		75 (*16)		41 (*2)
D24		69 (RHD)	P8	53 (*6)		43 (*3)
J10	A	50 (LHD)		55 (*7)		45 (*4)
		70 (RHD)		73 (*15)		47 (*5)
J11	B	50 (LHD)		75 (*16)		59 (*10)
		70 (RHD)	S1	39 (*1)		61 (*11)
J12		50 (LHD)		41 (*2)		63 (*12)
		70 (RHD)		43 (*3)		65 (*13)
J15		50 (LHD)		45 (*4)		67 (*14)
		70 (RHD)		59 (*10)	S13	51 (LHD)
J20		70 (RHD)		61 (*11)		71 (RHD)

* 1 : LHD 1GR-FE * 2 : LHD 3RZ-FE * 3 : LHD 1KD-FTV * 4 : LHD 1KZ-TE * 5 : LHD 5L-E * 6 : LHD 5-Door * 7 : LHD 3-Door
* 8 : LHD 8Way Power Seat * 9 : LHD Except 8Way Power Seat * 10 : RHD 1GR-FE * 11 : RHD 3RZ-FE * 12 : RHD 1KD-FTV
* 13 : RHD 1KZ-TE * 14 : RHD 5L-E * 15 : RHD 5-Door * 16 : RHD 3-Door * 17 : RHD 8Way Power Seat
* 18 : RHD Except 8Way Power Seat

: **Relay Blocks**

Code	See Page	Relay Blocks (Relay Block Location)
2	23	Engine Room R/B (Engine Compartment Left)

: **Junction Block and Wire Harness Connector**

Code	See Page	Junction Block and Wire Harness (Connector Location)
IA	26 (LHD)	Roof Wire and Driver Side J/B (Lower Finish Panel)
	28 (RHD)	
IG	27 (LHD)	Instrument Panel Wire and Driver Side J/B (Lower Finish Panel)
	29 (RHD)	
IH	27 (LHD)	
	29 (RHD)	
IK	27 (LHD)	
	29 (RHD)	

: **Connector Joining Wire Harness and Wire Harness**

Code	See Page	Joining Wire Harness and Wire Harness (Connector Location)
IC4	112 (RHD)	Instrument Panel Wire and Engine Room Main Wire (Left Kick Panel)
IE1	90 (LHD)	Roof Wire and Instrument Panel Wire (Upper the Driver Side J/B)
	114 (RHD)	Roof Wire and Instrument Panel Wire (Left Side of the Driver Side J/B)
IL1	92 (LHD)	Engine Wire and Instrument Panel Wire (Right Side of the Blower Unit)
	116 (RHD)	Engine Wire and Instrument Panel Wire (Left Side of the Blower Unit)
IL3	92 (LHD)	Engine Wire and Instrument Panel Wire (Right Side of the Blower Unit)
	116 (RHD)	Engine Wire and Instrument Panel Wire (Left Side of the Blower Unit)
IM1	92 (LHD)	Instrument Panel Wire and Engine Room Main Wire (Right Kick Panel)
	116 (RHD)	
IM5	92 (LHD)	
	116 (RHD)	

: **Ground Points**

Code	See Page	Ground Points Location
EE	80 (*2)	Intake Manifold
	104 (*11)	
ED	80 (*2)	Ignition Coil Bracket
	104 (*11)	
EE	80 (*2)	Intake Manifold
	104 (*11)	
EF	82 (*3)	Rear Part of Cylinder Block
	106 (*12)	
EH	84 (*4)	
	108 (*13)	
EI	86 (*5)	
	110 (*14)	
EV	78 (*1)	Rear Side of Left Bank Cylinder Block
	102 (*10)	
IJ	88 (LHD)	Left Kick Panel
	112 (RHD)	Right Kick Panel
IL	88 (LHD)	Near the Right Side of Steering Column
	112 (RHD)	Instrument Panel Brace RH

* 1 : LHD 1GR-FE * 2 : LHD 3RZ-FE * 3 : LHD 1KD-FTV * 4 : LHD 1KZ-TE * 5 : LHD 5L-E * 6 : LHD 5-Door * 7 : LHD 3-Door
* 8 : LHD 8Way Power Seat * 9 : LHD Except 8Way Power Seat * 10 : RHD 1GR-FE * 11 : RHD 3RZ-FE * 12 : RHD 1KD-FTV
* 13 : RHD 1KZ-TE * 14 : RHD 5L-E * 15 : RHD 5-Door * 16 : RHD 3-Door * 17 : RHD 8Way Power Seat
* 18 : RHD Except 8Way Power Seat

: **Splice Points**

Code	See Page	Wire Harness with Splice Points	Code	See Page	Wire Harness with Splice Points
I7	90 (LHD) 114 (RHD)	Instrument Panel Wire	I8	90 (LHD) 114 (RHD)	Engine Wire

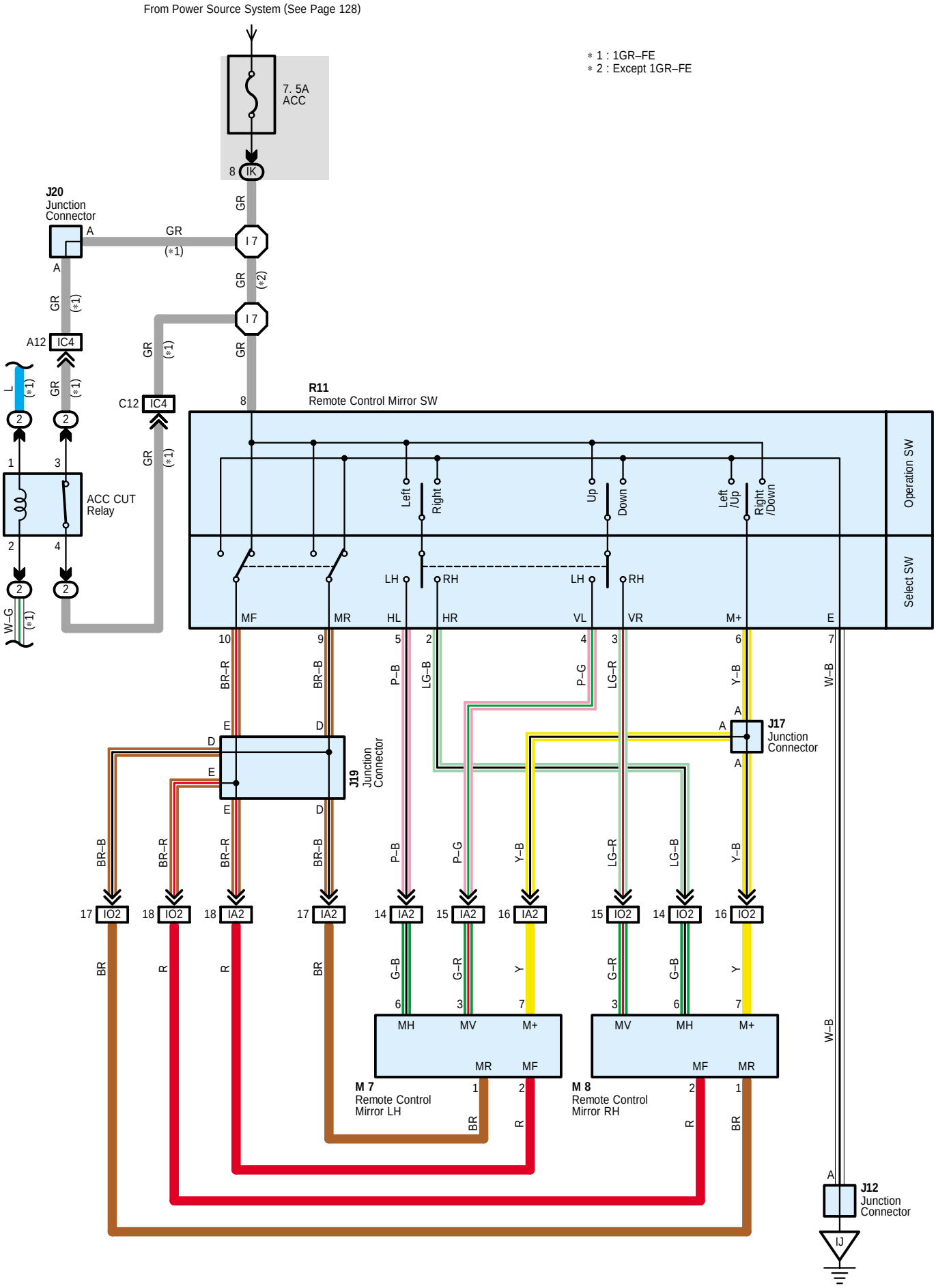
From Power Source System (See Page 128)
* 1 : 1GR–FE
* 2 : Except 1GR–FE
7. 5A
ACC
8 IK
J20
Junction
Connector
A
GR
(*1)
I 7
GR
(*2)
A12 IC4
C12 IC4
L
W–G
ACC CUT
Relay
R11
Remote Control Mirror SW
Operation SW
Select SW
Left
Right
Up
Down
Left
/Up
Right
/Down
LH
RH
MF
MR
HL
HR
VL
VR
M+
E
BR–R
BR–B
P–B
LG–B
P–G
LG–R
Y–B
W–B
J19
Junction
Connector
J17
Junction
Connector
IO2
IA2
BR
R
G–B
G–R
Y
MH
MV
M 7
Remote Control
Mirror LH
M 8
Remote Control
Mirror RH
J12
Junction
Connector
IJ

Service Hints

R11 Remote Control Mirror SW

8–6 : Continuity with the operation SW at DOWN or RIGHT position
6–7 : Continuity with the operation SW at UP or LEFT position
8–Ground : Approx. 12 volts with the the ignition SW at ACC or ON position
7–Ground : Always continuity

: Parts Location

Code	See Page	Code	See Page	Code	See Page
J12	50 (LHD)	J20	50 (LHD)	M8	53 (*6)
	70 (RHD)		70 (RHD)		55 (*7)
J17	50 (LHD)	M7	53 (*6)		73 (*15)
	70 (RHD)		55 (*7)		75 (*16)
J19	50 (LHD)		73 (*15)	R11	51 (LHD)
	70 (RHD)		75 (*16)		71 (RHD)

: Relay Blocks

Code	See Page	Relay Blocks (Relay Block Location)
2	23	Engine Room R/B (Engine Compartment Left)

: Junction Block and Wire Harness Connector

Code	See Page	Junction Block and Wire Harness (Connector Location)
IK	27 (LHD)	Instrument Panel Wire and Driver Side J/B (Lower Finish Panel)
	29 (RHD)	

: Connector Joining Wire Harness and Wire Harness

Code	See Page	Joining Wire Harness and Wire Harness (Connector Location)
IA2	88 (LHD)	Front Door LH Wire and Instrument Panel Wire (Left Kick Panel)
	112 (RHD)	
IC4	88 (LHD)	Instrument Panel Wire and Engine Room Main Wire (Left Kick Panel)
	112 (RHD)	
IO2	94 (LHD)	Front Door RH Wire and Instrument Panel Wire (Right Kick Panel)
	118 (RHD)	

: Ground Points

Code	See Page	Ground Points Location
IJ	88 (LHD)	Left Kick Panel
	112 (RHD)	Right Kick Panel

: Splice Points

Code	See Page	Wire Harness with Splice Points	Code	See Page	Wire Harness with Splice Points
I7	90 (LHD)	Instrument Panel Wire	I7	114 (RHD)	Instrument Panel Wire

* 1 : LHD 1GR–FE * 2 : LHD 3RZ–FE * 3 : LHD 1KD–FTV * 4 : LHD 1KZ–TE * 5 : LHD 5L–E * 6 : LHD 5–Door * 7 : LHD 3–Door
* 8 : LHD 8Way Power Seat * 9 : LHD Except 8Way Power Seat * 10 : RHD 1GR–FE * 11 : RHD 3RZ–FE * 12 : RHD 1KD–FTV
* 13 : RHD 1KZ–TE * 14 : RHD 5L–E * 15 : RHD 5–Door * 16 : RHD 3–Door * 17 : RHD 8Way Power Seat
* 18 : RHD Except 8Way Power Seat

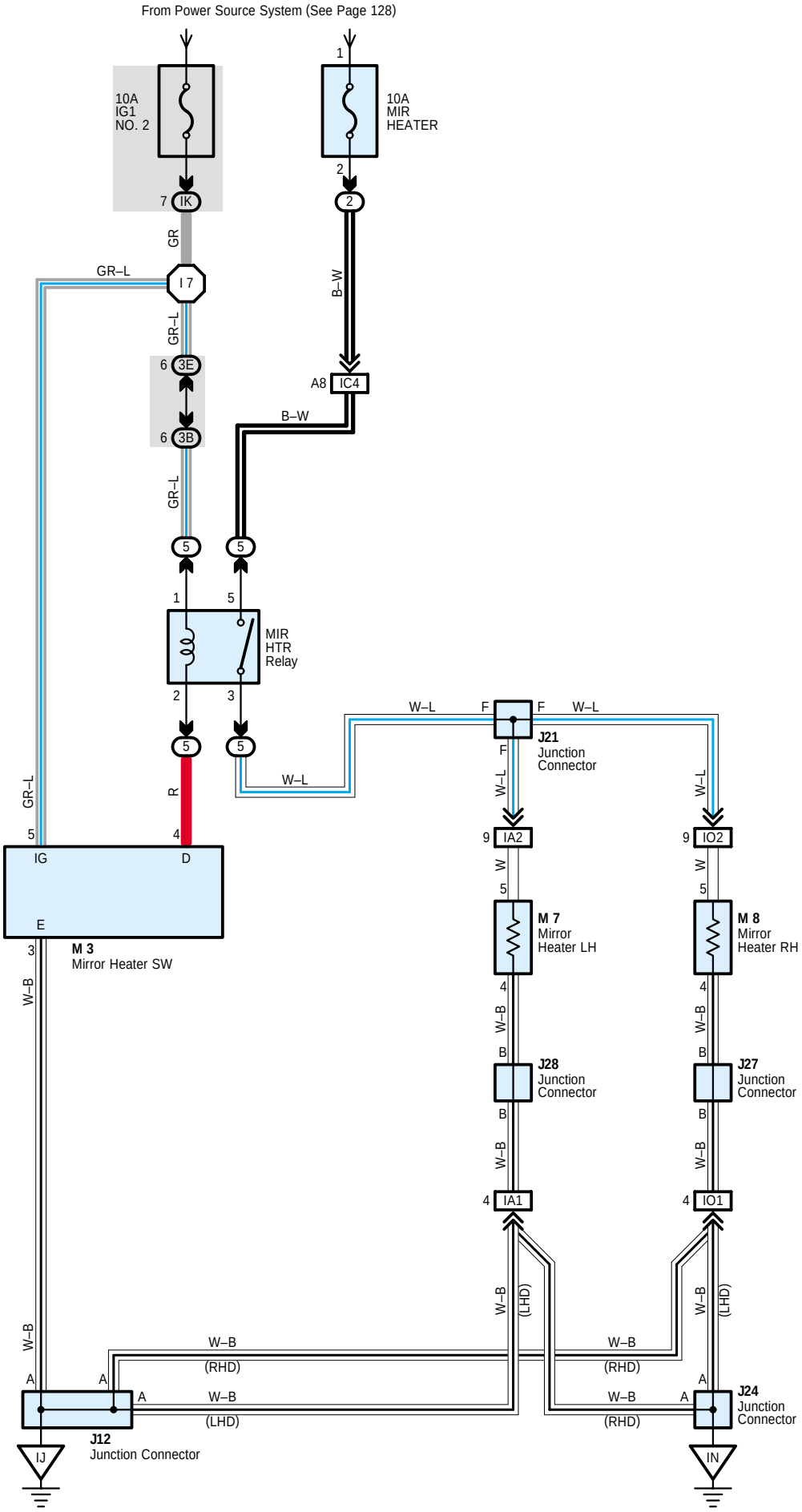
From Power Source System (See Page 128)
10A
IG1
NO. 2
10A
MIR
HEATER
7 IK
GR
GR–L
I 7
GR–L
6 3E
6 3B
GR–L
B–W
A8 IC4
B–W
MIR
HTR
Relay
R
GR–L
IG
D
E
M 3
Mirror Heater SW
W–B
W–L
J21
Junction
Connector
9 IA2
9 IO2
W
M 7
Mirror
Heater LH
M 8
Mirror
Heater RH
J28
Junction
Connector
J27
Junction
Connector
4 IA1
4 IO1
(LHD)
(RHD)
J12
Junction Connector
J24
Junction
Connector
IJ
IN

Service Hints

M3 Mirror Heater SW

5–Ground : Approx. 12 volts with the ignition SW at ON position
3–Ground : Always continuity

: Parts Location

Code	See Page	Code	See Page	Code	See Page
J12	50 (LHD)	J27	72 (*15)	M7	53 (*6)
	70 (RHD)		74 (*16)		55 (*7)
J21	50 (LHD)	J28	52 (*6)		73 (*15)
	70 (RHD)		54 (*7)		75 (*16)
J24	50 (LHD)		72 (*15)	M8	53 (*6)
	70 (RHD)		74 (*16)		55 (*7)
J27	52 (*6)	M3	50 (LHD)		73 (*15)
	54 (*7)		70 (RHD)		75 (*16)

: Relay Blocks

Code	See Page	Relay Blocks (Relay Block Location)
2	23	Engine Room R/B (Engine Compartment Left)
5	25 (LHD)	Passenger Side R/B (Right Kick Panel)
	25 (RHD)	Passenger Side R/B (Left Kick Panel)

: Junction Block and Wire Harness Connector

Code	See Page	Junction Block and Wire Harness (Connector Location)
IK	27 (LHD)	Instrument Panel Wire and Driver Side J/B (Lower Finish Panel)
	29 (RHD)	
3B	36 (LHD)	Instrument Panel Wire and J/B No.3 (Instrument Panel Reinforcement Right)
	36 (RHD)	Instrument Panel Wire and J/B No.3 (Instrument Panel Reinforcement Left)
3E	36 (LHD)	Instrument Panel Wire and J/B No.3 (Instrument Panel Reinforcement Right)
	36 (RHD)	Instrument Panel Wire and J/B No.3 (Instrument Panel Reinforcement Left)

: Connector Joining Wire Harness and Wire Harness

Code	See Page	Joining Wire Harness and Wire Harness (Connector Location)
IA1	88 (LHD)	Front Door LH Wire and Instrument Panel Wire (Left Kick Panel)
	112 (RHD)	
IA2	88 (LHD)	
	112 (RHD)	
IC4	88 (LHD)	Instrument Panel Wire and Engine Room Main Wire (Left Kick Panel)
	112 (RHD)	
IO1	94 (LHD)	Front Door RH Wire and Instrument Panel Wire (Right Kick Panel)
	118 (RHD)	
IO2	94 (LHD)	
	118 (RHD)	

: Ground Points

Code	See Page	Ground Points Location
IJ	88 (LHD)	Left Kick Panel
	112 (RHD)	Right Kick Panel
IN	88 (LHD)	
	112 (RHD)	Left Kick Panel

* 1 : LHD 1GR–FE * 2 : LHD 3RZ–FE * 3 : LHD 1KD–FTV * 4 : LHD 1KZ–TE * 5 : LHD 5L–E * 6 : LHD 5–Door * 7 : LHD 3–Door
* 8 : LHD 8Way Power Seat * 9 : LHD Except 8Way Power Seat * 10 : RHD 1GR–FE * 11 : RHD 3RZ–FE * 12 : RHD 1KD–FTV
* 13 : RHD 1KZ–TE * 14 : RHD 5L–E * 15 : RHD 5–Door * 16 : RHD 3–Door * 17 : RHD 8Way Power Seat
* 18 : RHD Except 8Way Power Seat

: **Splice Points**

Code	See Page	Wire Harness with Splice Points	Code	See Page	Wire Harness with Splice Points
I7	90 (LHD)	Instrument Panel Wire	I7	114 (RHD)	Instrument Panel Wire

Rear Window Defogger

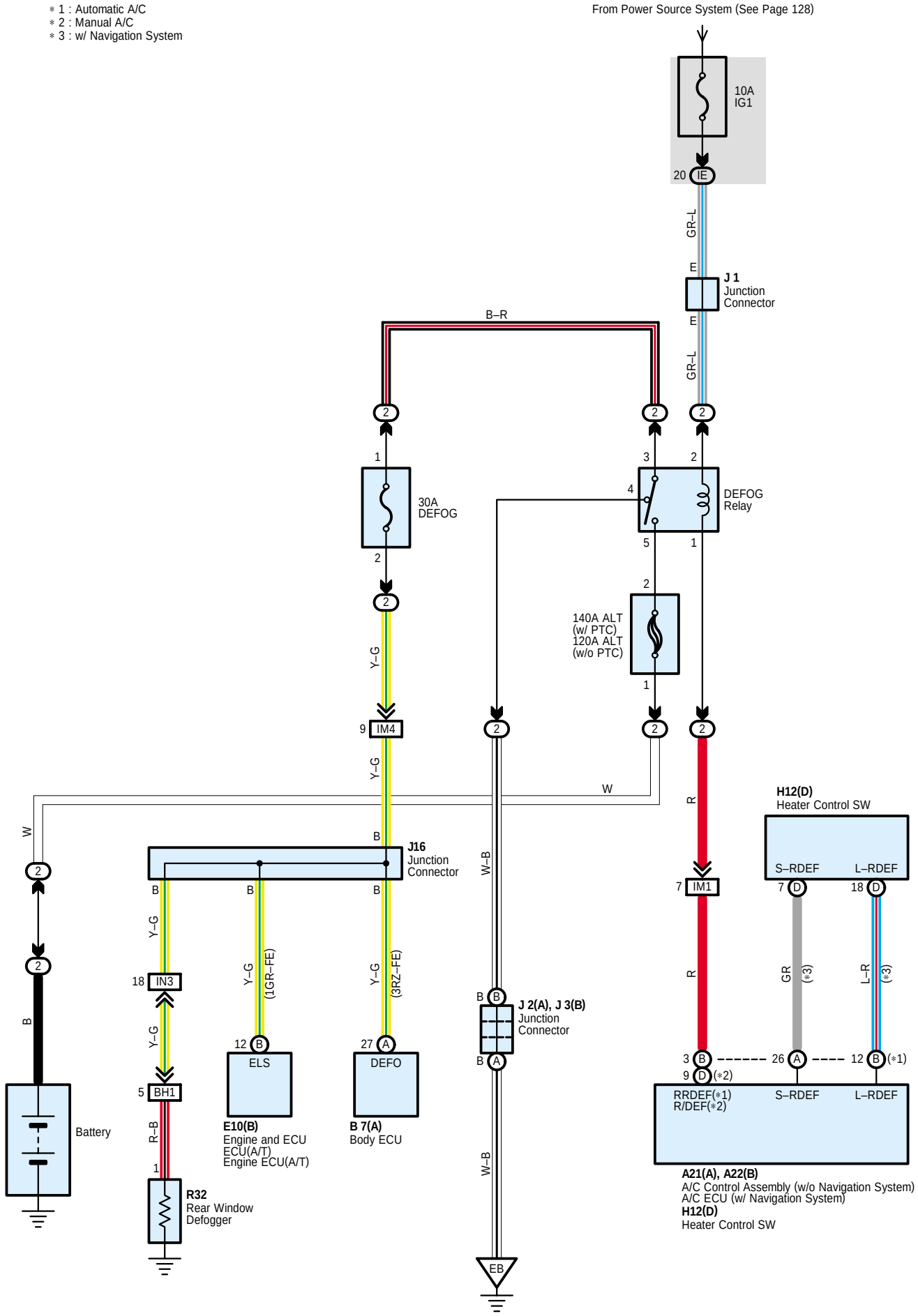

Service Hints

DEFOG Relay

5–3 : Closed with the ignition SW at ON position and rear window defogger SW on

: Parts Location

Code		See Page	Code		See Page	Code		See Page
A21	A	48 (LHD)	J1		61 (*11)	J3	B	43 (*3)
		68 (RHD)			63 (*12)			45 (*4)
A22	B	48 (LHD)			65 (*13)			47 (*5)
		68 (RHD)			67 (*14)			59 (*10)
B7	A	48 (LHD)	J2	A	39 (*1)			61 (*11)
		68 (RHD)			41 (*2)			63 (*12)
E10	B	49 (LHD)			43 (*3)			65 (*13)
		69 (RHD)			45 (*4)			67 (*14)
H12	D	50 (LHD)			47 (*5)	J16		50 (LHD)
		70 (RHD)			59 (*10)			70 (RHD)
J1		39 (*1)			61 (*11)	R32		53 (*6)
		41 (*2)			63 (*12)			55 (*7)
		43 (*3)			65 (*13)			73 (*15)
		45 (*4)			67 (*14)			75 (*16)
		47 (*5)	J3	B	39 (*1)			
		59 (*10)			41 (*2)			

: Relay Blocks

Code	See Page	Relay Blocks (Relay Block Location)
2	23	Engine Room R/B (Engine Compartment Left)

: Junction Block and Wire Harness Connector

Code	See Page	Junction Block and Wire Harness (Connector Location)
IE	26 (LHD)	Engine Room Main Wire and Driver Side J/B (Lower Finish Panel)
	28 (RHD)	

: Connector Joining Wire Harness and Wire Harness

Code	See Page	Joining Wire Harness and Wire Harness (Connector Location)
IM1	92 (LHD)	Instrument Panel Wire and Engine Room Main Wire (Right Kick Panel)
	116 (RHD)	
IM4	92 (LHD)	
	116 (RHD)	
IN3	94 (LHD)	Instrument Panel Wire and Floor Wire (Right Kick Panel)
	118 (RHD)	
BH1	98 (*6)	Back Door No.1 Wire and Floor Wire (Right Quarter Panel Inner)
	100 (*7)	
	122 (*15)	
	124 (*16)	

* 1 : LHD 1GR–FE * 2 : LHD 3RZ–FE * 3 : LHD 1KD–FTV * 4 : LHD 1KZ–TE * 5 : LHD 5L–E * 6 : LHD 5–Door * 7 : LHD 3–Door
* 8 : LHD 8Way Power Seat * 9 : LHD Except 8Way Power Seat * 10 : RHD 1GR–FE * 11 : RHD 3RZ–FE * 12 : RHD 1KD–FTV
* 13 : RHD 1KZ–TE * 14 : RHD 5L–E * 15 : RHD 5–Door * 16 : RHD 3–Door * 17 : RHD 8Way Power Seat
* 18 : RHD Except 8Way Power Seat

▽ : **Ground Points**

Code	See Page	Ground Points Location
EB	78 (*1)	Front Left Fender
	80 (*2)	
	82 (*3)	
	84 (*4)	
	86 (*5)	
	102 (*10)	
	104 (*11)	
	106 (*12)	
	108 (*13)	
	110 (*14)	

* 1 : LHD 1GR-FE * 2 : LHD 3RZ-FE * 3 : LHD 1KD-FTV * 4 : LHD 1KZ-TE * 5 : LHD 5L-E * 6 : LHD 5-Door * 7 : LHD 3-Door
* 8 : LHD 8Way Power Seat * 9 : LHD Except 8Way Power Seat * 10 : RHD 1GR-FE * 11 : RHD 3RZ-FE * 12 : RHD 1KD-FTV
* 13 : RHD 1KZ-TE * 14 : RHD 5L-E * 15 : RHD 5-Door * 16 : RHD 3-Door * 17 : RHD 8Way Power Seat
* 18 : RHD Except 8Way Power Seat

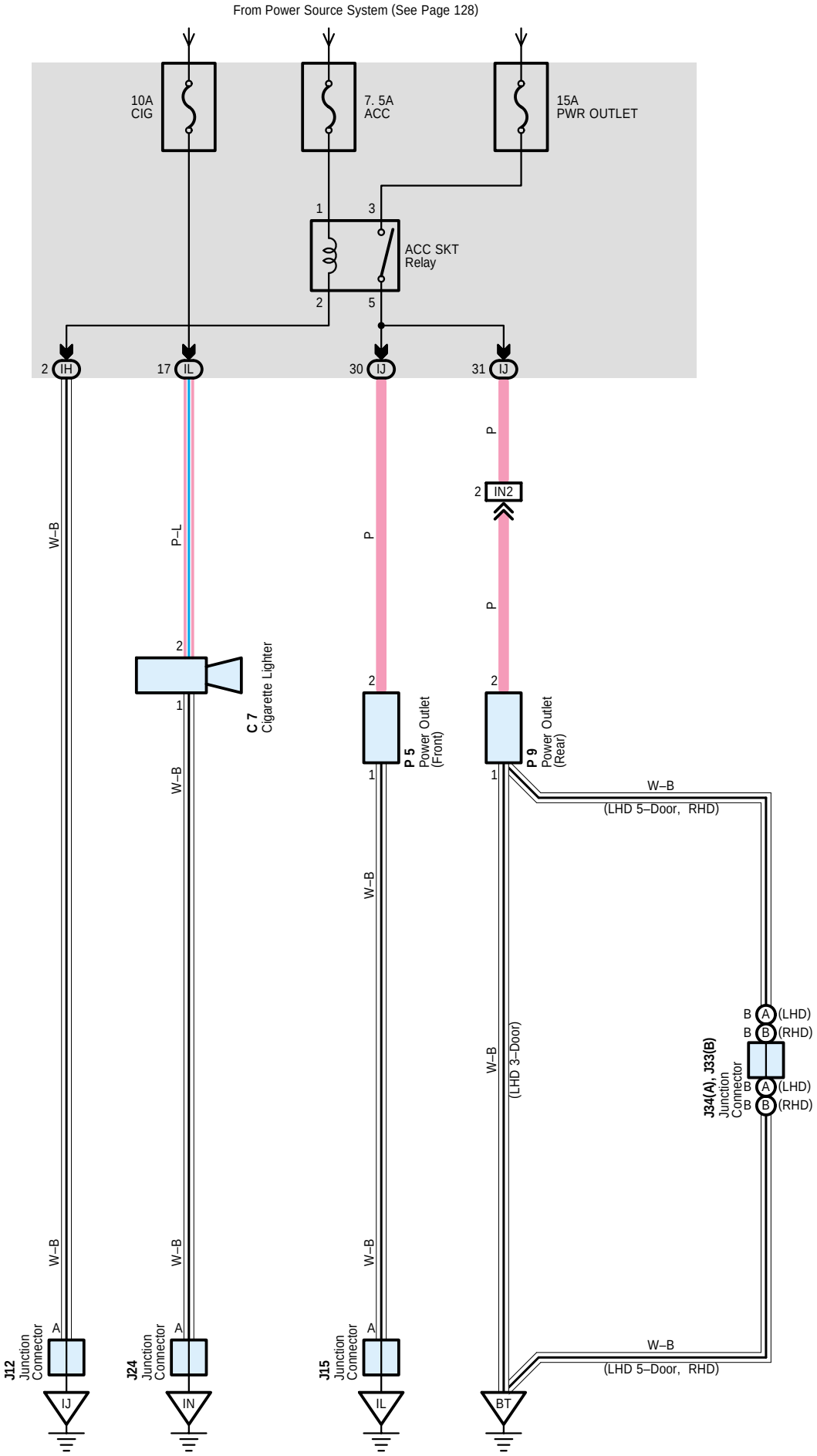
From Power Source System (See Page 128)
10A
CIG
7. 5A
ACC
15A
PWR OUTLET
1
3
ACC SKT
Relay
2
5
2 IH
17 IL
30 IJ
31 IJ
W–B
P–L
P
P
2 IN2
P
2
C 7
Cigarette Lighter
1
W–B
2
P 5
Power Outlet
(Front)
1
W–B
2
P 9
Power Outlet
(Rear)
1
W–B
(LHD 5–Door, RHD)
W–B
(LHD 3–Door)
B A (LHD)
B B (RHD)
J34(A), J33(B)
Junction
Connector
B A (LHD)
B B (RHD)
W–B
W–B
W–B
W–B
(LHD 5–Door, RHD)
J12
Junction
Connector
A
IJ
J24
Junction
Connector
A
IN
J15
Junction
Connector
A
IL
BT

Service Hints

C7 Cigarette Lighter

2–Ground : Approx. 12 volts with the ignition SW at ACC or ON position
1–Ground : Always continuity

P5 Power Outlet (Front)

2–Ground : Approx. 12 volts with the ignition SW at ACC or ON position
1–Ground : Always continuity

P9 Power Outlet (Rear)

2–Ground : Approx. 12 volts with the ignition SW at ACC or ON position
1–Ground : Always continuity

: Parts Location

Code	See Page	Code	See Page	Code	See Page
C7	49 (LHD)	J24	50 (LHD)	P5	71 (RHD)
	69 (RHD)		70 (RHD)	P9	53 (*6)
J12	50 (LHD)	J33 B	72 (*15)		55 (*7)
	70 (RHD)		74 (*16)		73 (*15)
J15	50 (LHD)	J34 A	52 (*6)		75 (*16)
	70 (RHD)	P5	51 (LHD)		

: Junction Block and Wire Harness Connector

Code	See Page	Junction Block and Wire Harness (Connector Location)
IH	27 (LHD)	Instrument Panel Wire and Driver Side J/B (Lower Finish Panel)
	29 (RHD)	
IJ	27 (LHD)	
	29 (RHD)	
IL	27 (LHD)	
	29 (RHD)	

: Connector Joining Wire Harness and Wire Harness

Code	See Page	Joining Wire Harness and Wire Harness (Connector Location)
IN2	94 (LHD)	Instrument Panel Wire and Floor Wire (Right Kick Panel)
	118 (RHD)	

: Ground Points

Code	See Page	Ground Points Location
IJ	88 (LHD)	Left Kick Panel
	112 (RHD)	Right Kick Panel
IL	88 (LHD)	Near the Right Side of Steering Column
	112 (RHD)	Instrument Panel Brace RH
IN	88 (LHD)	Right Kick Panel
	112 (RHD)	Left Kick Panel
BT	96 (*6)	Right Quarter Panel Inner
	100 (*7)	
	120 (*15)	
	124 (*16)	

* 1 : LHD 1GR–FE * 2 : LHD 3RZ–FE * 3 : LHD 1KD–FTV * 4 : LHD 1KZ–TE * 5 : LHD 5L–E * 6 : LHD 5–Door * 7 : LHD 3–Door
* 8 : LHD 8Way Power Seat * 9 : LHD Except 8Way Power Seat * 10 : RHD 1GR–FE * 11 : RHD 3RZ–FE * 12 : RHD 1KD–FTV
* 13 : RHD 1KZ–TE * 14 : RHD 5L–E * 15 : RHD 5–Door * 16 : RHD 3–Door * 17 : RHD 8Way Power Seat
* 18 : RHD Except 8Way Power Seat

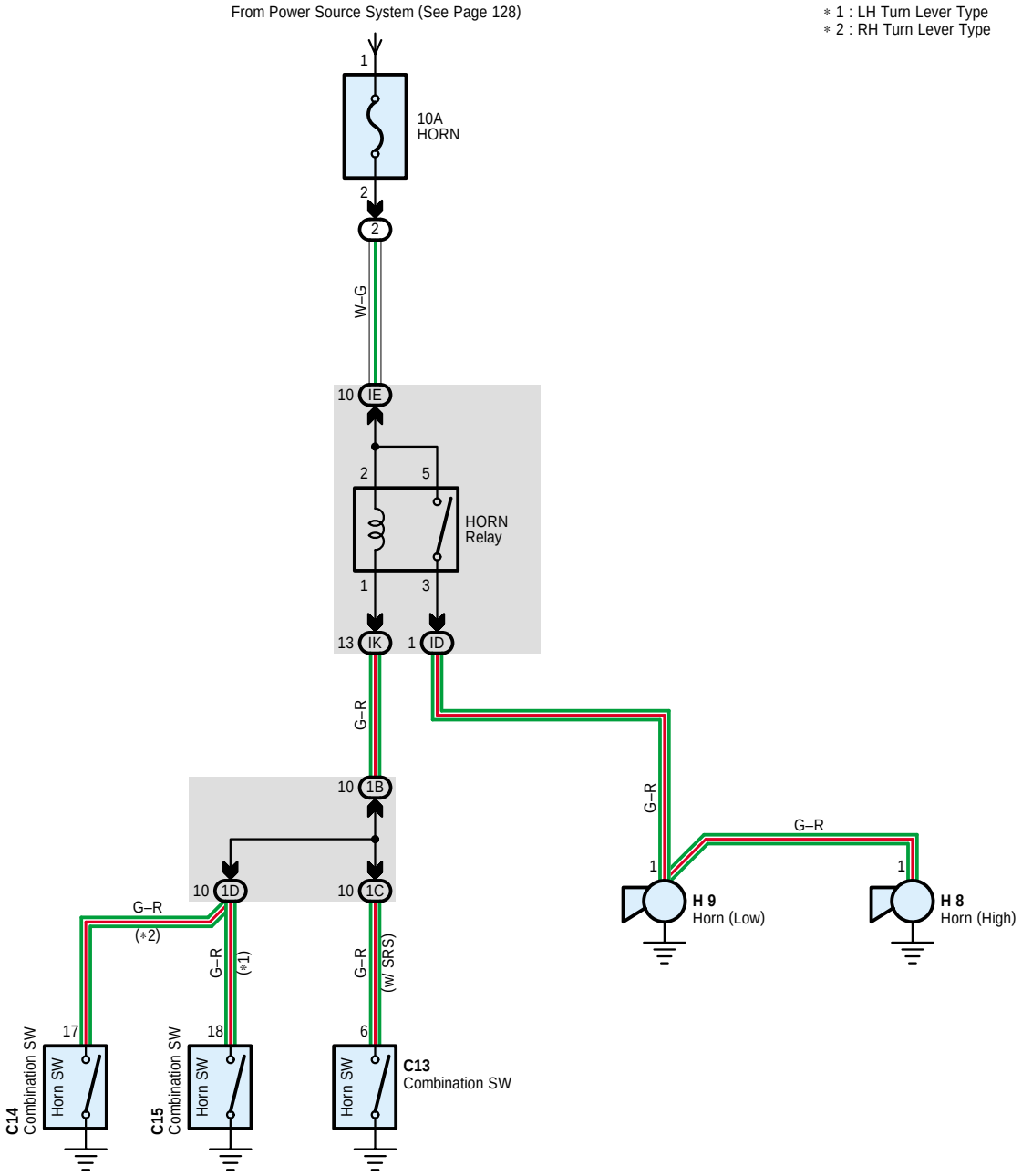
From Power Source System (See Page 128)
* 1 : LH Turn Lever Type
* 2 : RH Turn Lever Type
1
10A
HORN
2
2
W–G
10 IE
2
5
HORN
Relay
1
3
13 IK
1 ID
G–R
10 1B
G–R
G–R
10 1D
10 1C
G–R
(*2)
G–R
(*1)
G–R
(w/ SRS)
1
1
H 9
Horn (Low)
H 8
Horn (High)
17
18
6
C14
Combination SW
Horn SW
C15
Combination SW
Horn SW
Horn SW
C13
Combination SW

Service Hints

HORN Relay

5–3 : Closed with the horn SW on

: Parts Location

Code	See Page	Code	See Page	Code	See Page
C13	49 (LHD)	H8	45 (*4)	H9	43 (*3)
	69 (RHD)		47 (*5)		45 (*4)
C14	49 (LHD)		59 (*10)		47 (*5)
	69 (RHD)		61 (*11)		59 (*10)
C15	49 (LHD)		63 (*12)		61 (*11)
	69 (RHD)		65 (*13)		63 (*12)
H8	39 (*1)		67 (*14)		65 (*13)
	41 (*2)	H9	39 (*1)		67 (*14)
	43 (*3)		41 (*2)		

: Relay Blocks

Code	See Page	Relay Blocks (Relay Block Location)
2	23	Engine Room R/B (Engine Compartment Left)

: Junction Block and Wire Harness Connector

Code	See Page	Junction Block and Wire Harness (Connector Location)
ID	26 (LHD)	Engine Room Main Wire and Driver Side J/B (Lower Finish Panel)
	28 (RHD)	
IE	26 (LHD)	
	28 (RHD)	
IK	27 (LHD)	Instrument Panel Wire and Driver Side J/B (Lower Finish Panel)
	29 (RHD)	
1B	32 (LHD)	Instrument Panel Wire and J/B No.1 (Instrument Panel Reinforcement Left)
	32 (RHD)	Instrument Panel Wire and J/B No.1 (Instrument Panel Reinforcement Right)
1C	32 (LHD)	Instrument Panel Wire and J/B No.1 (Instrument Panel Reinforcement Left)
	32 (RHD)	Instrument Panel Wire and J/B No.1 (Instrument Panel Reinforcement Right)
1D	32 (LHD)	Instrument Panel Wire and J/B No.1 (Instrument Panel Reinforcement Left)
	32 (RHD)	Instrument Panel Wire and J/B No.1 (Instrument Panel Reinforcement Right)

* 1 : LHD 1GR–FE * 2 : LHD 3RZ–FE * 3 : LHD 1KD–FTV * 4 : LHD 1KZ–TE * 5 : LHD 5L–E * 6 : LHD 5–Door * 7 : LHD 3–Door
* 8 : LHD 8Way Power Seat * 9 : LHD Except 8Way Power Seat * 10 : RHD 1GR–FE * 11 : RHD 3RZ–FE * 12 : RHD 1KD–FTV
* 13 : RHD 1KZ–TE * 14 : RHD 5L–E * 15 : RHD 5–Door * 16 : RHD 3–Door * 17 : RHD 8Way Power Seat
* 18 : RHD Except 8Way Power Seat

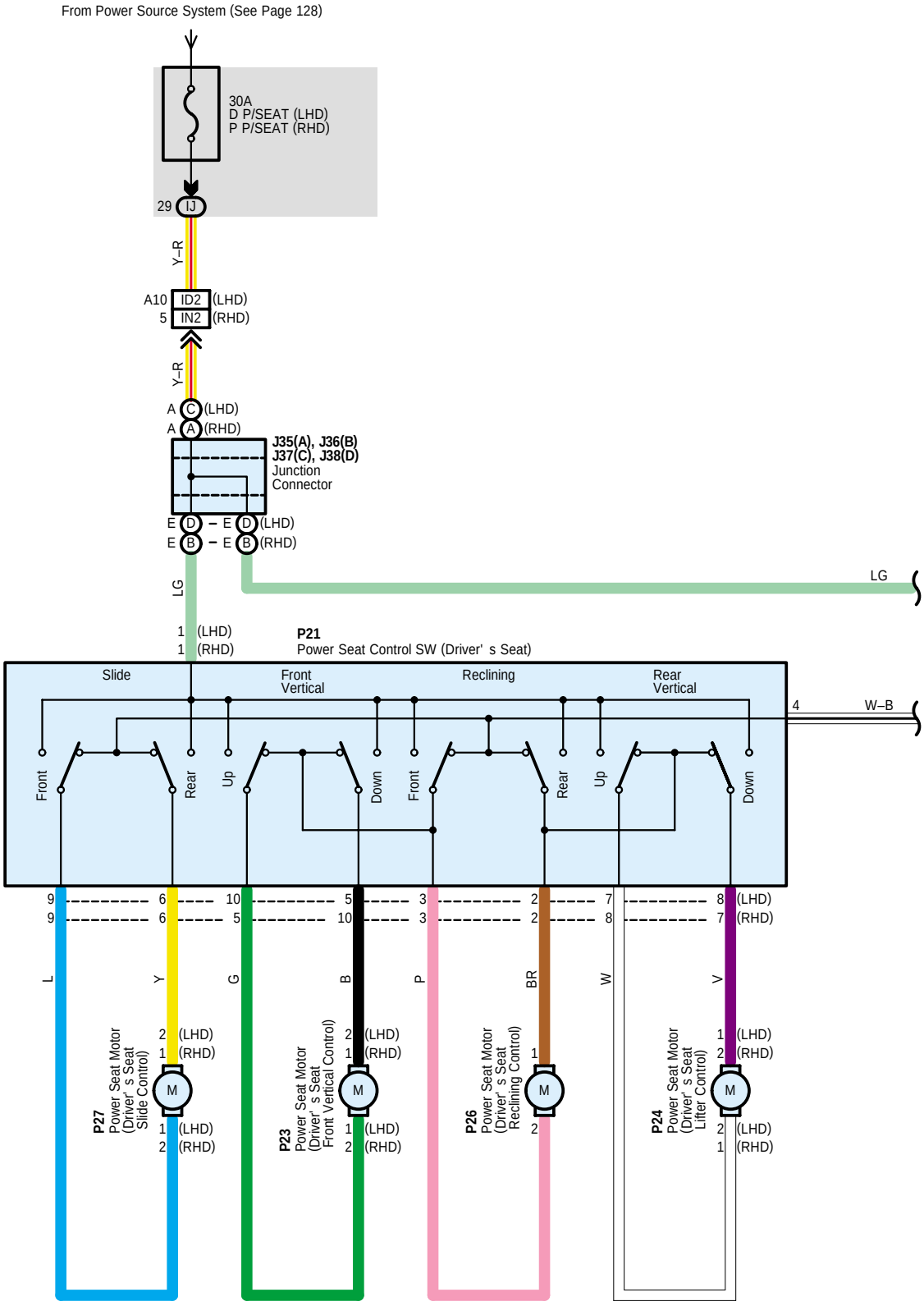
From Power Source System (See Page 128)
30A
D P/SEAT (LHD)
P P/SEAT (RHD)
29 IJ
Y–R
A10 ID2 (LHD)
5 IN2 (RHD)
Y–R
A C (LHD)
A A (RHD)
J35(A), J36(B)
J37(C), J38(D)
Junction
Connector
E D – E D (LHD)
E B – E B (RHD)
LG
LG
1 (LHD)
1 (RHD)
P21
Power Seat Control SW (Driver' s Seat)
Slide
Front
Vertical
Reclining
Rear
Vertical
4
W–B
Front
Rear
Up
Down
Front
Rear
Up
Down
9 6 10 5 3 2 7 8 (LHD)
9 6 5 10 3 2 8 7 (RHD)
L
Y
G
B
P
BR
W
V
P27
Power Seat Motor
(Driver' s Seat
Slide Control)
2 (LHD)
1 (RHD)
M
1 (LHD)
2 (RHD)
P23
Power Seat Motor
(Driver' s Seat
Front Vertical Control)
2 (LHD)
1 (RHD)
M
1 (LHD)
2 (RHD)
P26
Power Seat Motor
(Driver' s Seat
Reclining Control)
1
M
2
P24
Power Seat Motor
(Driver' s Seat
Lifter Control)
1 (LHD)
2 (RHD)
M
2 (LHD)
1 (RHD)

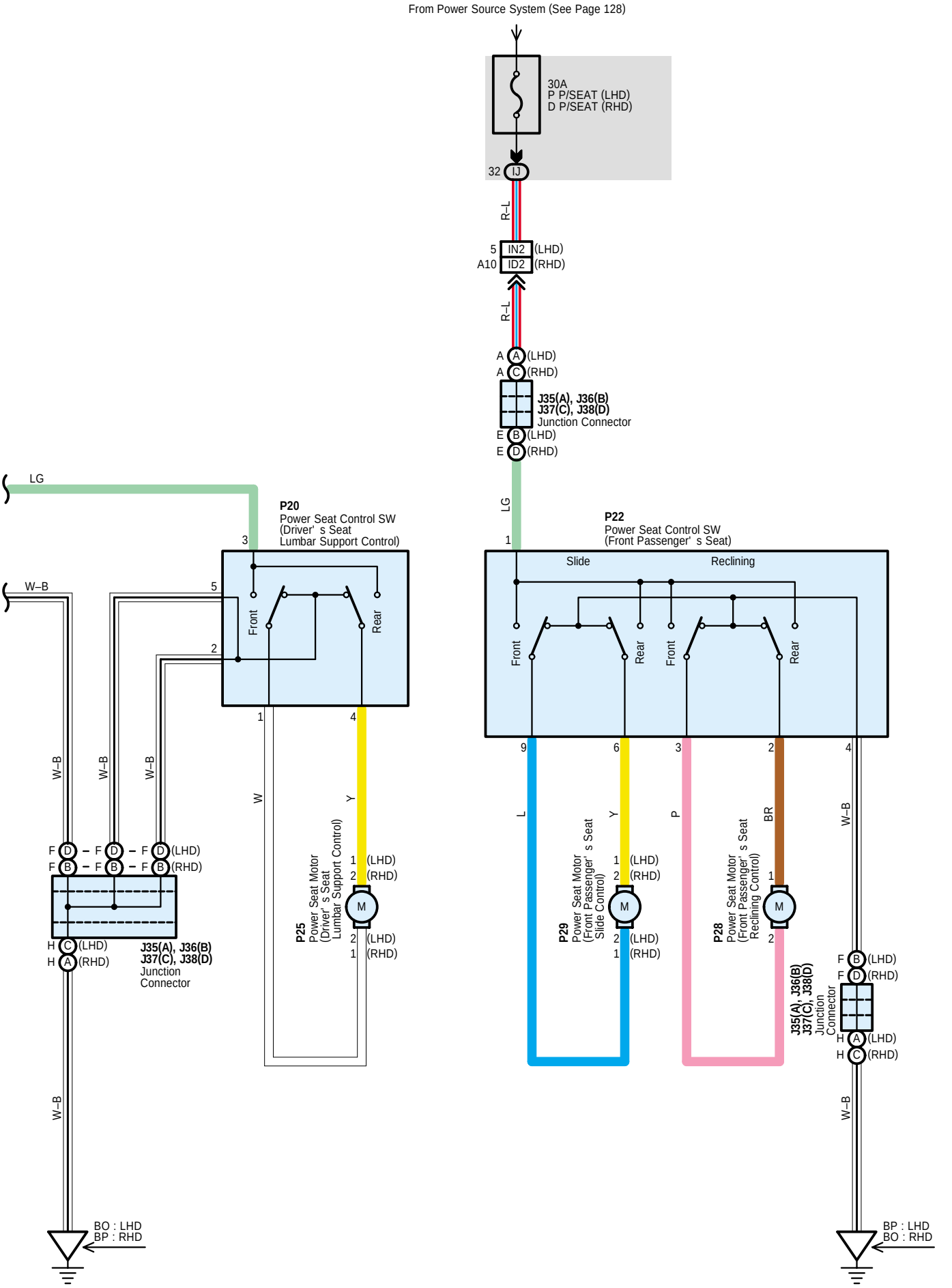
From Power Source System (See Page 128)
30A
P P/SEAT (LHD)
D P/SEAT (RHD)
32 IJ
R–L
5 IN2 (LHD)
A10 ID2 (RHD)
R–L
A A (LHD)
A C (RHD)
J35(A), J36(B)
J37(C), J38(D)
Junction Connector
E B (LHD)
E D (RHD)
LG
LG
P20
Power Seat Control SW
(Driver' s Seat
Lumbar Support Control)
3
W–B
5
2
Front
Rear
1
4
W–B
W–B
W–B
W
Y
F D – F D – F D (LHD)
F B – F B – F B (RHD)
H C (LHD)
H A (RHD)
J35(A), J36(B)
J37(C), J38(D)
Junction
Connector
P25
Power Seat Motor
(Driver' s Seat
Lumbar Support Control)
1 (LHD)
2 (RHD)
M
2 (LHD)
1 (RHD)
W–B
BO : LHD
BP : RHD
P22
Power Seat Control SW
(Front Passenger' s Seat)
1
Slide
Reclining
Front
Rear
Front
Rear
9
6
3
2
4
L
Y
P
BR
W–B
P29
Power Seat Motor
(Front Passenger' s Seat
Slide Control)
1 (LHD)
2 (RHD)
M
2 (LHD)
1 (RHD)
P28
Power Seat Motor
(Front Passenger' s Seat
Reclining Control)
1
2
M
J35(A), J36(B)
J37(C), J38(D)
Junction
Connector
F B (LHD)
F D (RHD)
H A (LHD)
H C (RHD)
W–B
BP : LHD
BO : RHD

Service Hints

P20 Power Seat Control SW (Driver's Seat Lumber Support Control)
3–1 : Closed with the driver's seat at lumbar support release operation
3–4 : Closed with the driver's seat at lumbar support hold operation
2, 5–Ground : Always continuity

P21 Power Seat Control SW (Driver's Seat)
1–9 : Closed with the driver's seat at front slide operation
1–6 : Closed with the driver's seat at rear slide operation
1–3 : Closed with the driver's seat at front reclining operation
1–2 : Closed with the driver's seat at rear reclining operation
1–10 (LHD), 1–5 (RHD) : Closed with the driver's seat at front vertical up operation
1–5 (LHD), 1–10 (RHD) : Closed with the driver's seat at front vertical down operation
1–7 (LHD), 1–8 (RHD) : Closed with the driver's seat at lifter up operation
1–8 (LHD), 1–7 (RHD) : Closed with the driver's seat at lifter down operation
4–Ground : Always continuity

P22 Power Seat Control SW (Front Passenger's Seat)
1–9 : Closed with the front passenger's seat at front slide operation
1–6 : Closed with the front passenger's seat at rear slide operation
1–3 : Closed with the front passenger's seat at front reclining operation
1–2 : Closed with the front passenger's seat at rear reclining operation
4–Ground : Always continuity

○ : Parts Location

Code		See Page	Code		See Page	Code	See Page
J35	A	56 (*8)	J38	D	76 (*17)	P25	56 (*8)
		57 (*9)			77 (*18)		57 (*9)
		76 (*17)	P20		56 (*8)		76 (*17)
		77 (*18)			57 (*9)		77 (*18)
J36	B	56 (*8)			76 (*17)	P26	56 (*8)
		57 (*9)			77 (*18)		76 (*17)
		76 (*17)	P21		56 (*8)	P27	56 (*8)
		77 (*18)			76 (*17)		76 (*17)
J37	C	56 (*8)	P22		56 (*8)	P28	56 (*8)
		57 (*9)			76 (*17)		76 (*17)
		76 (*17)	P23		56 (*8)	P29	56 (*8)
		77 (*18)			76 (*17)		76 (*17)
J38	D	56 (*8)	P24		56 (*8)		
		57 (*9)			76 (*17)		

: Junction Block and Wire Harness Connector

Code	See Page	Junction Block and Wire Harness (Connector Location)
IJ	27 (LHD)	Instrument Panel Wire and Driver Side J/B (Lower Finish Panel)
	29 (RHD)	

: Connector Joining Wire Harness and Wire Harness

Code	See Page	Joining Wire Harness and Wire Harness (Connector Location)
ID2	90 (LHD)	Instrument Panel Wire and Floor No.2 Wire (Left Kick Panel)
	114 (RHD)	
IN2	94 (LHD)	Instrument Panel Wire and Floor Wire (Right Kick Panel)
	118 (RHD)	

* 1 : LHD 1GR–FE * 2 : LHD 3RZ–FE * 3 : LHD 1KD–FTV * 4 : LHD 1KZ–TE * 5 : LHD 5L–E * 6 : LHD 5–Door * 7 : LHD 3–Door
* 8 : LHD 8Way Power Seat * 9 : LHD Except 8Way Power Seat * 10 : RHD 1GR–FE * 11 : RHD 3RZ–FE * 12 : RHD 1KD–FTV
* 13 : RHD 1KZ–TE * 14 : RHD 5L–E * 15 : RHD 5–Door * 16 : RHD 3–Door * 17 : RHD 8Way Power Seat
* 18 : RHD Except 8Way Power Seat

▽ : **Ground Points**

Code	See Page	Ground Points Location
BO	96 (*6)	Under the Driver's Seat
	100 (*7)	
	120 (*15)	Under the Front Passenger's Seat
	124 (*16)	
BP	96 (*6)	Under the Front Passenger's Seat
	100 (*7)	
	120 (*15)	Under the Driver's Seat
	124 (*16)	

* 1 : LHD 1GR-FE * 2 : LHD 3RZ-FE * 3 : LHD 1KD-FTV * 4 : LHD 1KZ-TE * 5 : LHD 5L-E * 6 : LHD 5-Door * 7 : LHD 3-Door
* 8 : LHD 8Way Power Seat * 9 : LHD Except 8Way Power Seat * 10 : RHD 1GR-FE * 11 : RHD 3RZ-FE * 12 : RHD 1KD-FTV
* 13 : RHD 1KZ-TE * 14 : RHD 5L-E * 15 : RHD 5-Door * 16 : RHD 3-Door * 17 : RHD 8Way Power Seat
* 18 : RHD Except 8Way Power Seat

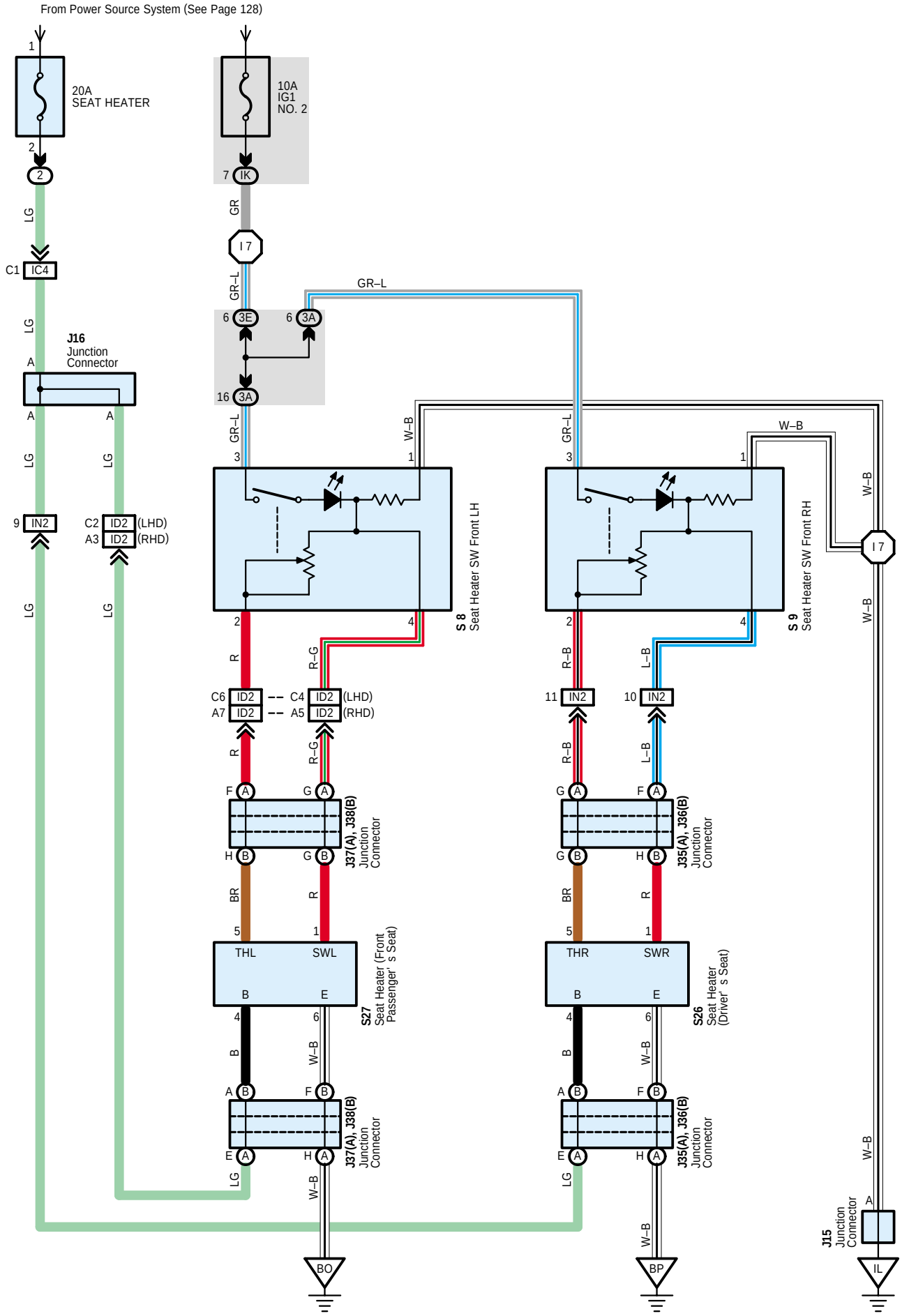
From Power Source System (See Page 128)
20A
SEAT HEATER
10A
IG1
NO. 2
J16
Junction
Connector
S 8
Seat Heater SW Front LH
S 9
Seat Heater SW Front RH
J37(A), J38(B)
Junction
Connector
J35(A), J36(B)
Junction
Connector
S27
Seat Heater (Front
Passenger's Seat)
S26
Seat Heater
(Driver's Seat)
J15
Junction
Connector
(LHD)
(RHD)
THL
SWL
THR
SWR
BO
BP
IL

Service Hints

S8, S9 Seat Heater SW Front LH, RH

3-Ground : Approx. 12 volts with the ignition SW at ON position
1-Ground : Always continuity

: Parts Location

Code		See Page	Code		See Page	Code	See Page
J15		50 (LHD)	J36	B	77 (*18)	S9	51 (LHD)
		70 (RHD)	J37	A	56 (*8)		71 (RHD)
J16		50 (LHD)			57 (*9)	S26	56 (*8)
		70 (RHD)			76 (*17)		57 (*9)
J35	A	56 (*8)			77 (*18)		76 (*17)
		57 (*9)	J38	B	56 (*8)		77 (*18)
		76 (*17)			57 (*9)	S27	56 (*8)
		77 (*18)			76 (*17)		57 (*9)
J36	B	56 (*8)			77 (*18)		76 (*17)
		57 (*9)	S8		51 (LHD)		77 (*18)
		76 (*17)			71 (RHD)		

: Relay Blocks

Code	See Page	Relay Blocks (Relay Block Location)
2	23	Engine Room R/B (Engine Compartment Left)

: Junction Block and Wire Harness Connector

Code	See Page	Junction Block and Wire Harness (Connector Location)
IK	27 (LHD)	Instrument Panel Wire and Driver Side J/B (Lower Finish Panel)
	29 (RHD)	
3A	36 (LHD)	Instrument Panel Wire and J/B No.3 (Instrument Panel Reinforcement Right)
	36 (RHD)	Instrument Panel Wire and J/B No.3 (Instrument Panel Reinforcement Left)
3E	36 (LHD)	Instrument Panel Wire and J/B No.3 (Instrument Panel Reinforcement Right)
	36 (RHD)	Instrument Panel Wire and J/B No.3 (Instrument Panel Reinforcement Left)

: Connector Joining Wire Harness and Wire Harness

Code	See Page	Joining Wire Harness and Wire Harness (Connector Location)
IC4	88 (LHD)	Instrument Panel Wire and Engine Room Main Wire (Left Kick Panel)
	112 (RHD)	
ID2	90 (LHD)	Instrument Panel Wire and Floor No.2 Wire (Left Kick Panel)
	114 (RHD)	
IN2	94 (LHD)	Instrument Panel Wire and Floor Wire (Right Kick Panel)
	118 (RHD)	

* 1 : LHD 1GR-FE * 2 : LHD 3RZ-FE * 3 : LHD 1KD-FTV * 4 : LHD 1KZ-TE * 5 : LHD 5L-E * 6 : LHD 5-Door * 7 : LHD 3-Door
* 8 : LHD 8Way Power Seat * 9 : LHD Except 8Way Power Seat * 10 : RHD 1GR-FE * 11 : RHD 3RZ-FE * 12 : RHD 1KD-FTV
* 13 : RHD 1KZ-TE * 14 : RHD 5L-E * 15 : RHD 5-Door * 16 : RHD 3-Door * 17 : RHD 8Way Power Seat
* 18 : RHD Except 8Way Power Seat

▽ : **Ground Points**

Code	See Page	Ground Points Location
IL	88 (LHD)	Near the Right Side of Steering Column
	112 (RHD)	Instrument Panel Brace RH
BO	96 (*6)	Under the Driver's Seat
	100 (*7)	
	120 (*15)	Under the Front Passenger's Seat
	124 (*16)	
BP	96 (*6)	Under the Front Passenger's Seat
	100 (*7)	
	120 (*15)	Under the Driver's Seat
	124 (*16)	

◯ : **Splice Points**

Code	See Page	Wire Harness with Splice Points	Code	See Page	Wire Harness with Splice Points
I7	90 (LHD)	Instrument Panel Wire	I7	114 (RHD)	Instrument Panel Wire

* 1 : LHD 1GR-FE * 2 : LHD 3RZ-FE * 3 : LHD 1KD-FTV * 4 : LHD 1KZ-TE * 5 : LHD 5L-E * 6 : LHD 5-Door * 7 : LHD 3-Door
* 8 : LHD 8Way Power Seat * 9 : LHD Except 8Way Power Seat * 10 : RHD 1GR-FE * 11 : RHD 3RZ-FE * 12 : RHD 1KD-FTV
* 13 : RHD 1KZ-TE * 14 : RHD 5L-E * 15 : RHD 5-Door * 16 : RHD 3-Door * 17 : RHD 8Way Power Seat
* 18 : RHD Except 8Way Power Seat

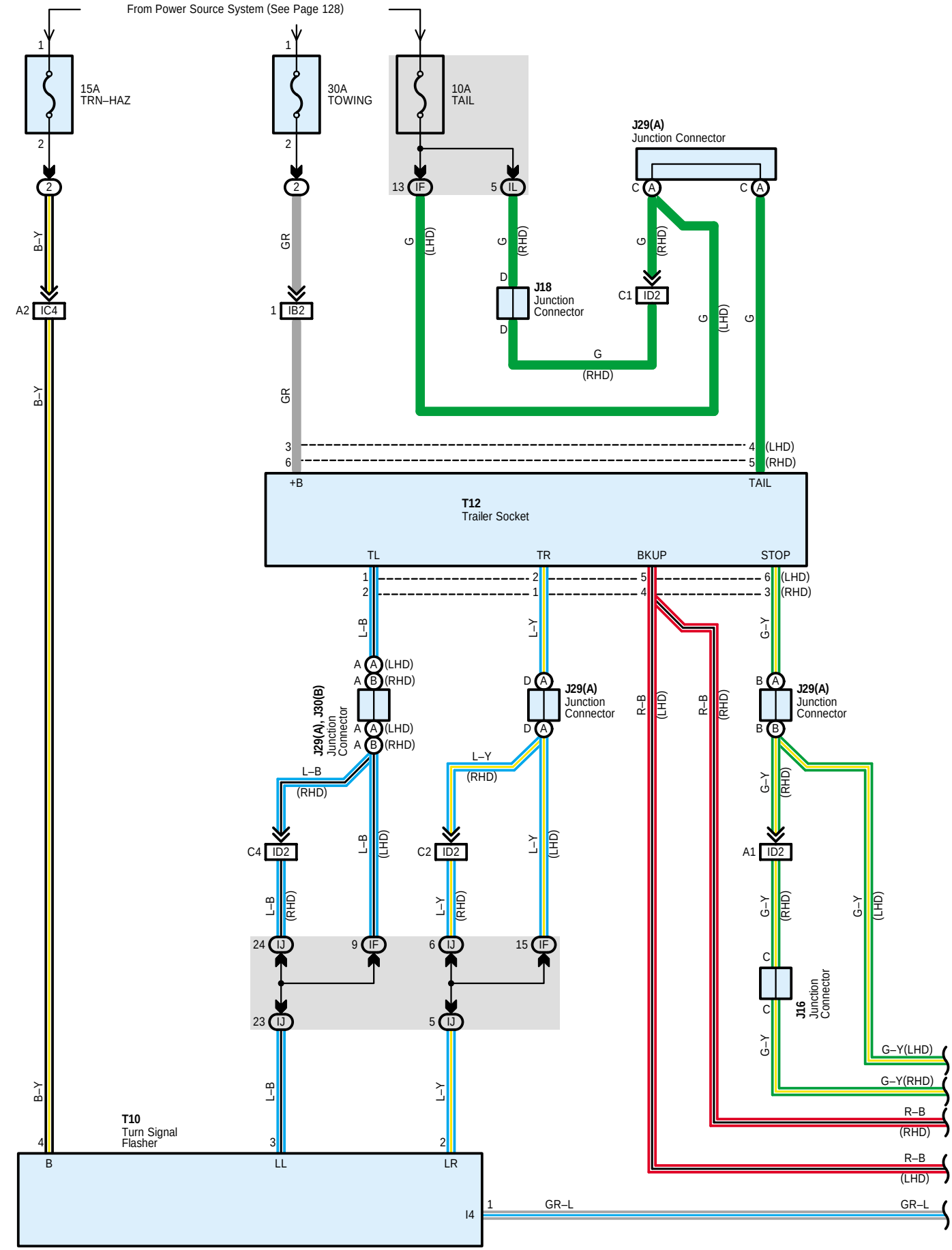
From Power Source System (See Page 128)
15A
TRN–HAZ
30A
TOWING
10A
TAIL
J29(A)
Junction Connector
J18
Junction
Connector
IC4
IB2
ID2
T12
Trailer Socket
+B
TAIL
TL
TR
BKUP
STOP
J29(A), J30(B)
Junction
Connector
J29(A)
Junction
Connector
J16
Junction
Connector
T10
Turn Signal
Flasher
B
LL
LR
I4
GR–L
G–Y(LHD)
G–Y(RHD)
R–B
(RHD)
R–B
(LHD)

From Power Source System (See Page 128)

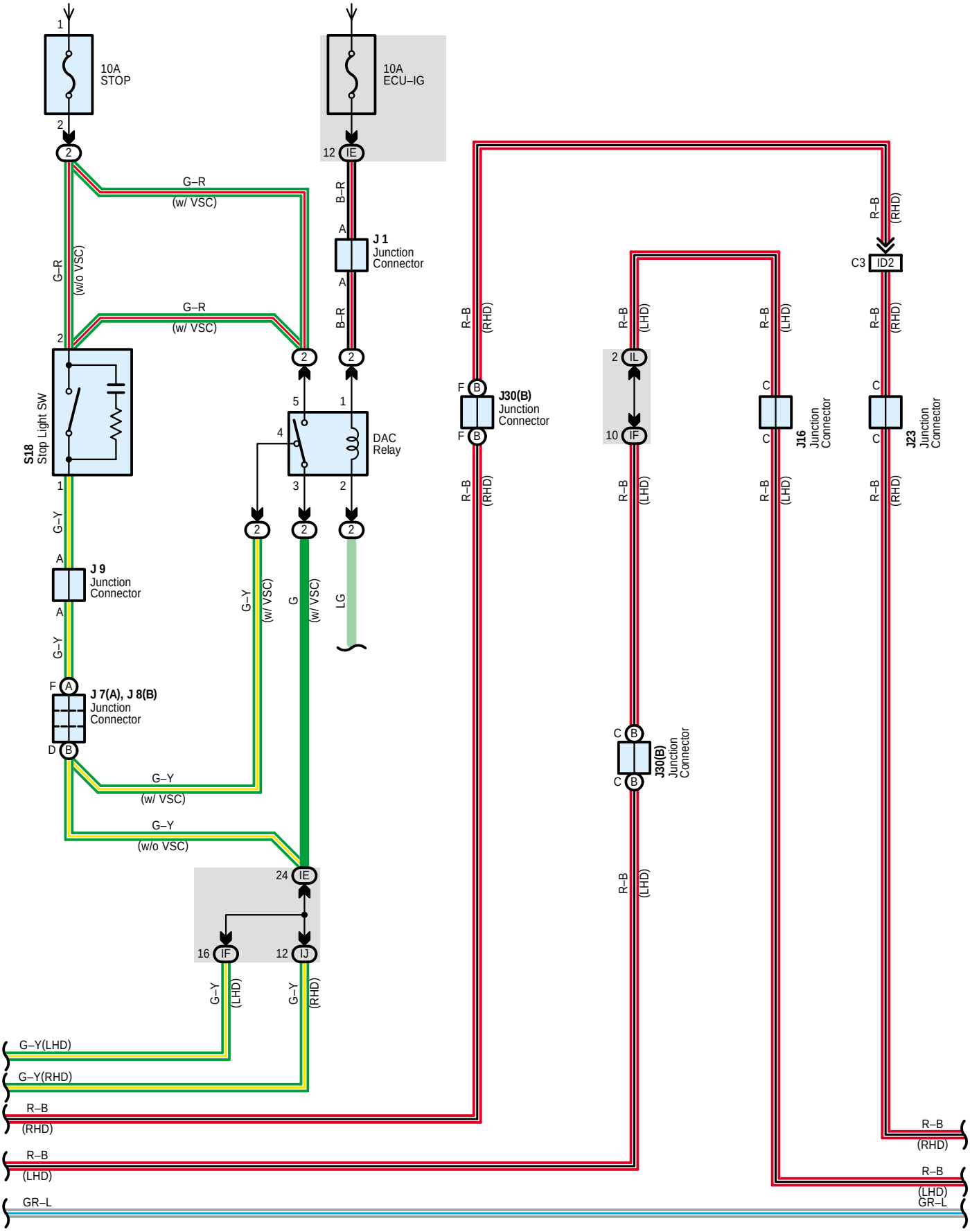

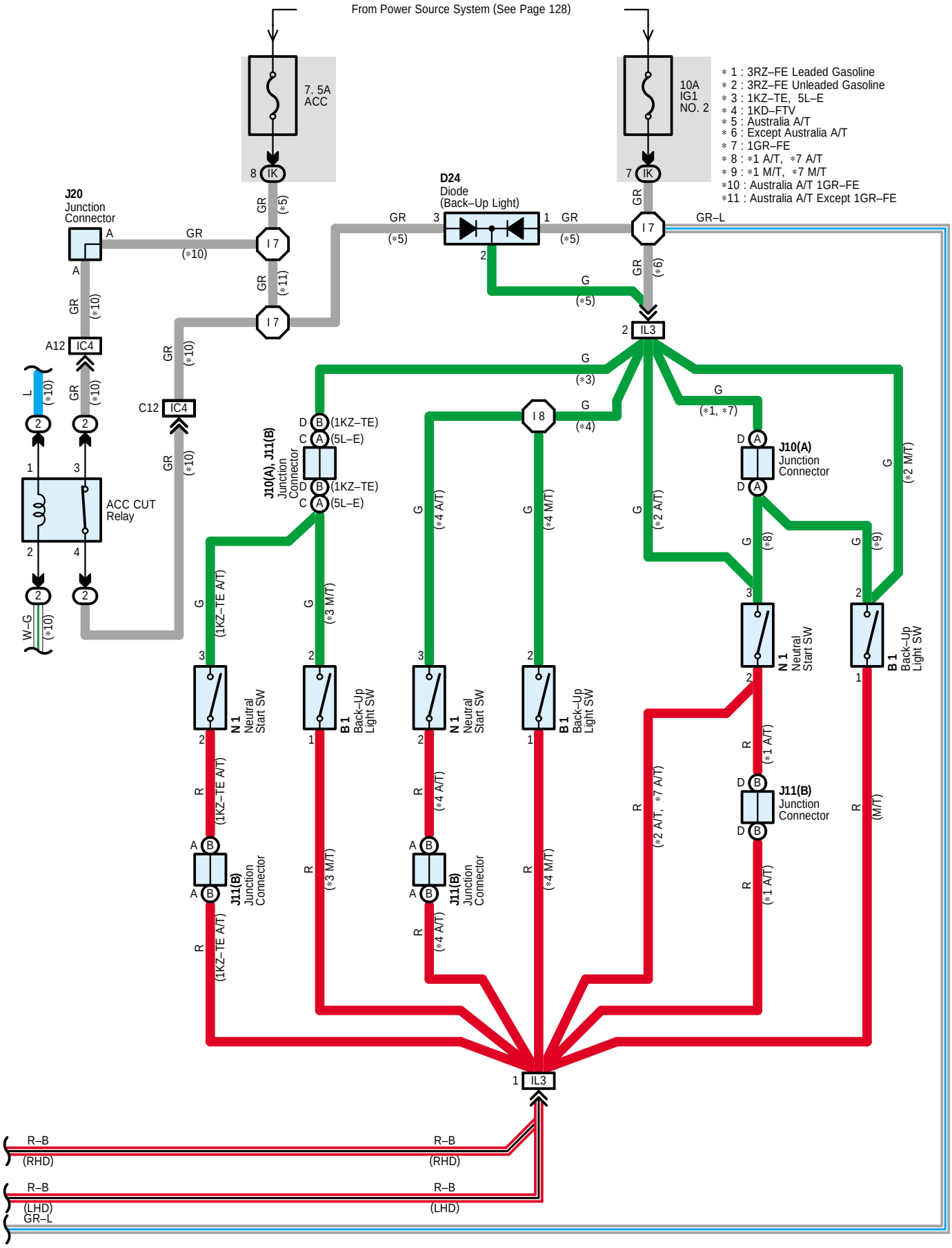
From Power Source System (See Page 128)
7. 5A
ACC
10A
IG1
NO. 2
∗ 1 : 3RZ–FE Leaded Gasoline
∗ 2 : 3RZ–FE Unleaded Gasoline
∗ 3 : 1KZ–TE, 5L–E
∗ 4 : 1KD–FTV
∗ 5 : Australia A/T
∗ 6 : Except Australia A/T
∗ 7 : 1GR–FE
∗ 8 : ∗1 A/T, ∗7 A/T
∗ 9 : ∗1 M/T, ∗7 M/T
∗10 : Australia A/T 1GR–FE
∗11 : Australia A/T Except 1GR–FE
J20
Junction
Connector
D24
Diode
(Back–Up Light)
ACC CUT
Relay
J10(A), J11(B)
Junction
Connector
(1KZ–TE)
(5L–E)
J10(A)
Junction
Connector
J11(B)
Junction
Connector
N 1
Neutral
Start SW
B 1
Back–Up
Light SW
IL3
R–B
(RHD)
(LHD)
GR–L

Service Hints

T12 Trailer Socket

4 (LHD), 5 (RHD)–Ground : Approx. 12 volts with light control SW at TAIL or HEAD position
5 (LHD), 4 (RHD)–Ground : Approx. 12 volts with ignition SW at ON position and shift lever in R position

: Parts Location

Code	See Page	Code	See Page	Code	See Page
B1	38 (*1)	J1	67 (*14)	J30 B	52 (*6)
	40 (*2)	J7 A	50 (LHD)		54 (*7)
	42 (*3)		70 (RHD)		72 (*15)
	44 (*4)	J8 B	50 (LHD)		74 (*16)
	46 (*5)		70 (RHD)	N1	39 (*1)
	58 (*10)	J9	50 (LHD)		41 (*2)
	60 (*11)		70 (RHD)		43 (*3)
	62 (*12)	J10 A	50 (LHD)		45 (*4)
	64 (*13)		70 (RHD)		59 (*10)
	66 (*14)	J11 B	50 (LHD)		61 (*11)
D24	69 (RHD)		70 (RHD)		63 (*12)
J1	39 (*1)	J16	50 (LHD)		65 (*13)
	41 (*2)		70 (RHD)	S18	51 (LHD)
	43 (*3)	J18	70 (RHD)		71 (RHD)
	45 (*4)	J20	70 (RHD)	T10	51 (LHD)
	47 (*5)	J23	70 (RHD)		71 (RHD)
	59 (*10)	J29 A	52 (*6)	T12	53 (*6)
	61 (*11)		54 (*7)		55 (*7)
	63 (*12)		72 (*15)		73 (*15)
	65 (*13)		74 (*16)		75 (*16)

: Relay Blocks

Code	See Page	Relay Blocks (Relay Block Location)
2	23	Engine Room R/B (Engine Compartment Left)

: Junction Block and Wire Harness Connector

Code	See Page	Junction Block and Wire Harness (Connector Location)
IE	26 (LHD)	Engine Room Main Wire and Driver Side J/B (Lower Finish Panel)
	28 (RHD)	
IF	26 (LHD)	Floor No.2 Wire and Driver Side J/B (Lower Finish Panel)
IJ	27 (LHD)	Instrument Panel Wire and Driver Side J/B (Lower Finish Panel)
	29 (RHD)	
IK	27 (LHD)	
	29 (RHD)	
IL	27 (LHD)	
	29 (RHD)	

* 1 : LHD 1GR–FE * 2 : LHD 3RZ–FE * 3 : LHD 1KD–FTV * 4 : LHD 1KZ–TE * 5 : LHD 5L–E * 6 : LHD 5–Door * 7 : LHD 3–Door
* 8 : LHD 8Way Power Seat * 9 : LHD Except 8Way Power Seat * 10 : RHD 1GR–FE * 11 : RHD 3RZ–FE * 12 : RHD 1KD–FTV
* 13 : RHD 1KZ–TE * 14 : RHD 5L–E * 15 : RHD 5–Door * 16 : RHD 3–Door * 17 : RHD 8Way Power Seat
* 18 : RHD Except 8Way Power Seat

: Connector Joining Wire Harness and Wire Harness

Code	See Page	Joining Wire Harness and Wire Harness (Connector Location)
IB2	88 (LHD)	Floor No.2 Wire and Engine Room Main Wire (Left Kick Panel)
	112 (RHD)	
IC4	88 (LHD)	Instrument Panel Wire and Engine Room Main Wire (Left Kick Panel)
	112 (RHD)	
ID2	114 (RHD)	Instrument Panel Wire and Floor No.2 Wire (Left Kick Panel)
IL3	92 (LHD)	Engine Wire and Instrument Panel Wire (Right Side of the Blower Unit)
	116 (RHD)	Engine Wire and Instrument Panel Wire (Left Side of the Blower Unit)

: Splice Points

Code	See Page	Wire Harness with Splice Points	Code	See Page	Wire Harness with Splice Points
I7	90 (LHD)	Instrument Panel Wire	I8	90 (LHD)	Engine Wire
	114 (RHD)			114 (RHD)	

Accessory Meter

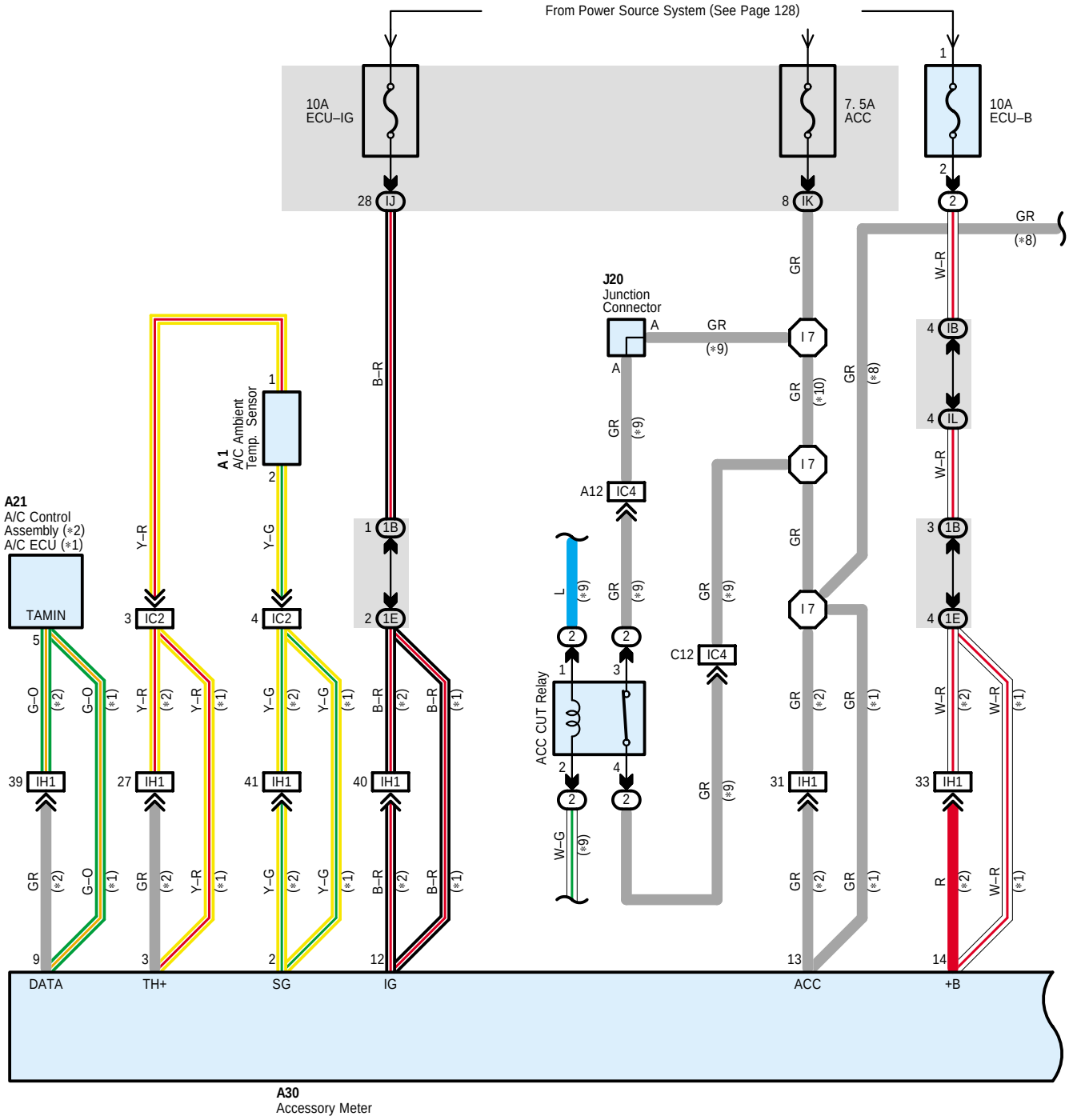

* 1 : w/ Navigation System
* 2 : w/o Navigation System
* 3 : 3RZ–FE Unleaded Gasoline
* 4 : 3RZ–FE Leaded Gasoline
* 5 : 1KD–FTV
* 6 : 1KZ–TE
* 7 : 5L–E
* 8 : Australia A/T
* 9 : 1GR–FE
*10 : Except 1GR–FE

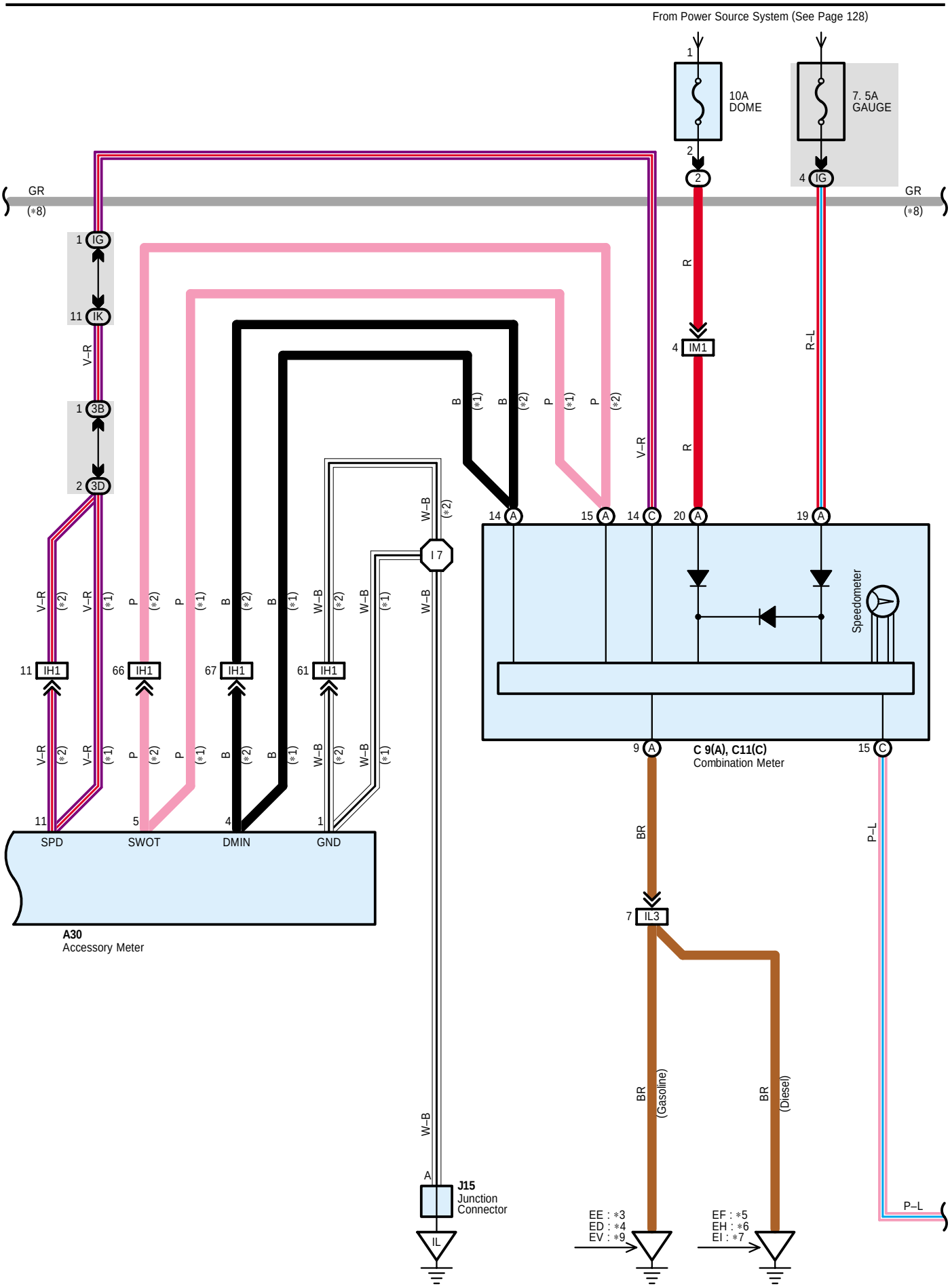
From Power Source System (See Page 128)
10A
DOME
7. 5A
GAUGE
GR
(*8)
IG
IK
3B
3D
IM1
IH1
I 7
IL3
J15
Junction
Connector
IL
A30
Accessory Meter
SPD
SWOT
DMIN
GND
C 9(A), C11(C)
Combination Meter
Speedometer
V–R
R
R–L
B
P
W–B
BR
P–L
(*1)
(*2)
(Gasoline)
(Diesel)
EE : *3
ED : *4
EV : *9
EF : *5
EH : *6
EI : *7

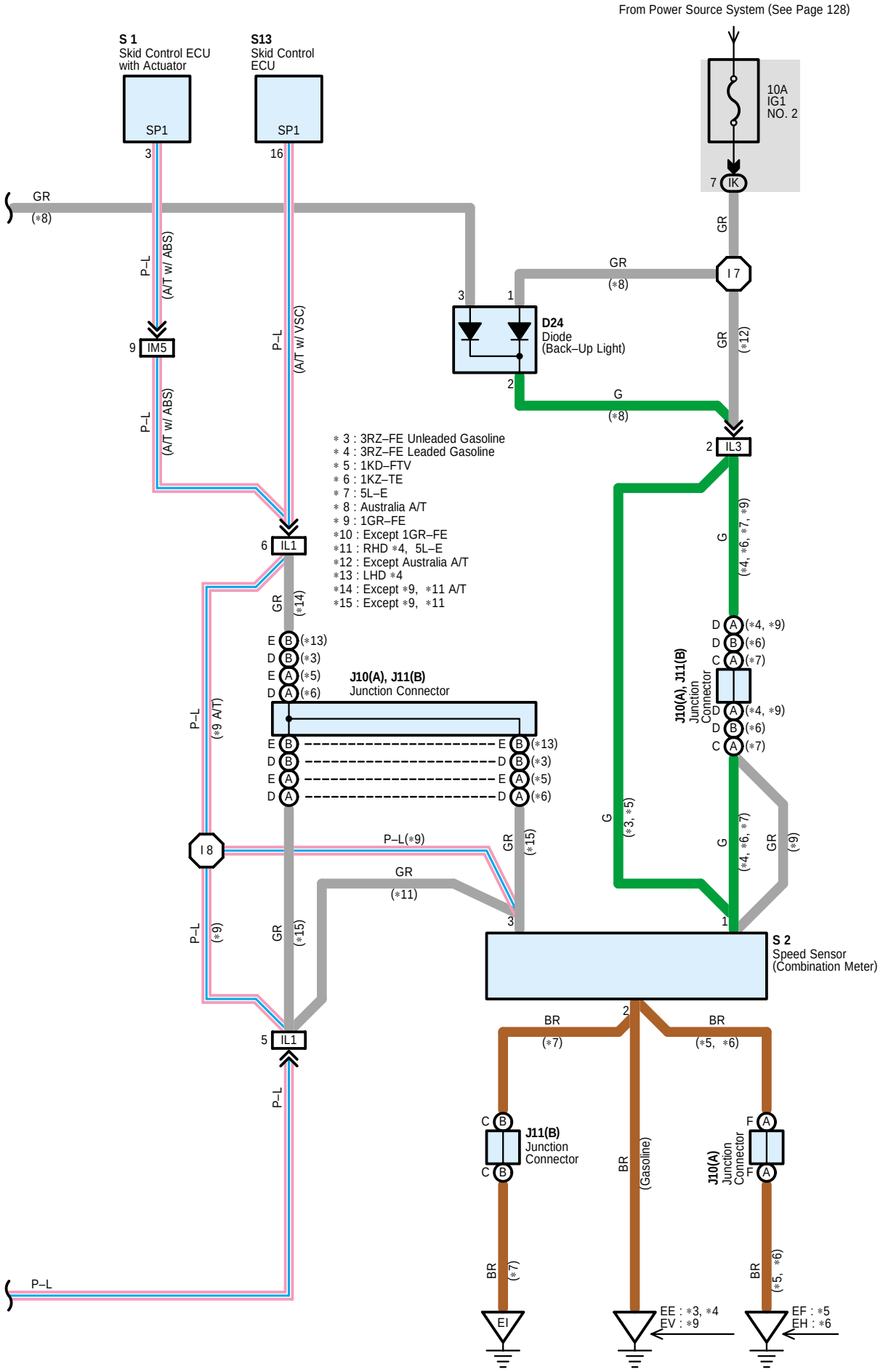
From Power Source System (See Page 128)
S 1
Skid Control ECU
with Actuator
SP1
S13
Skid Control
ECU
SP1
10A
IG1
NO. 2
7 IK
GR
(*8)
P–L
(A/T w/ ABS)
9 IM5
P–L
(A/T w/ ABS)
P–L
(A/T w/ VSC)
GR
(*8)
I 7
GR
(*12)
D24
Diode
(Back–Up Light)
G
(*8)
2 IL3
* 3 : 3RZ–FE Unleaded Gasoline
* 4 : 3RZ–FE Leaded Gasoline
* 5 : 1KD–FTV
* 6 : 1KZ–TE
* 7 : 5L–E
* 8 : Australia A/T
* 9 : 1GR–FE
*10 : Except 1GR–FE
*11 : RHD *4, 5L–E
*12 : Except Australia A/T
*13 : LHD *4
*14 : Except *9, *11 A/T
*15 : Except *9, *11
6 IL1
GR
(*14)
G
(*4, *6, *7, *9)
E B (*13)
D B (*3)
E A (*5)
D A (*6)
J10(A), J11(B)
Junction Connector
D A (*4, *9)
D B (*6)
C A (*7)
J10(A), J11(B)
Junction
Connector
D A (*4, *9)
D B (*6)
C A (*7)
P–L
(*9 A/T)
I 8
P–L(*9)
GR
(*11)
GR
(*15)
G
(*3, *5)
G
(*4, *6, *7)
GR
(*9)
P–L
(*9)
GR
(*15)
S 2
Speed Sensor
(Combination Meter)
5 IL1
P–L
BR
(*7)
BR
(*5, *6)
C B
J11(B)
Junction
Connector
C B
BR
(Gasoline)
J10(A)
Junction
Connector
F A
F A
BR
(*7)
BR
(*5, *6)
P–L
EI
EE : *3, *4
EV : *9
EF : *5
EH : *6

Service Hints

A30 Accessory Meter

14–Ground : Always approx. 12 volts
12–Ground : Approx. 12 volts with the ignition SW at ON position
1–Ground : Always continuity

: Parts Location

Code	See Page
A1	38 (*1)
	40 (*2)
	42 (*3)
	44 (*4)
	46 (*5)
	58 (*10)
	60 (*11)
	62 (*12)
	64 (*13)
	66 (*14)
A21	48 (LHD)
	68 (RHD)
A30	48 (LHD)
	68 (RHD)
C9 A	49 (LHD)
	69 (RHD)

Code	See Page
C11 C	49 (LHD)
	69 (RHD)
D24	69 (RHD)
J10 A	50 (LHD)
	70 (RHD)
J11 B	50 (LHD)
	70 (RHD)
J15	50 (LHD)
	70 (RHD)
J20	50 (LHD)
	70 (RHD)
S1	39 (*1)
	41 (*2)
	43 (*3)
	45 (*4)
	59 (*10)

Code	See Page
S1	61 (*11)
	63 (*12)
	65 (*13)
S2	39 (*1)
	41 (*2)
	43 (*3)
	45 (*4)
	47 (*5)
	59 (*10)
	61 (*11)
	63 (*12)
	65 (*13)
	67 (*14)
S13	51 (LHD)
	71 (RHD)

: Relay Blocks

Code	See Page	Relay Blocks (Relay Block Location)
2	23	Engine Room R/B (Engine Compartment Left)

: Junction Block and Wire Harness Connector

Code	See Page	Junction Block and Wire Harness (Connector Location)
IB	26 (LHD)	Engine Room Main Wire and Driver Side J/B (Lower Finish Panel)
	28 (RHD)	
IG	27 (LHD)	Instrument Panel Wire and Driver Side J/B (Lower Finish Panel)
	29 (RHD)	
IJ	27 (LHD)	
	29 (RHD)	
IK	27 (LHD)	
	29 (RHD)	
IL	27 (LHD)	
	29 (RHD)	
1B	32 (LHD)	Instrument Panel Wire and J/B No.1 (Instrument Panel Reinforcement Left)
	32 (RHD)	Instrument Panel Wire and J/B No.1 (Instrument Panel Reinforcement Right)
1E	32 (LHD)	Instrument Panel Wire and J/B No.1 (Instrument Panel Reinforcement Left)
	32 (RHD)	Instrument Panel Wire and J/B No.1 (Instrument Panel Reinforcement Right)
3B	36 (LHD)	Instrument Panel Wire and J/B No.3 (Instrument Panel Reinforcement Right)
	36 (RHD)	Instrument Panel Wire and J/B No.3 (Instrument Panel Reinforcement Left)
3D	36 (LHD)	Instrument Panel Wire and J/B No.3 (Instrument Panel Reinforcement Right)
	36 (RHD)	Instrument Panel Wire and J/B No.3 (Instrument Panel Reinforcement Left)

* 1 : LHD 1GR–FE * 2 : LHD 3RZ–FE * 3 : LHD 1KD–FTV * 4 : LHD 1KZ–TE * 5 : LHD 5L–E * 6 : LHD 5–Door * 7 : LHD 3–Door
* 8 : LHD 8Way Power Seat * 9 : LHD Except 8Way Power Seat * 10 : RHD 1GR–FE * 11 : RHD 3RZ–FE * 12 : RHD 1KD–FTV
* 13 : RHD 1KZ–TE * 14 : RHD 5L–E * 15 : RHD 5–Door * 16 : RHD 3–Door * 17 : RHD 8Way Power Seat
* 18 : RHD Except 8Way Power Seat

: Connector Joining Wire Harness and Wire Harness

Code	See Page	Joining Wire Harness and Wire Harness (Connector Location)
IC2	88 (LHD)	Instrument Panel Wire and Engine Room Main Wire (Left Kick Panel)
	112 (RHD)	
IC4	88 (LHD)	
	112 (RHD)	
IH1	90 (LHD)	Instrument Panel Wire and Instrument Panel No.2 Wire (Instrument Panel Brace LH)
	114 (RHD)	
IL1	92 (LHD)	Engine Wire and Instrument Panel Wire (Right Side of the Blower Unit)
	116 (RHD)	Engine Wire and Instrument Panel Wire (Left Side of the Blower Unit)
IL3	92 (LHD)	Engine Wire and Instrument Panel Wire (Right Side of the Blower Unit)
	116 (RHD)	Engine Wire and Instrument Panel Wire (Left Side of the Blower Unit)
IM1	92 (LHD)	Instrument Panel Wire and Engine Room Main Wire (Right Kick Panel)
	116 (RHD)	
IM5	92 (LHD)	
	116 (RHD)	

: Ground Points

Code	See Page	Ground Points Location
ED	80 (*2)	Ignition Coil Bracket
	104 (*11)	
EE	80 (*2)	Intake Manifold
	104 (*11)	
EF	82 (*3)	Rear Part of Cylinder Block
	106 (*12)	
EH	84 (*4)	
	108 (*13)	
EI	86 (*5)	
	110 (*14)	
EV	78 (*1)	Rear Side of Left Bank Cylinder Block
	102 (*10)	
IL	88 (LHD)	Near the Right Side of Steering Column
	112 (RHD)	Instrument Panel Brace RH

: Splice Points

Code	See Page	Wire Harness with Splice Points	Code	See Page	Wire Harness with Splice Points
I7	90 (LHD)	Instrument Panel Wire	I8	90 (LHD)	Engine Wire
	114 (RHD)			114 (RHD)	

* 1 : LHD 1GR-FE * 2 : LHD 3RZ-FE * 3 : LHD 1KD-FTV * 4 : LHD 1KZ-TE * 5 : LHD 5L-E * 6 : LHD 5-Door * 7 : LHD 3-Door
* 8 : LHD 8Way Power Seat * 9 : LHD Except 8Way Power Seat * 10 : RHD 1GR-FE * 11 : RHD 3RZ-FE * 12 : RHD 1KD-FTV
* 13 : RHD 1KZ-TE * 14 : RHD 5L-E * 15 : RHD 5-Door * 16 : RHD 3-Door * 17 : RHD 8Way Power Seat
* 18 : RHD Except 8Way Power Seat

Navigation System (LHD)

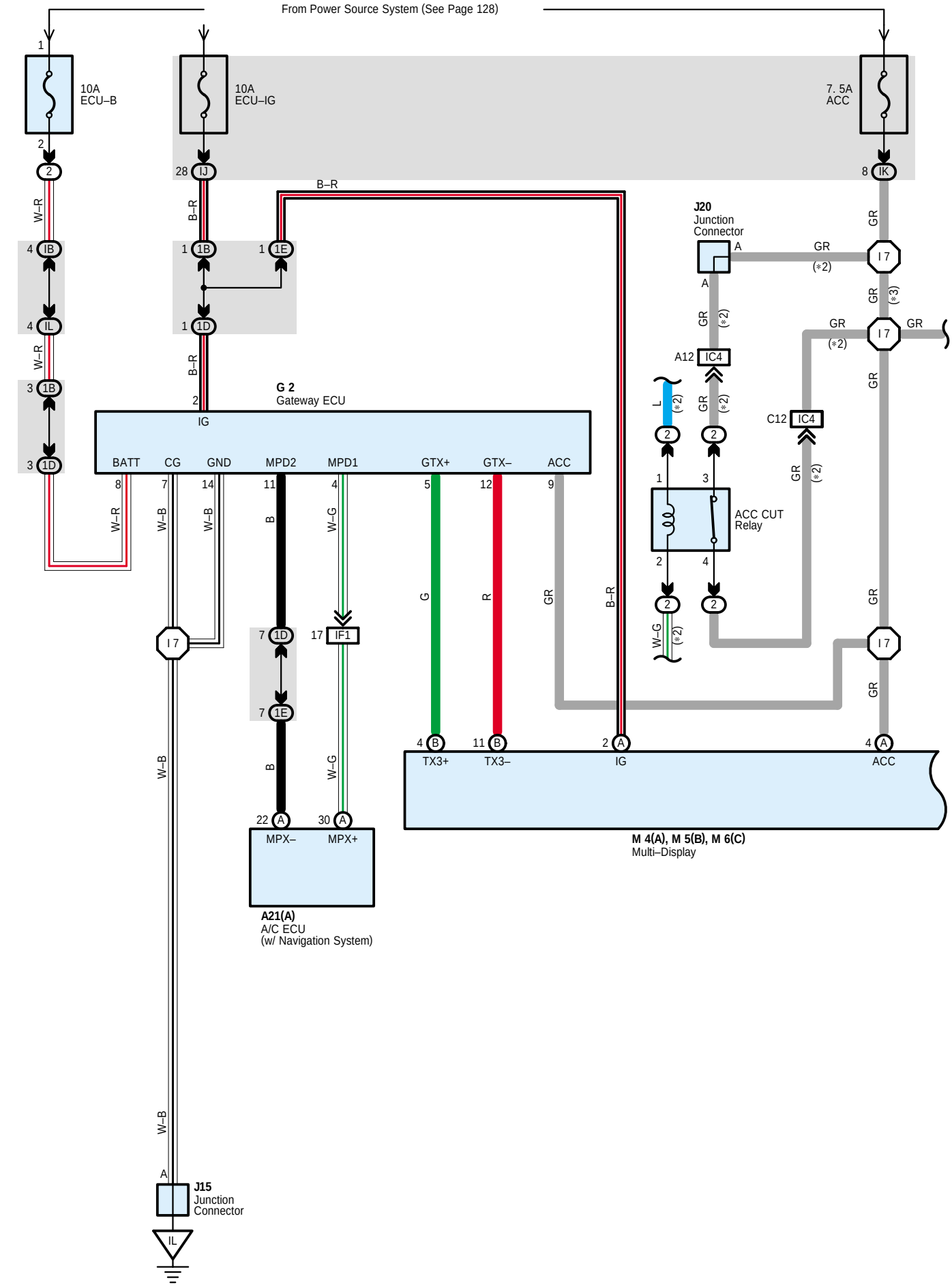

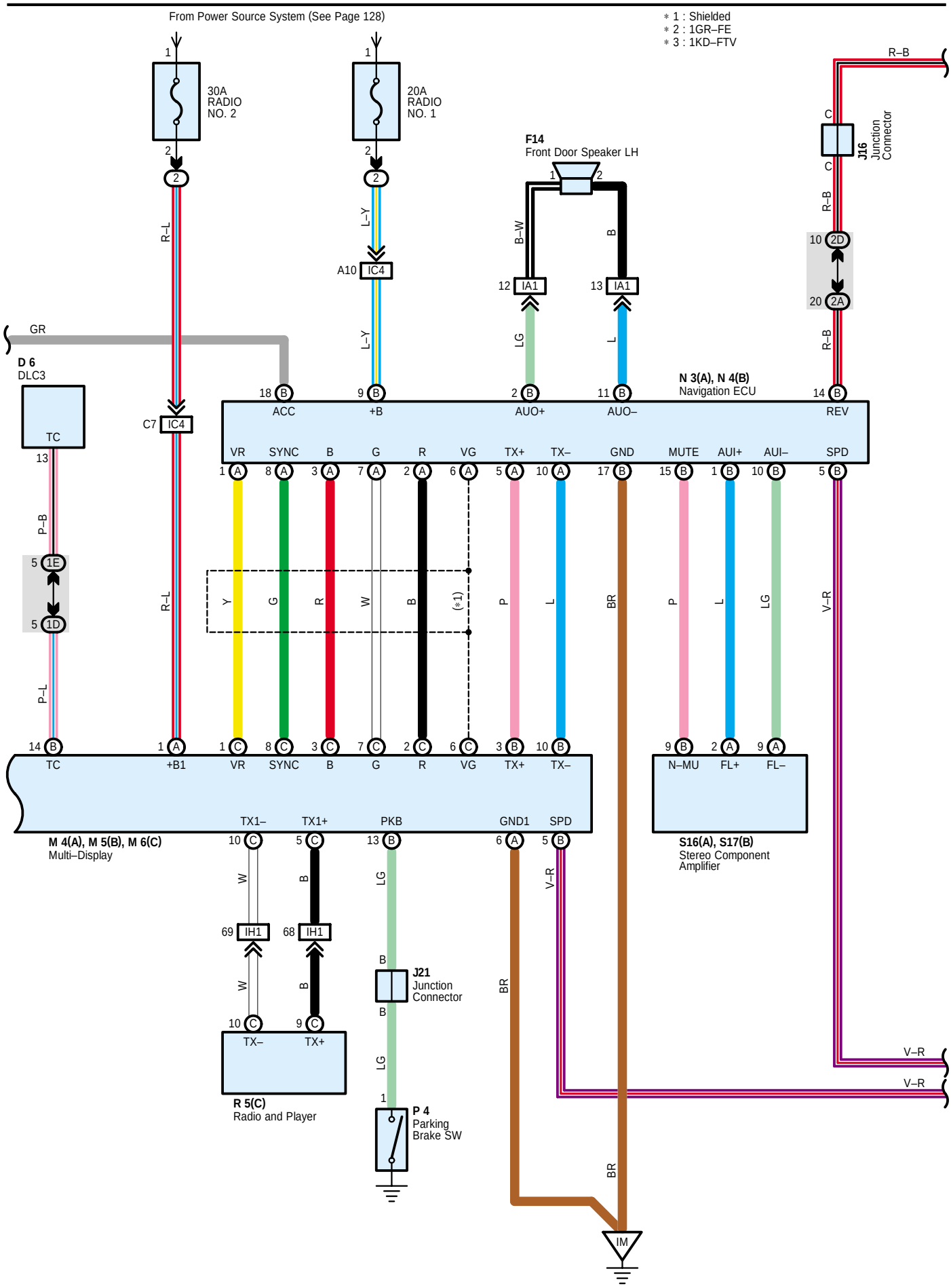
From Power Source System (See Page 128)
* 1 : Shielded
* 2 : 1GR–FE
* 3 : 1KD–FTV
30A RADIO NO. 2
20A RADIO NO. 1
F14 Front Door Speaker LH
J16 Junction Connector
D 6 DLC3
N 3(A), N 4(B) Navigation ECU
M 4(A), M 5(B), M 6(C) Multi–Display
S16(A), S17(B) Stereo Component Amplifier
R 5(C) Radio and Player
J21 Junction Connector
P 4 Parking Brake SW
IC4
IA1
IH1
IM
ACC
+B
AUO+
AUO–
REV
VR
SYNC
B
G
R
VG
TX+
TX–
GND
MUTE
AUI+
AUI–
SPD
TC
+B1
N–MU
FL+
FL–
TX1–
TX1+
PKB
GND1
R–B
R–L
L–Y
B–W
LG
L
GR
P–B
P–L
Y
W
(*1)
P
BR
V–R

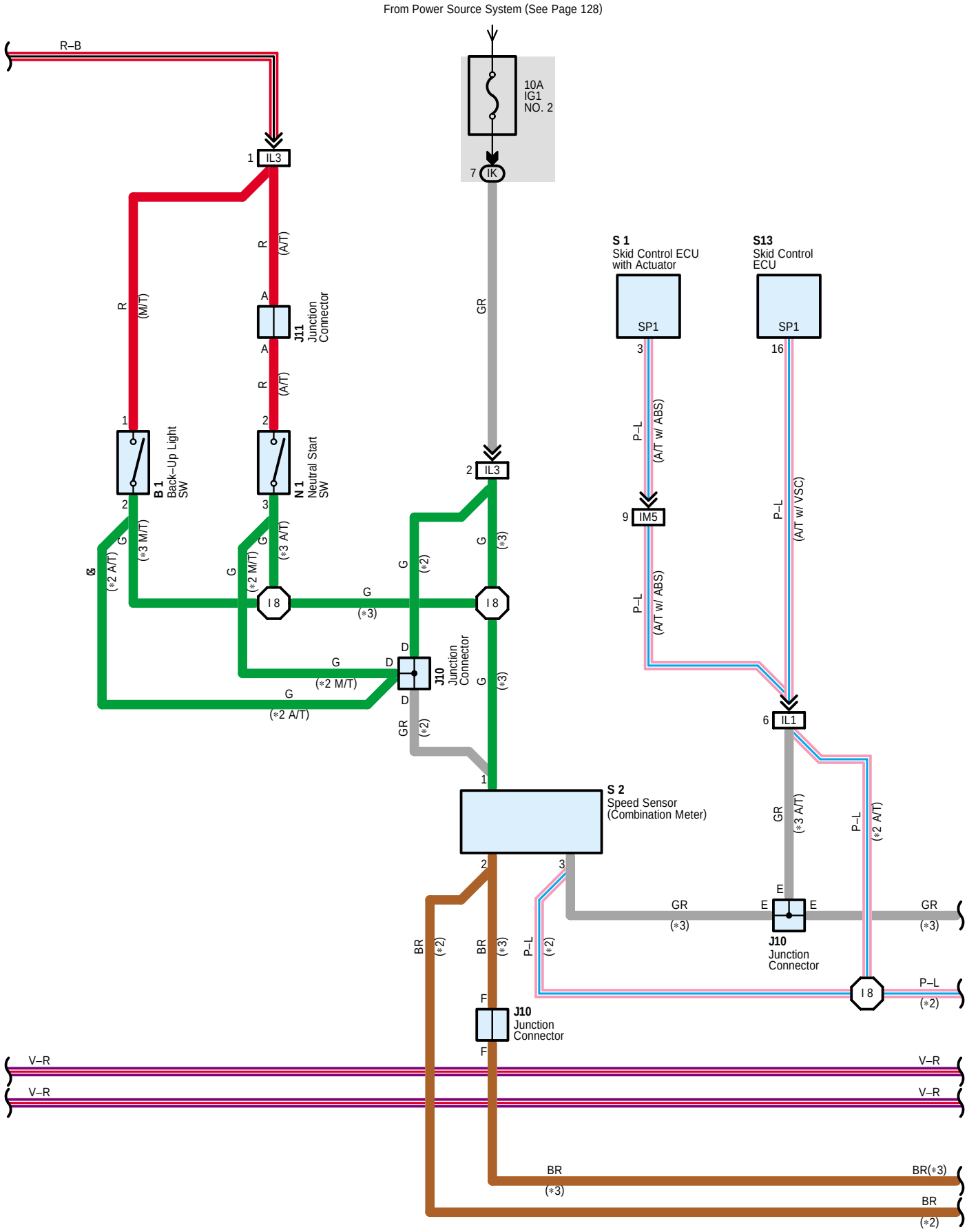
From Power Source System (See Page 128)
R–B
10A
IG1
NO. 2
IL3
IK
R
(M/T)
R
(A/T)
A
J11
Junction
Connector
B 1
Back–Up Light
SW
N 1
Neutral Start
SW
GR
S 1
Skid Control ECU
with Actuator
SP1
S13
Skid Control
ECU
SP1
P–L
(A/T w/ ABS)
IM5
P–L
(A/T w/ VSC)
G
(*3 M/T)
(*3 A/T)
(*2 A/T)
(*2 M/T)
(*2)
(*3)
I 8
J10
Junction
Connector
IL1
S 2
Speed Sensor
(Combination Meter)
BR
(*2)
(*3)
V–R
BR(*3)

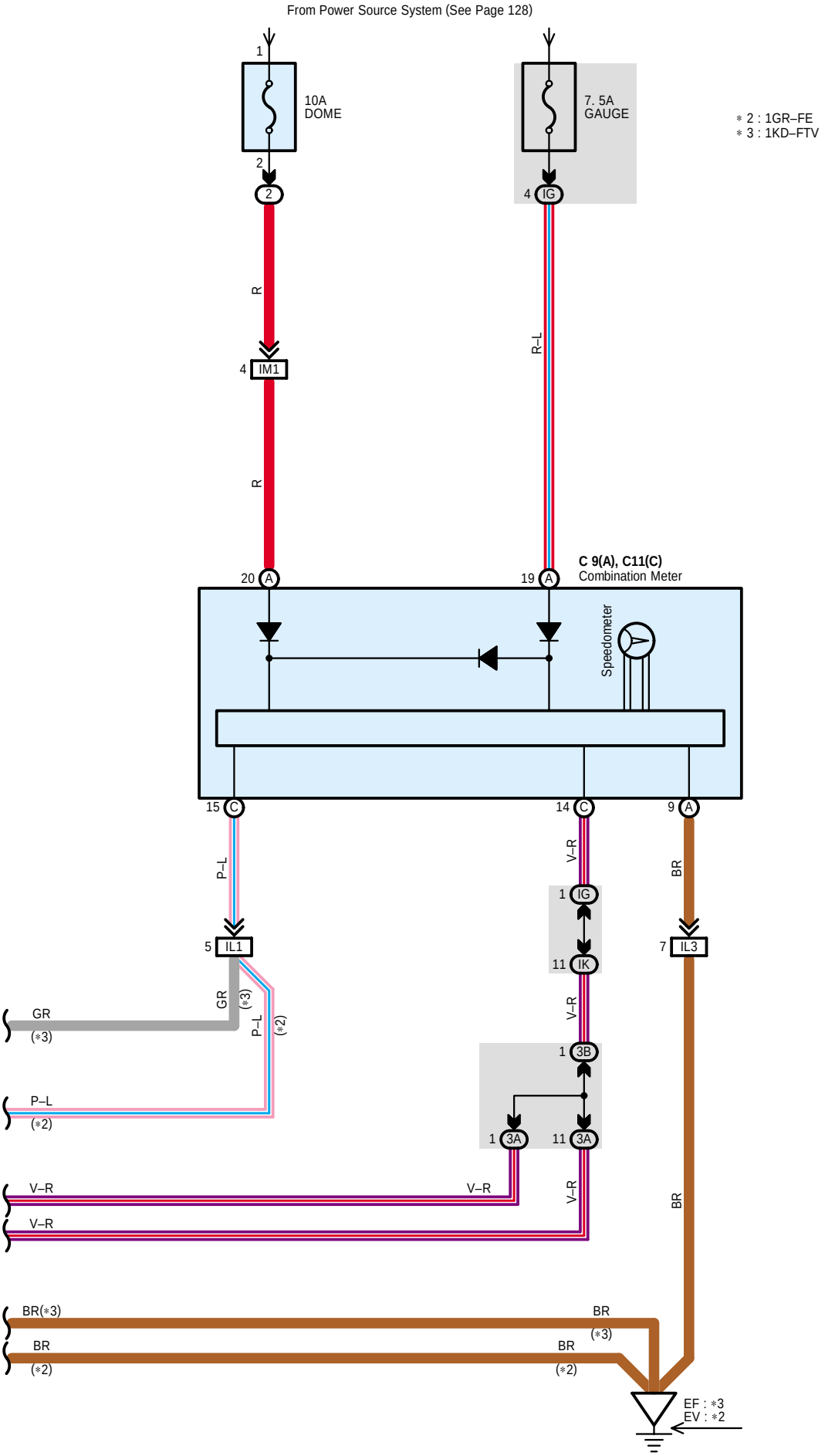
From Power Source System (See Page 128)
1
10A
DOME
2
2
R
4 IM1
R
7. 5A
GAUGE
4 IG
R–L
∗ 2 : 1GR–FE
∗ 3 : 1KD–FTV
C 9(A), C11(C)
Combination Meter
20 A
19 A
Speedometer
15 C
14 C
9 A
P–L
V–R
BR
1 IG
5 IL1
11 IK
7 IL3
GR
(∗3)
P–L
(∗2)
V–R
1 3B
1 3A
11 3A
V–R
V–R
V–R
BR
BR(∗3)
BR
(∗3)
BR
(∗2)
BR
(∗2)
EF : ∗3
EV : ∗2

Navigation System (LHD)

System Outline

The navigation system displays the operating status and instructions for the radio and player. Additionally, the navigation system precisely measures the current vehicle position, displays the map obtained from the map database on the screen, and informs the route to the destination shown on the map using voice guidance.

Service Hints

N4 (B) Navigation ECU

(B) 18–Ground : Approx. 12 volts with ignition SW at ON or ACC position
(B) 9–Ground : Always approx. 12 volts
(B) 17–Ground : Always continuity

: Parts Location

Code		See Page	Code		See Page	Code		See Page
A21	A	48 (LHD)	J15		50 (LHD)	P4		51 (LHD)
B1		38 (*1)	J16		50 (LHD)	R5	C	51 (LHD)
		42 (*3)	J20		50 (LHD)	S1		39 (*1)
C9	A	49 (LHD)	J21		50 (LHD)			43 (*3)
C11	C	49 (LHD)	M4	A	50 (LHD)	S2		39 (*1)
D6		49 (LHD)	M5	B	50 (LHD)			43 (*3)
F14		52 (*6)	M6	C	50 (LHD)	S13		51 (LHD)
		54 (*7)	N1		39 (*1)	S16	A	51 (LHD)
G2		49 (LHD)			43 (*3)	S17	B	51 (LHD)
J10		50 (LHD)	N3	A	50 (LHD)			
J11		50 (LHD)	N4	B	50 (LHD)			

: Relay Blocks

Code	See Page	Relay Blocks (Relay Block Location)
2	23	Engine Room R/B (Engine Compartment Left)

: Junction Block and Wire Harness Connector

Code	See Page	Junction Block and Wire Harness (Connector Location)
IB	26 (LHD)	Engine Room Main Wire and Driver Side J/B (Lower Finish Panel)
IG	27 (LHD)	Instrument Panel Wire and Driver Side J/B (Lower Finish Panel)
IJ		
IK		
IL		
1B	32 (LHD)	Instrument Panel Wire and J/B No.1 (Instrument Panel Reinforcement Left)
1D		
1E		
2A	34	Instrument Panel Wire and J/B No.2 (Instrument Panel Reinforcement Center)
2D		
3A	36 (LHD)	Instrument Panel Wire and J/B No.3 (Instrument Panel Reinforcement Right)
3B		

* 1 : LHD 1GR–FE * 2 : LHD 3RZ–FE * 3 : LHD 1KD–FTV * 4 : LHD 1KZ–TE * 5 : LHD 5L–E * 6 : LHD 5–Door * 7 : LHD 3–Door
* 8 : LHD 8Way Power Seat * 9 : LHD Except 8Way Power Seat * 10 : RHD 1GR–FE * 11 : RHD 3RZ–FE * 12 : RHD 1KD–FTV
* 13 : RHD 1KZ–TE * 14 : RHD 5L–E * 15 : RHD 5–Door * 16 : RHD 3–Door * 17 : RHD 8Way Power Seat
* 18 : RHD Except 8Way Power Seat

: Connector Joining Wire Harness and Wire Harness

Code	See Page	Joining Wire Harness and Wire Harness (Connector Location)
IA1	88 (LHD)	Front Door LH Wire and Instrument Panel Wire (Left Kick Panel)
IC4	88 (LHD)	Instrument Panel Wire and Engine Room Main Wire (Left Kick Panel)
IF1	90 (LHD)	Instrument Panel Wire and Instrument Panel Wire (Near the J/B No.1)
IH1	90 (LHD)	Instrument Panel Wire and Instrument Panel No.2 Wire (Instrument Panel Brace LH)
IL1	92 (LHD)	Engine Wire and Instrument Panel Wire (Right Side of the Blower Unit)
IL3		
IM1	92 (LHD)	Instrument Panel Wire and Engine Room Main Wire (Right Kick Panel)
IM5		

: Ground Points

Code	See Page	Ground Points Location
EF	82 (*3)	Rear Part of Cylinder Block
EV	78 (*1)	Rear Side of Left Bank Cylinder Block
IL	88 (LHD)	Near the Right Side of Steering Column
IM	88 (LHD)	Instrument Panel Brace LH

: Splice Points

Code	See Page	Wire Harness with Splice Points	Code	See Page	Wire Harness with Splice Points
I7	90 (LHD)	Instrument Panel Wire	I8	90 (LHD)	Engine Wire

* 1 : LHD 1GR-FE * 2 : LHD 3RZ-FE * 3 : LHD 1KD-FTV * 4 : LHD 1KZ-TE * 5 : LHD 5L-E * 6 : LHD 5-Door * 7 : LHD 3-Door
* 8 : LHD 8Way Power Seat * 9 : LHD Except 8Way Power Seat * 10 : RHD 1GR-FE * 11 : RHD 3RZ-FE * 12 : RHD 1KD-FTV
* 13 : RHD 1KZ-TE * 14 : RHD 5L-E * 15 : RHD 5-Door * 16 : RHD 3-Door * 17 : RHD 8Way Power Seat
* 18 : RHD Except 8Way Power Seat

Navigation System (RHD)

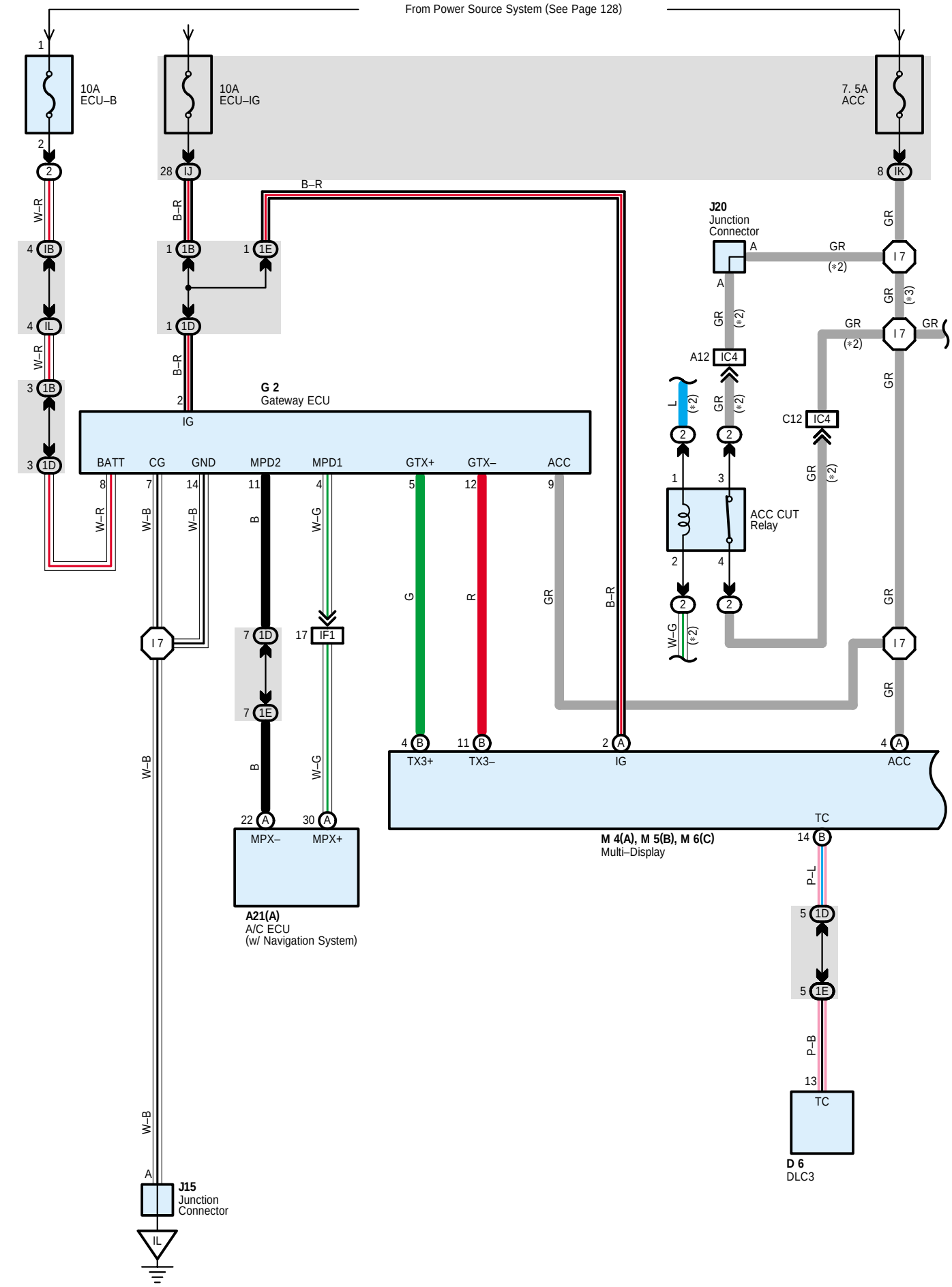

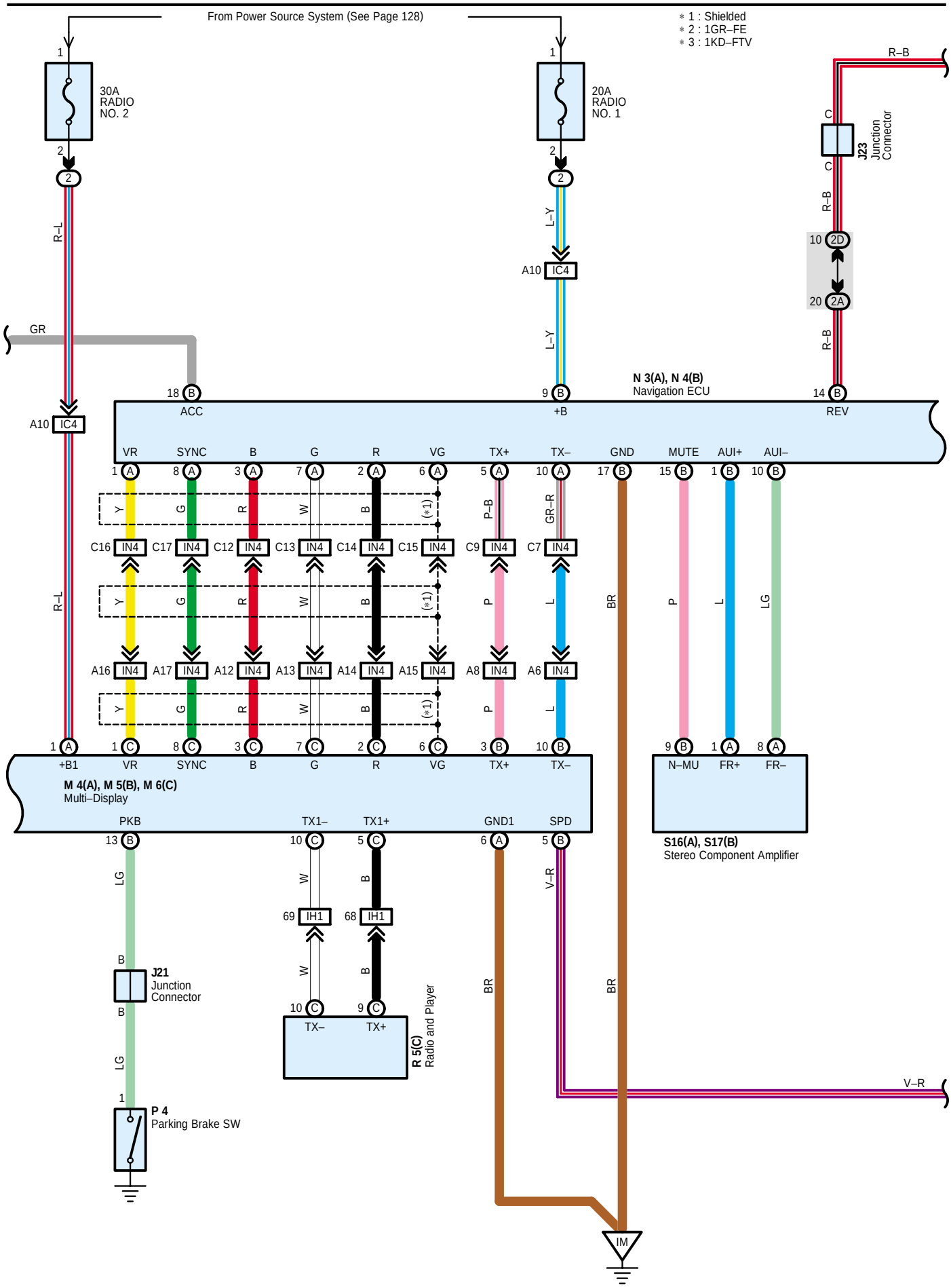
From Power Source System (See Page 128)
* 1 : Shielded
* 2 : 1GR–FE
* 3 : 1KD–FTV
30A RADIO NO. 2
20A RADIO NO. 1
R–B
J23 Junction Connector
R–L
L–Y
GR
A10 IC4
N 3(A), N 4(B)
Navigation ECU
ACC
+B
REV
VR SYNC B G R VG TX+ TX– GND MUTE AUI+ AUI–
M 4(A), M 5(B), M 6(C)
Multi–Display
+B1 VR SYNC B G R VG TX+ TX–
N–MU FR+ FR–
S16(A), S17(B)
Stereo Component Amplifier
PKB TX1– TX1+ GND1 SPD
J21 Junction Connector
R 5(C)
Radio and Player
TX– TX+
P 4
Parking Brake SW
V–R
BR
IM

Navigation System (RHD)

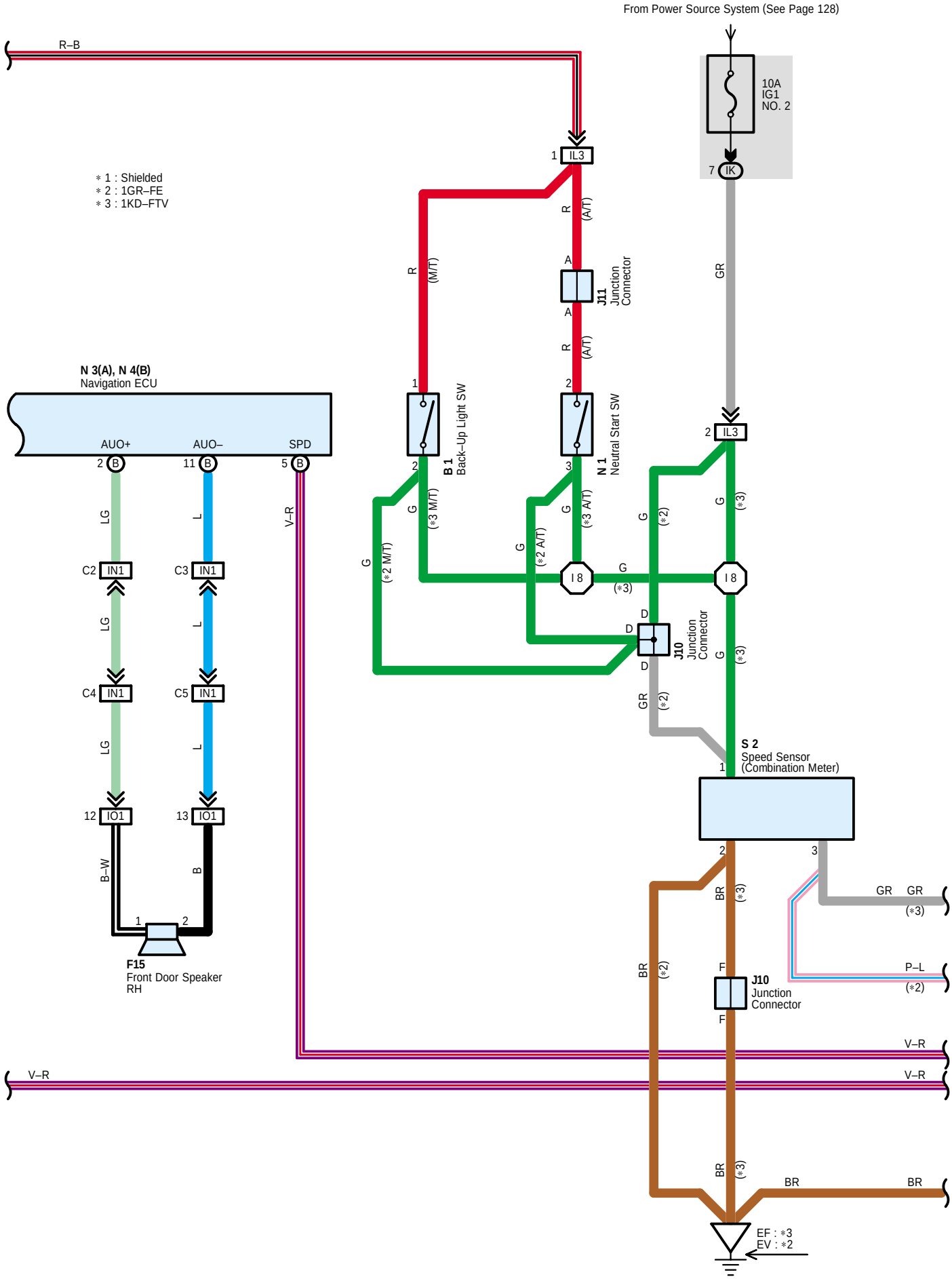

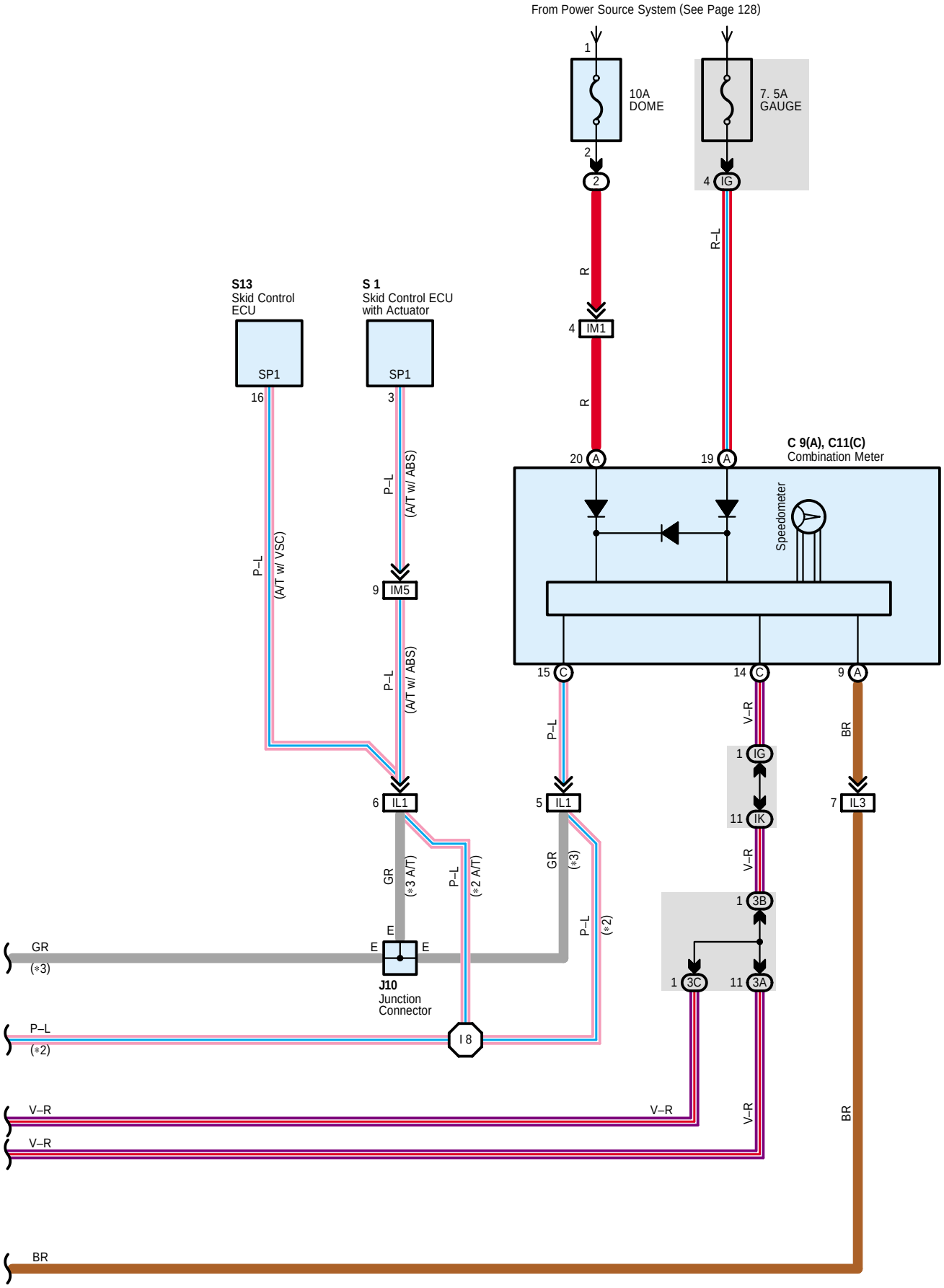
From Power Source System (See Page 128)
1
10A
DOME
2
2
7. 5A
GAUGE
4 IG
R
R–L
R
4 IM1
S13
Skid Control
ECU
SP1
16
S 1
Skid Control ECU
with Actuator
SP1
3
C 9(A), C11(C)
Combination Meter
20 A
19 A
Speedometer
P–L
(A/T w/ VSC)
P–L
(A/T w/ ABS)
9 IM5
P–L
(A/T w/ ABS)
15 C
14 C
9 A
P–L
V–R
BR
1 IG
6 IL1
5 IL1
7 IL3
11 IK
GR
(*3 A/T)
P–L
(*2 A/T)
GR
(*3)
V–R
1 3B
E
E
E
P–L
(*2)
GR
(*3)
J10
Junction
Connector
1 3C
11 3A
P–L
(*2)
I 8
V–R
V–R
V–R
V–R
BR
BR

Navigation System (RHD)

System Outline

The navigation system displays the operating status and instructions for the radio and player. Additionally, the navigation system precisely measures the current vehicle position, displays the map obtained from the map database on the screen, and informs the route to the destination shown on the map using voice guidance.

Service Hints

N4 (B) Navigation ECU

(B) 18–Ground : Approx. 12 volts with ignition SW at ON or ACC position
(B) 9–Ground : Always approx. 12 volts
(B) 17–Ground : Always continuity

: Parts Location

Code		See Page	Code		See Page	Code		See Page
A21	A	68 (RHD)	J15		70 (RHD)	P4		71 (RHD)
B1		58 (*10)	J20		70 (RHD)	R5	C	71 (RHD)
		62 (*12)	J21		70 (RHD)	S1		59 (*10)
C9	A	69 (RHD)	J23		70 (RHD)			63 (*12)
C11	C	69 (RHD)	M4	A	70 (RHD)	S2		59 (*10)
D6		69 (RHD)	M5	B	70 (RHD)			63 (*12)
F15		72 (*15)	M6	C	70 (RHD)	S13		71 (RHD)
		74 (*16)	N1		59 (*10)	S16	A	71 (RHD)
G2		69 (RHD)			63 (*12)	S17	B	71 (RHD)
J10		70 (RHD)	N3	A	70 (RHD)			
J11		70 (RHD)	N4	B	70 (RHD)			

: Relay Blocks

Code	See Page	Relay Blocks (Relay Block Location)
2	23	Engine Room R/B (Engine Compartment Left)

: Junction Block and Wire Harness Connector

Code	See Page	Junction Block and Wire Harness (Connector Location)
IB	28 (RHD)	Engine Room Main Wire and Driver Side J/B (Lower Finish Panel)
IG	29 (RHD)	Instrument Panel Wire and Driver Side J/B (Lower Finish Panel)
IJ		
IK		
IL		
1B	32 (RHD)	Instrument Panel Wire and J/B No.1 (Instrument Panel Reinforcement Right)
1D		
1E		
2A	34	Instrument Panel Wire and J/B No.2 (Instrument Panel Reinforcement Center)
2D		
3A	36 (RHD)	Instrument Panel Wire and J/B No.3 (Instrument Panel Reinforcement Left)
3B		
3C		

* 1 : LHD 1GR–FE * 2 : LHD 3RZ–FE * 3 : LHD 1KD–FTV * 4 : LHD 1KZ–TE * 5 : LHD 5L–E * 6 : LHD 5–Door * 7 : LHD 3–Door
* 8 : LHD 8Way Power Seat * 9 : LHD Except 8Way Power Seat * 10 : RHD 1GR–FE * 11 : RHD 3RZ–FE * 12 : RHD 1KD–FTV
* 13 : RHD 1KZ–TE * 14 : RHD 5L–E * 15 : RHD 5–Door * 16 : RHD 3–Door * 17 : RHD 8Way Power Seat
* 18 : RHD Except 8Way Power Seat

: Connector Joining Wire Harness and Wire Harness

Code	See Page	Joining Wire Harness and Wire Harness (Connector Location)
IC4	112 (RHD)	Instrument Panel Wire and Engine Room Main Wire (Left Kick Panel)
IF1	114 (RHD)	Instrument Panel Wire and Instrument Panel Wire (Near the J/B No.1)
IH1	114 (RHD)	Instrument Panel Wire and Instrument Panel No.2 Wire (Instrument Panel Brace LH)
IL1	116 (RHD)	Engine Wire and Instrument Panel Wire (Left Side of the Blower Unit)
IL3		
IM1	116 (RHD)	Instrument Panel Wire and Engine Room Main Wire (Right Kick Panel)
IM5		
IN1	118 (RHD)	Instrument Panel Wire and Floor Wire (Right Kick Panel)
IN4		
IO1	118 (RHD)	Front Door RH Wire and Instrument Panel Wire (Right Kick Panel)

: Ground Points

Code	See Page	Ground Points Location
EF	106 (*12)	Rear Part of Cylinder Block
EV	102 (*10)	Rear Side of Left Bank Cylinder Block
IL	112 (RHD)	Instrument Panel Brace RH
IM		

: Splice Points

Code	See Page	Wire Harness with Splice Points	Code	See Page	Wire Harness with Splice Points
I7	114 (RHD)	Instrument Panel Wire	I8	114 (RHD)	Engine Wire

* 1 : LHD 1GR-FE * 2 : LHD 3RZ-FE * 3 : LHD 1KD-FTV * 4 : LHD 1KZ-TE * 5 : LHD 5L-E * 6 : LHD 5-Door * 7 : LHD 3-Door
* 8 : LHD 8Way Power Seat * 9 : LHD Except 8Way Power Seat * 10 : RHD 1GR-FE * 11 : RHD 3RZ-FE * 12 : RHD 1KD-FTV
* 13 : RHD 1KZ-TE * 14 : RHD 5L-E * 15 : RHD 5-Door * 16 : RHD 3-Door * 17 : RHD 8Way Power Seat
* 18 : RHD Except 8Way Power Seat

Radio and Player (Separate Type Amplifier)

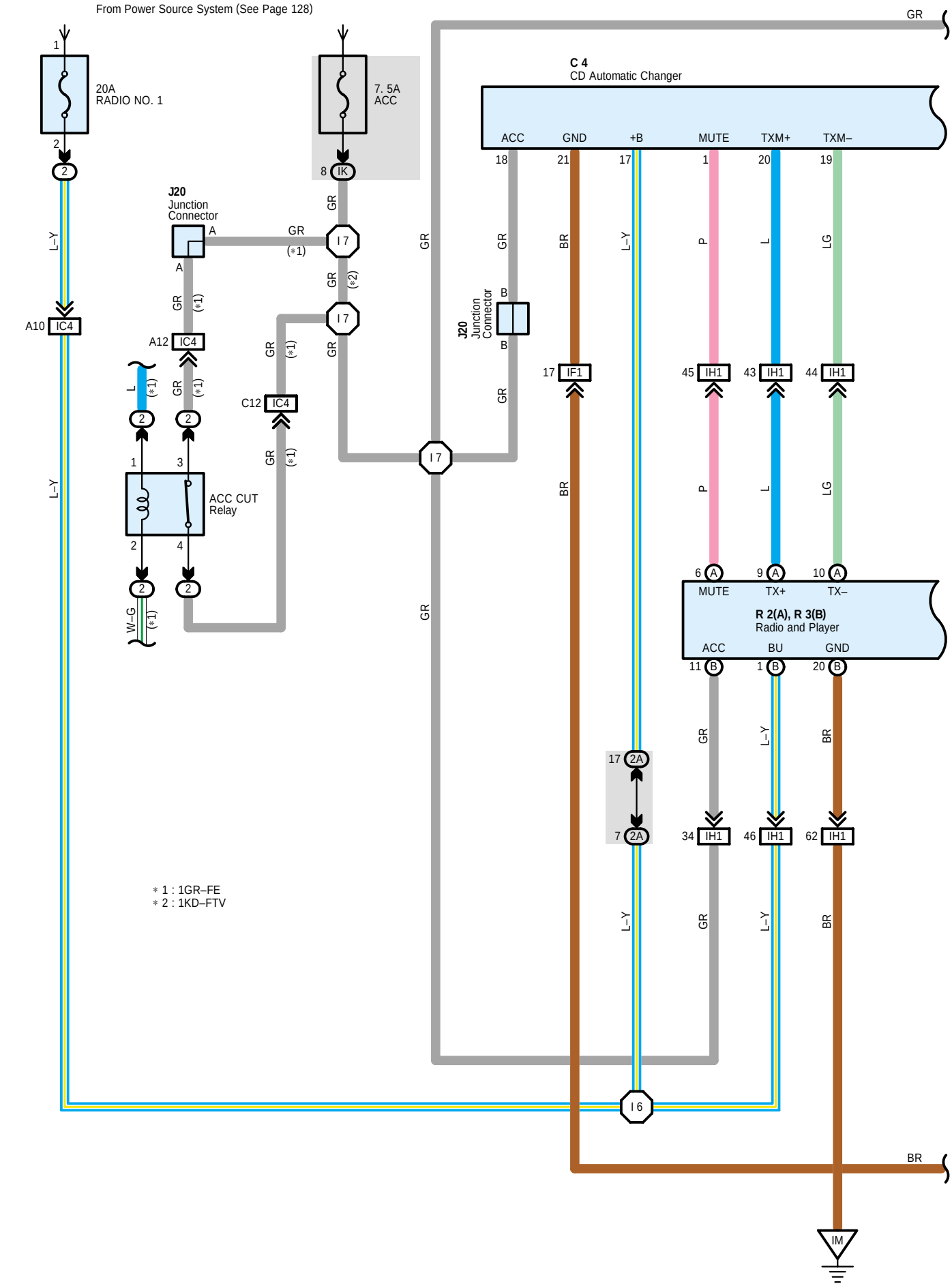

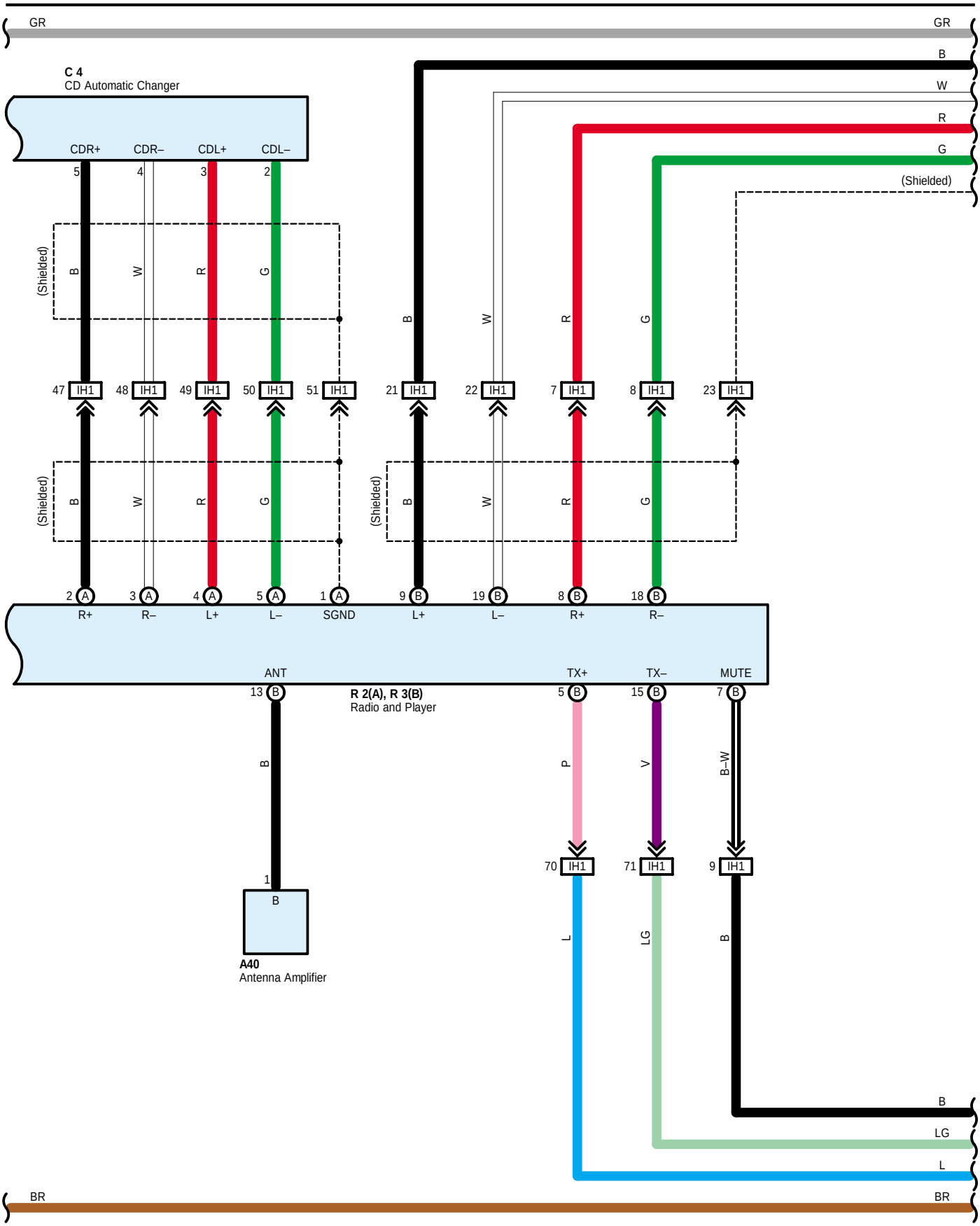
GR
GR
B
W
R
G
(Shielded)
C 4
CD Automatic Changer
CDR+
CDR–
CDL+
CDL–
5
4
3
2
(Shielded)
B
W
R
G
47 IH1
48 IH1
49 IH1
50 IH1
51 IH1
21 IH1
22 IH1
7 IH1
8 IH1
23 IH1
(Shielded)
2 A
3 A
4 A
5 A
1 A
9 B
19 B
8 B
18 B
R+
R–
L+
L–
SGND
L+
L–
R+
R–
ANT
13 B
R 2(A), R 3(B)
Radio and Player
TX+
TX–
MUTE
5 B
15 B
7 B
P
V
B–W
70 IH1
71 IH1
9 IH1
1
B
A40
Antenna Amplifier
L
LG
B
B
LG
L
BR
BR

Radio and Player (Separate Type Amplifier)

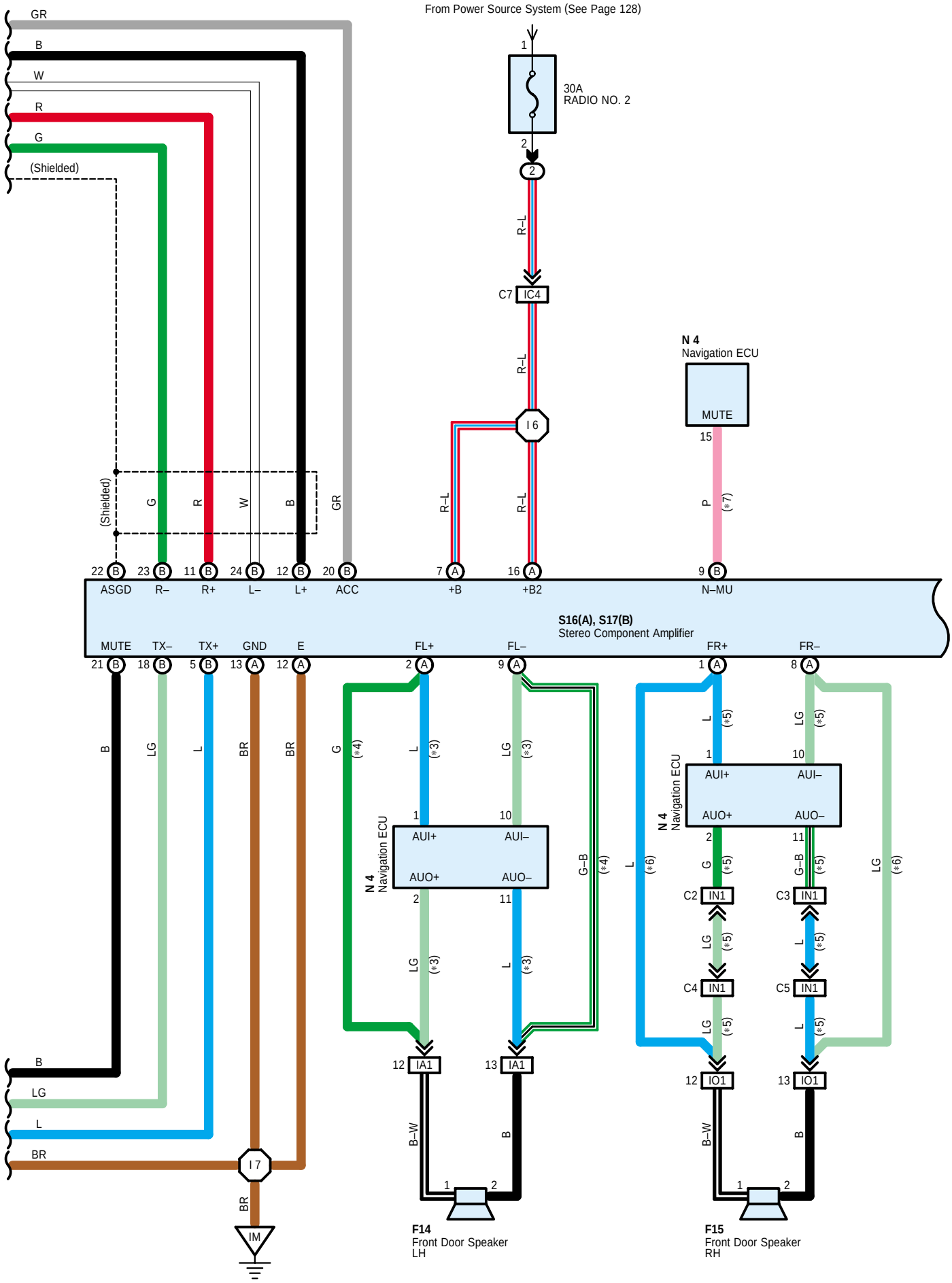

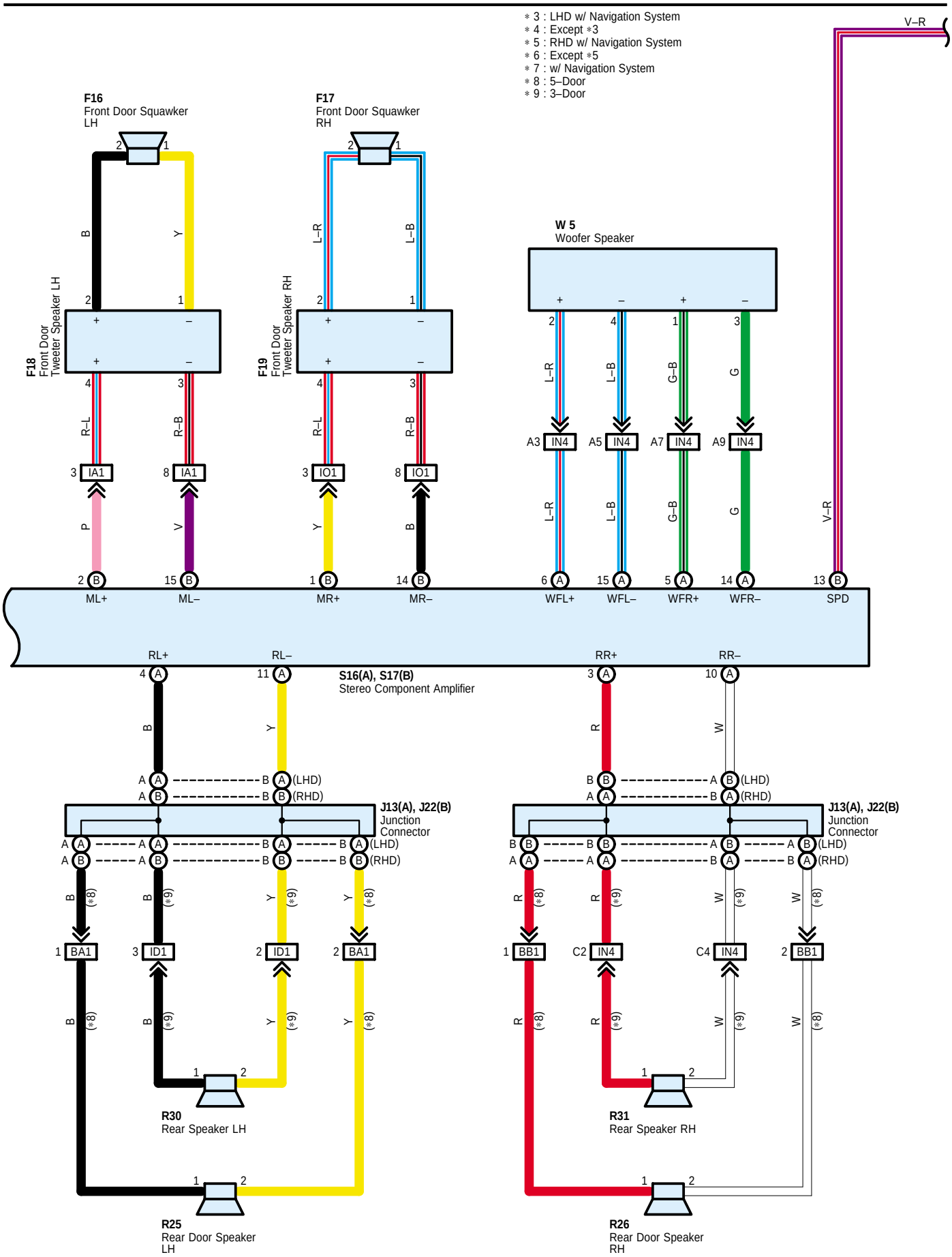
∗ 3 : LHD w/ Navigation System
∗ 4 : Except ∗3
∗ 5 : RHD w/ Navigation System
∗ 6 : Except ∗5
∗ 7 : w/ Navigation System
∗ 8 : 5–Door
∗ 9 : 3–Door
F16
Front Door Squawker LH
F17
Front Door Squawker RH
F18
Front Door Tweeter Speaker LH
F19
Front Door Tweeter Speaker RH
W 5
Woofer Speaker
IA1
IO1
IN4
ML+
ML–
MR+
MR–
WFL+
WFL–
WFR+
WFR–
SPD
V–R
RL+
RL–
RR+
RR–
S16(A), S17(B)
Stereo Component Amplifier
J13(A), J22(B)
Junction Connector
(LHD)
(RHD)
BA1
ID1
BB1
R30
Rear Speaker LH
R31
Rear Speaker RH
R25
Rear Door Speaker LH
R26
Rear Door Speaker RH

Radio and Player (Separate Type Amplifier)

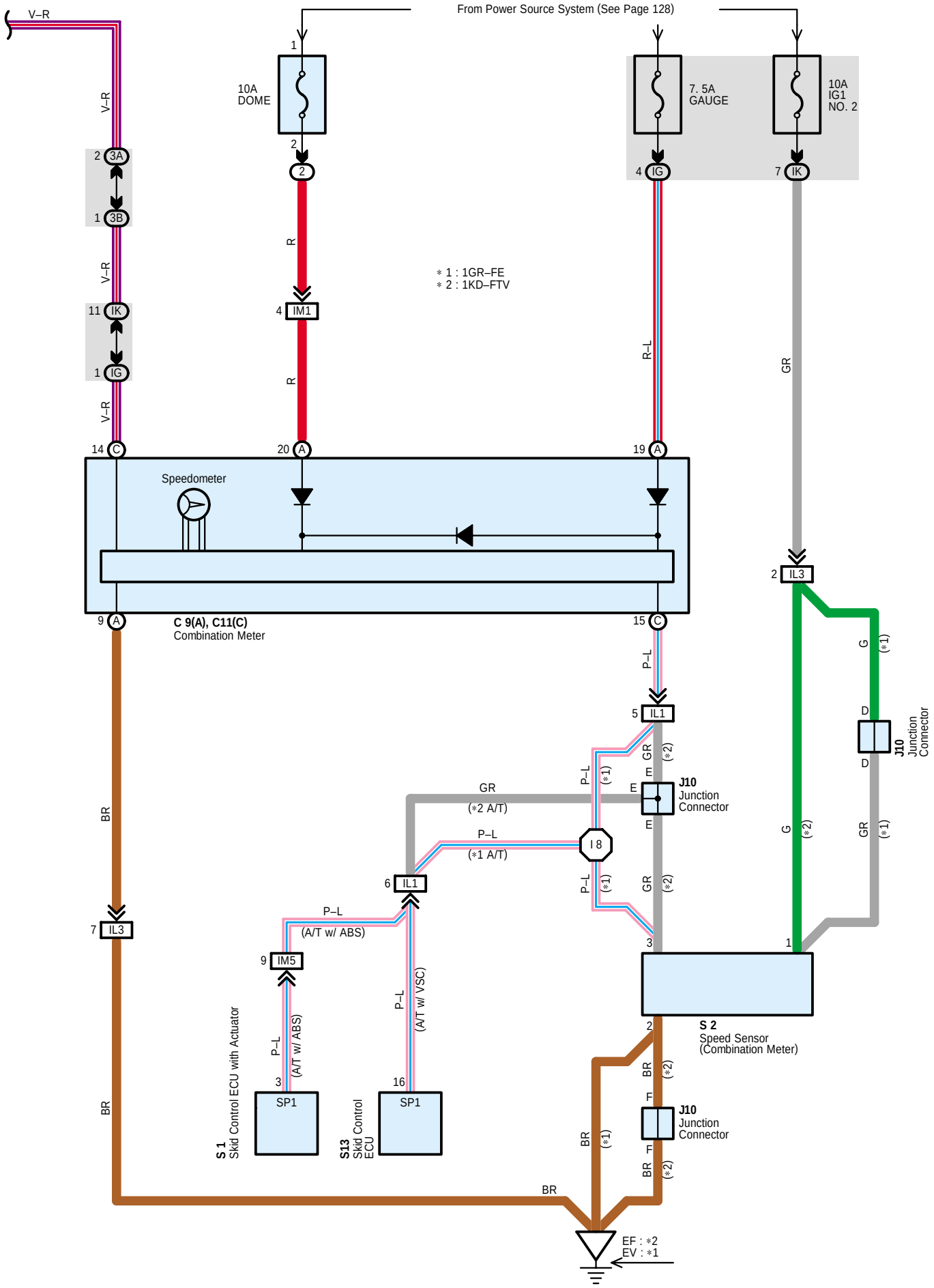

Service Hints

R3 (B) Radio and Player

(B) 11–Ground : Approx. 12 volts with ignition SW at ACC or ON position
(B) 1–Ground : Always approx. 12 volts
(B) 20–Ground : Always continuity

S16 (A), S17 (B) Stereo Component Amplifier

(B) 20–Ground : Approx. 12 volts with ignition SW at ACC or ON position
(A) 7, (A) 16–Ground : Always approx. 12 volts
(A) 12, (A) 13–Ground : Always continuity

○ : Parts Location

Code	See Page	Code	See Page	Code	See Page
A40	48 (LHD)	F18	52 (*6)	R26	53 (*6)
	68 (RHD)		54 (*7)		73 (*15)
C4	49 (LHD)		72 (*15)	R30	55 (*7)
	69 (RHD)		74 (*16)		75 (*16)
C9 A	49 (LHD)	F19	52 (*6)	R31	55 (*7)
	69 (RHD)		54 (*7)		75 (*16)
C11 C	49 (LHD)		72 (*15)	S1	39 (*1)
	69 (RHD)		74 (*16)		43 (*3)
F14	52 (*6)	J10	50 (LHD)		59 (*10)
	54 (*7)		70 (RHD)		63 (*12)
	72 (*15)	J13 A	50 (LHD)	S2	39 (*1)
	74 (*16)		70 (RHD)		43 (*3)
F15	52 (*6)	J20	50 (LHD)		59 (*10)
	54 (*7)		70 (RHD)		63 (*12)
	72 (*15)	J22 B	50 (LHD)	S13	51 (LHD)
	74 (*16)		70 (RHD)		71 (RHD)
F16	52 (*6)	N4	50 (LHD)	S16 A	51 (LHD)
	54 (*7)		70 (RHD)		71 (RHD)
	72 (*15)	R2 A	51 (LHD)	S17 B	51 (LHD)
	74 (*16)		71 (RHD)		71 (RHD)
F17	52 (*6)	R3 B	51 (LHD)	W5	53 (*6)
	54 (*7)		71 (RHD)		55 (*7)
	72 (*15)	R25	53 (*6)		73 (*15)
	74 (*16)		73 (*15)		75 (*16)

▭ : Relay Blocks

Code	See Page	Relay Blocks (Relay Block Location)
2	23	Engine Room R/B (Engine Compartment Left)

* 1 : LHD 1GR–FE * 2 : LHD 3RZ–FE * 3 : LHD 1KD–FTV * 4 : LHD 1KZ–TE * 5 : LHD 5L–E * 6 : LHD 5–Door * 7 : LHD 3–Door
* 8 : LHD 8Way Power Seat * 9 : LHD Except 8Way Power Seat * 10 : RHD 1GR–FE * 11 : RHD 3RZ–FE * 12 : RHD 1KD–FTV
* 13 : RHD 1KZ–TE * 14 : RHD 5L–E * 15 : RHD 5–Door * 16 : RHD 3–Door * 17 : RHD 8Way Power Seat
* 18 : RHD Except 8Way Power Seat

: Junction Block and Wire Harness Connector

Code	See Page	Junction Block and Wire Harness (Connector Location)
IG	27 (LHD)	Instrument Panel Wire and Driver Side J/B (Lower Finish Panel)
	29 (RHD)	
IK	27 (LHD)	
	29 (RHD)	
2A	34	Instrument Panel Wire and J/B No.2 (Instrument Panel Reinforcement Center)
3A	36 (LHD)	Instrument Panel Wire and J/B No.3 (Instrument Panel Reinforcement Right)
	36 (RHD)	Instrument Panel Wire and J/B No.3 (Instrument Panel Reinforcement Left)
3B	36 (LHD)	Instrument Panel Wire and J/B No.3 (Instrument Panel Reinforcement Right)
	36 (RHD)	Instrument Panel Wire and J/B No.3 (Instrument Panel Reinforcement Left)

: Connector Joining Wire Harness and Wire Harness

Code	See Page	Joining Wire Harness and Wire Harness (Connector Location)
IA1	88 (LHD)	Front Door LH Wire and Instrument Panel Wire (Left Kick Panel)
	112 (RHD)	
IC4	88 (LHD)	Instrument Panel Wire and Engine Room Main Wire (Left Kick Panel)
	112 (RHD)	
ID1	90 (LHD)	Instrument Panel Wire and Floor No.2 Wire (Left Kick Panel)
	114 (RHD)	
IF1	90 (LHD)	Instrument Panel Wire and Instrument Panel Wire (Near the J/B No.1)
	114 (RHD)	
IH1	90 (LHD)	Instrument Panel Wire and Instrument Panel No.2 Wire (Instrument Panel Brace LH)
	114 (RHD)	
IL1	92 (LHD)	Engine Wire and Instrument Panel Wire (Right Side of the Blower Unit)
	116 (RHD)	Engine Wire and Instrument Panel Wire (Left Side of the Blower Unit)
IL3	92 (LHD)	Engine Wire and Instrument Panel Wire (Right Side of the Blower Unit)
	116 (RHD)	Engine Wire and Instrument Panel Wire (Left Side of the Blower Unit)
IM1	92 (LHD)	Instrument Panel Wire and Engine Room Main Wire (Right Kick Panel)
	116 (RHD)	
IM5	92 (LHD)	
	116 (RHD)	
IN1	118 (RHD)	Instrument Panel Wire and Floor Wire (Right Kick Panel)
IN4	94 (LHD)	
	118 (RHD)	
IO1	94 (LHD)	Front Door RH Wire and Instrument Panel Wire (Right Kick Panel)
	118 (RHD)	
BA1	96 (*6)	Rear Door LH Wire and Instrument Panel Wire (Center Pillar LH)
	120 (*15)	
BB1	96 (*6)	Rear Door RH Wire and Instrument Panel Wire (Center Pillar RH)
	120 (*15)	

: Ground Points

Code	See Page	Ground Points Location
EF	82 (*3)	Rear Part of Cylinder Block
	106 (*12)	
EV	78 (*1)	Rear Side of Left Bank Cylinder Block
	102 (*10)	
IM	88 (LHD)	Instrument Panel Brace LH
	112 (RHD)	Instrument Panel Brace RH

* 1 : LHD 1GR-FE * 2 : LHD 3RZ-FE * 3 : LHD 1KD-FTV * 4 : LHD 1KZ-TE * 5 : LHD 5L-E * 6 : LHD 5-Door * 7 : LHD 3-Door
* 8 : LHD 8Way Power Seat * 9 : LHD Except 8Way Power Seat * 10 : RHD 1GR-FE * 11 : RHD 3RZ-FE * 12 : RHD 1KD-FTV
* 13 : RHD 1KZ-TE * 14 : RHD 5L-E * 15 : RHD 5-Door * 16 : RHD 3-Door * 17 : RHD 8Way Power Seat
* 18 : RHD Except 8Way Power Seat

: **Splice Points**

Code	See Page	Wire Harness with Splice Points	Code	See Page	Wire Harness with Splice Points
I6	90 (LHD)	Instrument Panel Wire	I7	114 (RHD)	Instrument Panel Wire
	114 (RHD)		I8	90 (LHD)	Engine Wire
I7	90 (LHD)			114 (RHD)	

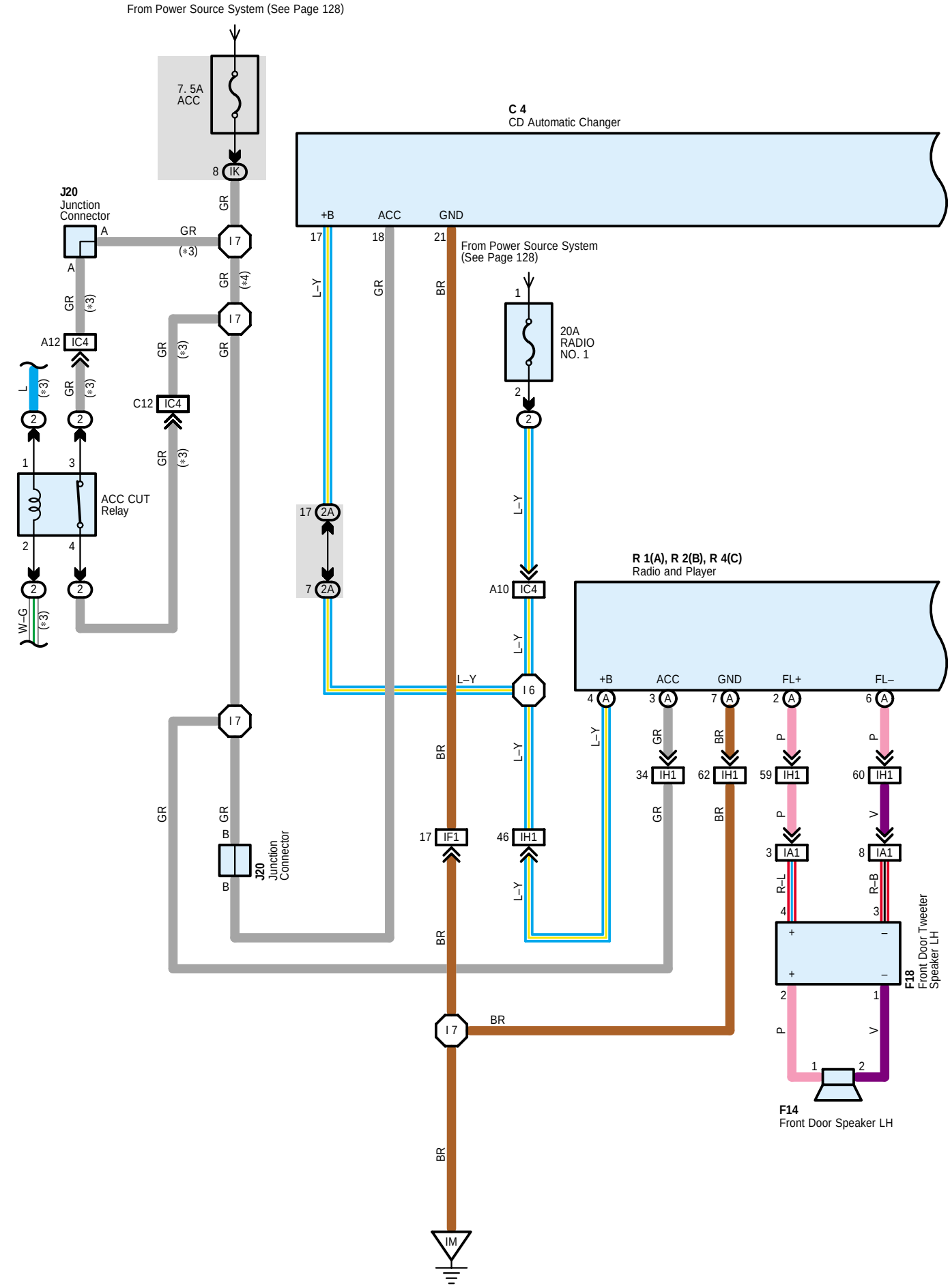
From Power Source System (See Page 128)
7. 5A
ACC
8 IK
C 4
CD Automatic Changer
+B
ACC
GND
17
18
21
J20
Junction
Connector
A
GR
(*3)
I 7
(*4)
A12 IC4
C12 IC4
L
W–G
ACC CUT
Relay
1
3
2
4
17 2A
7 2A
L–Y
BR
From Power Source System
(See Page 128)
20A
RADIO
NO. 1
A10 IC4
I 6
R 1(A), R 2(B), R 4(C)
Radio and Player
FL+
FL–
34 IH1
62 IH1
59 IH1
60 IH1
17 IF1
46 IH1
3 IA1
8 IA1
R–L
R–B
P
V
F18
Front Door Tweeter
Speaker LH
F14
Front Door Speaker LH
IM

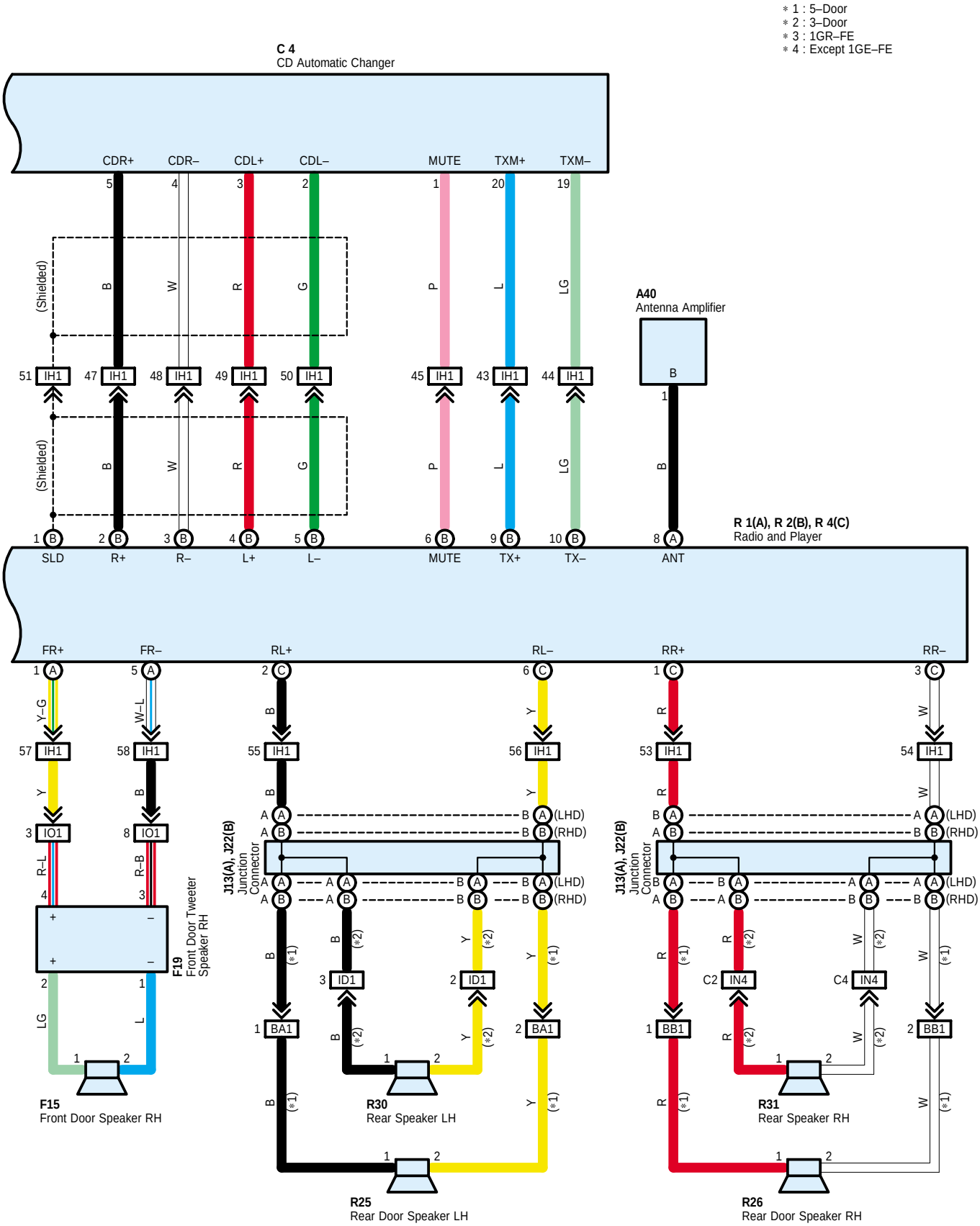
∗ 1 : 5–Door
∗ 2 : 3–Door
∗ 3 : 1GR–FE
∗ 4 : Except 1GE–FE
C 4
CD Automatic Changer
CDR+
CDR–
CDL+
CDL–
MUTE
TXM+
TXM–
(Shielded)
A40
Antenna Amplifier
R 1(A), R 2(B), R 4(C)
Radio and Player
SLD
R+
R–
L+
L–
MUTE
TX+
TX–
ANT
FR+
FR–
RL+
RL–
RR+
RR–
J13(A), J22(B)
Junction Connector
(LHD)
(RHD)
F19
Front Door Tweeter Speaker RH
F15
Front Door Speaker RH
R30
Rear Speaker LH
R31
Rear Speaker RH
R25
Rear Door Speaker LH
R26
Rear Door Speaker RH

Service Hints

R1 (A) Radio and Player
(A) 3-Ground : Approx. 12 volts with ignition SW at ACC or ON position
(A) 4-Ground : Always approx. 12 volts
(A) 7-Ground : Always continuity

: Parts Location

Code	See Page	Code	See Page	Code	See Page
A40	48 (LHD)	F18	72 (*15)	R2 B	51 (LHD)
	68 (RHD)		74 (*16)		71 (RHD)
C4	49 (LHD)	F19	52 (*6)	R4 C	51 (LHD)
	69 (RHD)		54 (*7)		71 (RHD)
F14	52 (*6)		72 (*15)	R25	53 (*6)
	54 (*7)		74 (*16)		73 (*15)
	72 (*15)	J13 A	50 (LHD)	R26	53 (*6)
	74 (*16)		70 (RHD)		73 (*15)
F15	52 (*6)	J20	50 (LHD)	R30	55 (*7)
	54 (*7)		70 (RHD)		75 (*16)
	72 (*15)	J22 B	50 (LHD)	R31	55 (*7)
	74 (*16)		70 (RHD)		75 (*16)
F18	52 (*6)	R1 A	51 (LHD)		
	54 (*7)		71 (RHD)		

: Relay Blocks

Code	See Page	Relay Blocks (Relay Block Location)
2	23	Engine Room R/B (Engine Compartment Left)

: Junction Block and Wire Harness Connector

Code	See Page	Junction Block and Wire Harness (Connector Location)
IK	27 (LHD)	Instrument Panel Wire and Driver Side J/B (Lower Finish Panel)
	29 (RHD)	
2A	34	Instrument Panel Wire and J/B No.2 (Instrument Panel Reinforcement Center)

* 1 : LHD 1GR-FE * 2 : LHD 3RZ-FE * 3 : LHD 1KD-FTV * 4 : LHD 1KZ-TE * 5 : LHD 5L-E * 6 : LHD 5-Door * 7 : LHD 3-Door
* 8 : LHD 8Way Power Seat * 9 : LHD Except 8Way Power Seat * 10 : RHD 1GR-FE * 11 : RHD 3RZ-FE * 12 : RHD 1KD-FTV
* 13 : RHD 1KZ-TE * 14 : RHD 5L-E * 15 : RHD 5-Door * 16 : RHD 3-Door * 17 : RHD 8Way Power Seat
* 18 : RHD Except 8Way Power Seat

: Connector Joining Wire Harness and Wire Harness

Code	See Page	Joining Wire Harness and Wire Harness (Connector Location)
IA1	88 (LHD)	Front Door LH Wire and Instrument Panel Wire (Left Kick Panel)
	112 (RHD)	
IC4	88 (LHD)	Instrument Panel Wire and Engine Room Main Wire (Left Kick Panel)
	112 (RHD)	
ID1	90 (LHD)	Instrument Panel Wire and Floor No.2 Wire (Left Kick Panel)
	114 (RHD)	
IF1	90 (LHD)	Instrument Panel Wire and Instrument Panel Wire (Near the J/B No.1)
	114 (RHD)	
IH1	90 (LHD)	Instrument Panel Wire and Instrument Panel No.2 Wire (Instrument Panel Brace LH)
	114 (RHD)	
IN4	94 (LHD)	Instrument Panel Wire and Floor Wire (Right Kick Panel)
	118 (RHD)	
IO1	94 (LHD)	Front Door RH Wire and Instrument Panel Wire (Right Kick Panel)
	118 (RHD)	
BA1	96 (*6)	Rear Door LH Wire and Instrument Panel Wire (Center Pillar LH)
	120 (*15)	
BB1	96 (*6)	Rear Door RH Wire and Instrument Panel Wire (Center Pillar RH)
	120 (*15)	

: Ground Points

Code	See Page	Ground Points Location
IM	88 (LHD)	Instrument Panel Brace LH
	112 (RHD)	Instrument Panel Brace RH

: Splice Points

Code	See Page	Wire Harness with Splice Points	Code	See Page	Wire Harness with Splice Points
I6	90 (LHD)	Instrument Panel Wire	I7	90 (LHD)	Instrument Panel Wire
	114 (RHD)			114 (RHD)	

* 1 : LHD 1GR-FE * 2 : LHD 3RZ-FE * 3 : LHD 1KD-FTV * 4 : LHD 1KZ-TE * 5 : LHD 5L-E * 6 : LHD 5-Door * 7 : LHD 3-Door
* 8 : LHD 8Way Power Seat * 9 : LHD Except 8Way Power Seat * 10 : RHD 1GR-FE * 11 : RHD 3RZ-FE * 12 : RHD 1KD-FTV
* 13 : RHD 1KZ-TE * 14 : RHD 5L-E * 15 : RHD 5-Door * 16 : RHD 3-Door * 17 : RHD 8Way Power Seat
* 18 : RHD Except 8Way Power Seat

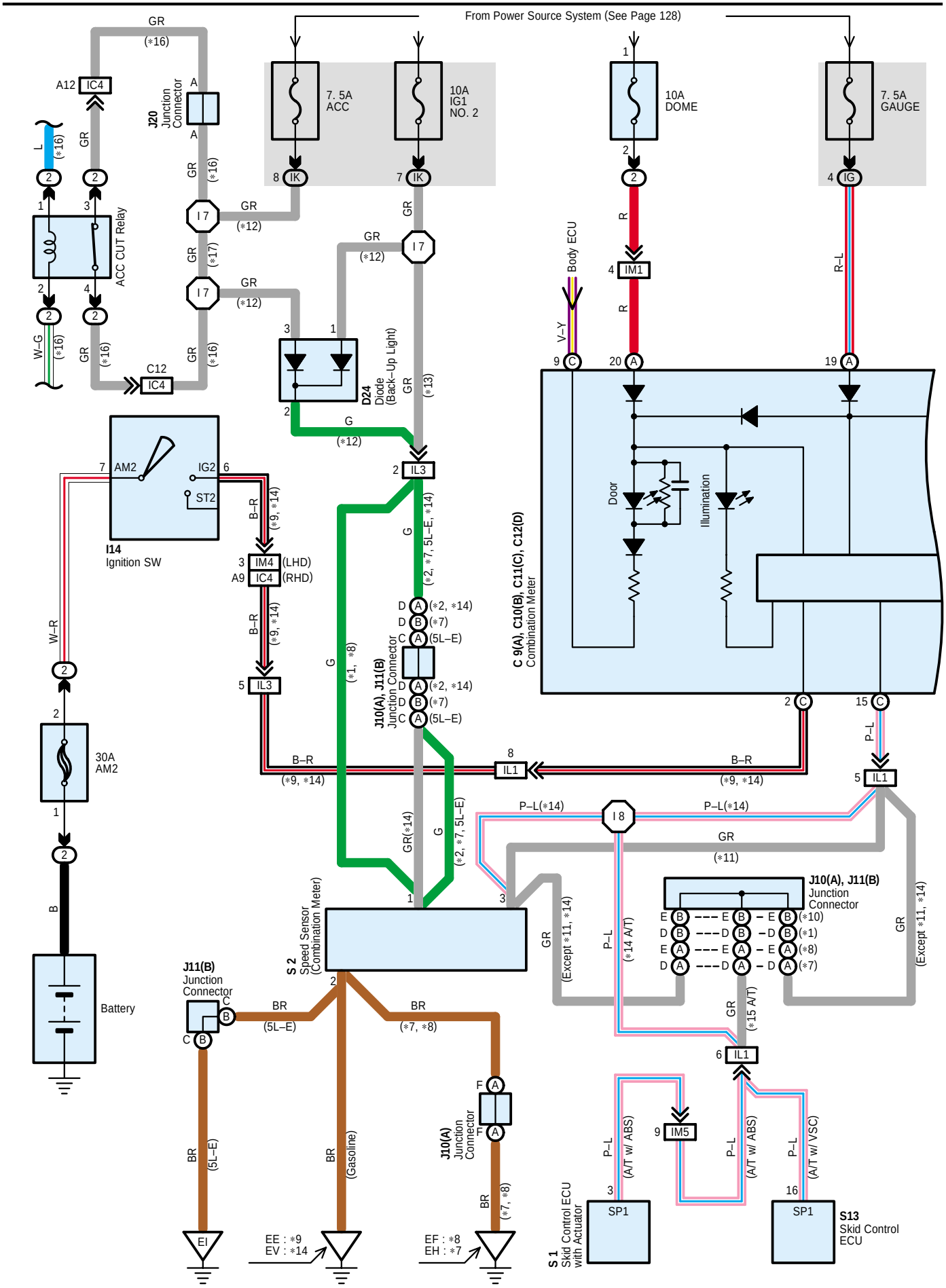
From Power Source System (See Page 128)
7. 5A ACC
10A IG1 NO. 2
10A DOME
7. 5A GAUGE
ACC CUT Relay
J20 Junction Connector
D24 Diode (Back–Up Light)
I14 Ignition SW
30A AM2
Battery
Body ECU
C 9(A), C10(B), C11(C), C12(D) Combination Meter
Door
Illumination
J10(A), J11(B) Junction Connector
S 2 Speed Sensor (Combination Meter)
J11(B) Junction Connector
J10(A) Junction Connector
S 1 Skid Control ECU with Actuator
S13 Skid Control ECU
EE : *9
EV : *14
EF : *8
EH : *7

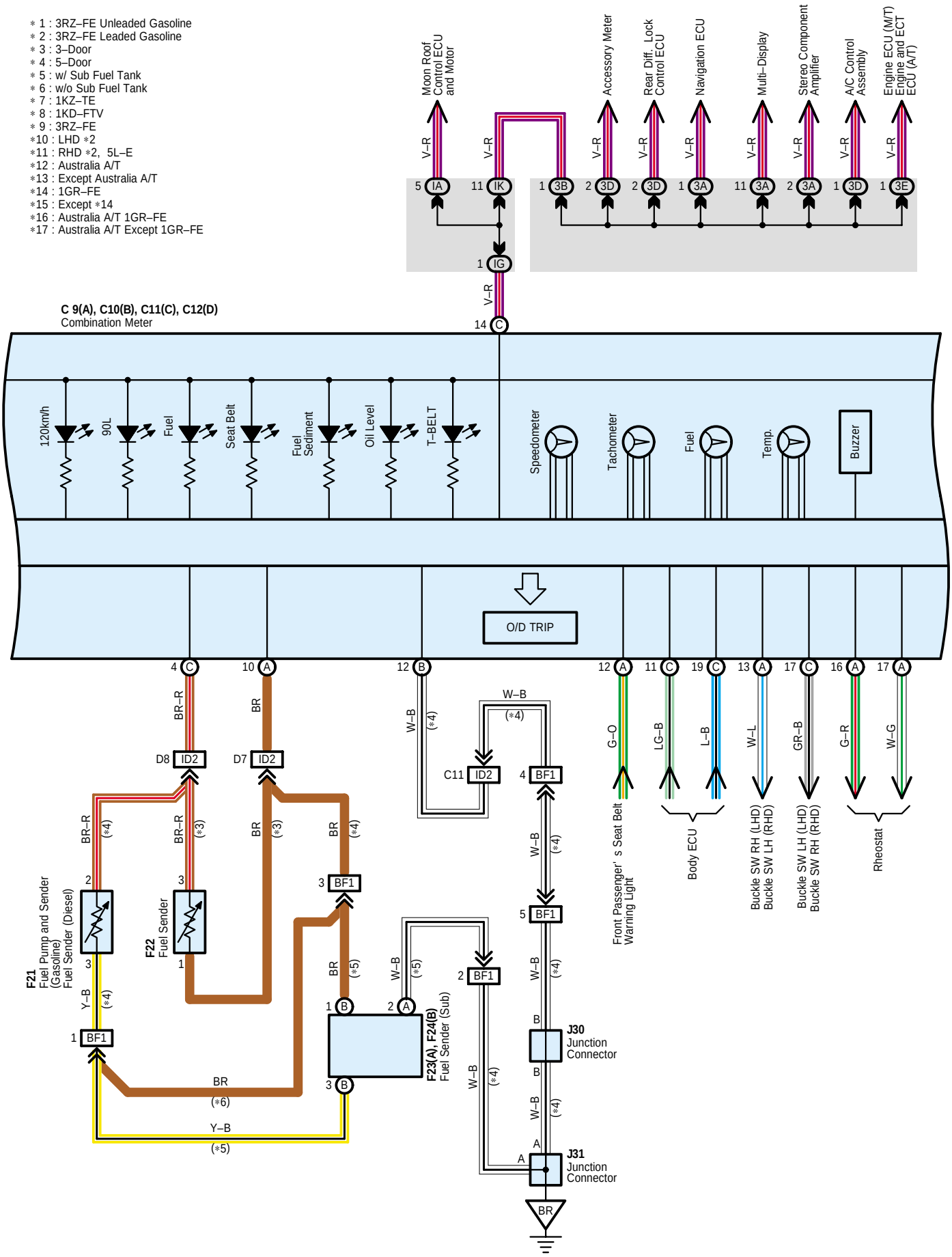
∗ 1 : 3RZ–FE Unleaded Gasoline
∗ 2 : 3RZ–FE Leaded Gasoline
∗ 3 : 3–Door
∗ 4 : 5–Door
∗ 5 : w/ Sub Fuel Tank
∗ 6 : w/o Sub Fuel Tank
∗ 7 : 1KZ–TE
∗ 8 : 1KD–FTV
∗ 9 : 3RZ–FE
∗10 : LHD ∗2
∗11 : RHD ∗2, 5L–E
∗12 : Australia A/T
∗13 : Except Australia A/T
∗14 : 1GR–FE
∗15 : Except ∗14
∗16 : Australia A/T 1GR–FE
∗17 : Australia A/T Except 1GR–FE
Moon Roof Control ECU and Motor
Accessory Meter
Rear Diff. Lock Control ECU
Navigation ECU
Multi–Display
Stereo Component Amplifier
A/C Control Assembly
Engine ECU (M/T) Engine and ECT ECU (A/T)
C 9(A), C10(B), C11(C), C12(D)
Combination Meter
120km/h
90L
Fuel
Seat Belt
Fuel Sediment
Oil Level
T–BELT
Speedometer
Tachometer
Fuel
Temp.
Buzzer
O/D TRIP
F21 Fuel Pump and Sender (Gasoline) Fuel Sender (Diesel)
F22 Fuel Sender
F23(A), F24(B) Fuel Sender (Sub)
J30 Junction Connector
J31 Junction Connector
Front Passenger's Seat Belt Warning Light
Body ECU
Buckle SW RH (LHD) Buckle SW LH (RHD)
Buckle SW LH (LHD) Buckle SW RH (RHD)
Rheostat

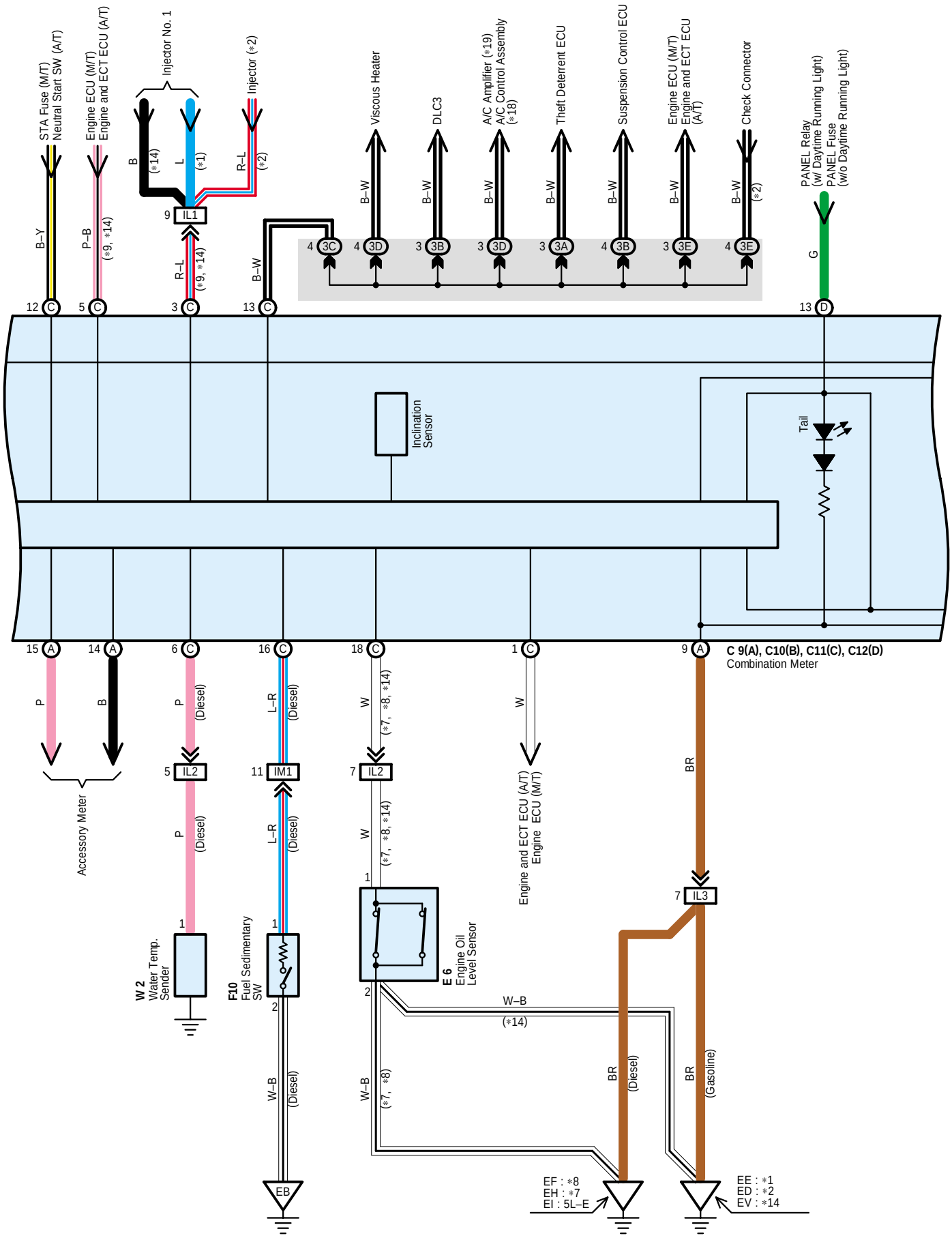
STA Fuse (M/T)
Neutral Start SW (A/T)
Engine ECU (M/T)
Engine and ECT ECU (A/T)
Injector No. 1
Injector (*2)
Viscous Heater
DLC3
A/C Amplifier (*19)
A/C Control Assembly
(*18)
Theft Deterrent ECU
Suspension Control ECU
Engine ECU (M/T)
Engine and ECT ECU
(A/T)
Check Connector
PANEL Relay
(w/ Daytime Running Light)
PANEL Fuse
(w/o Daytime Running Light)
B–Y
P–B
(*9, *14)
B
(*14)
L
(*1)
R–L
(*2)
R–L
(*9, *14)
B–W
B–W
G
IL1
Inclination Sensor
Tail
C 9(A), C10(B), C11(C), C12(D)
Combination Meter
Accessory Meter
P
B
P
(Diesel)
L–R
(Diesel)
W
(*7, *8, *14)
W
BR
IL2
IM1
IL2
IL3
Engine and ECT ECU (A/T)
Engine ECU (M/T)
W 2
Water Temp.
Sender
F10
Fuel Sedimentary
SW
E 6
Engine Oil
Level Sensor
W–B
(*14)
W–B
(Diesel)
W–B
(*7, *8)
BR
(Diesel)
BR
(Gasoline)
EB
EF : *8
EH : *7
EI : 5L–E
EE : *1
ED : *2
EV : *14

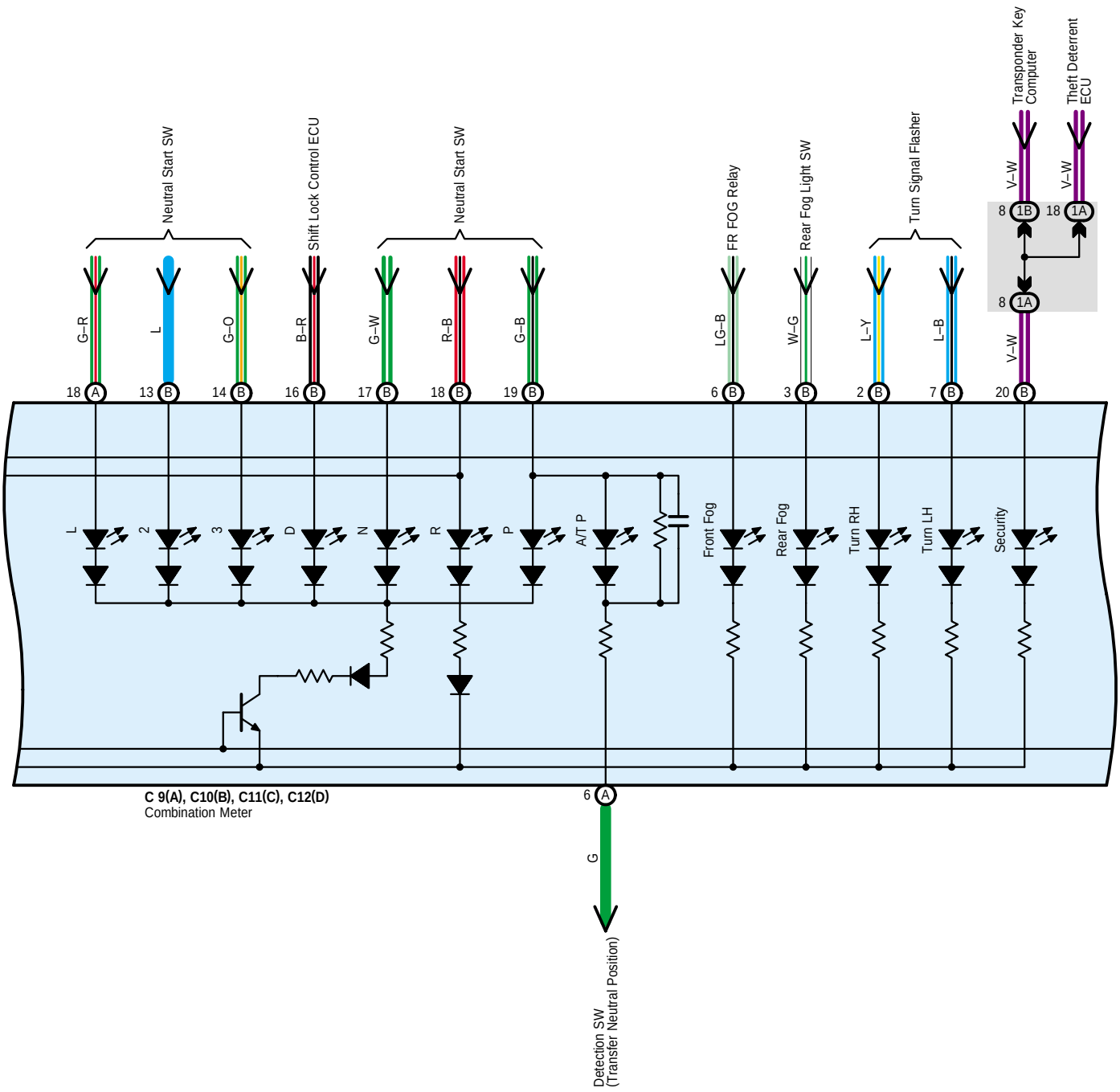

∗ 1 : 3RZ–FE Unleaded Gasoline
∗ 2 : 3RZ–FE Leaded Gasoline
∗ 7 : 1KZ–TE
∗ 8 : 1KD–FTV
∗ 9 : 3RZ–FE
∗14 : 1GR–FE
∗18 : Automatic A/C
∗19 : Manual A/C

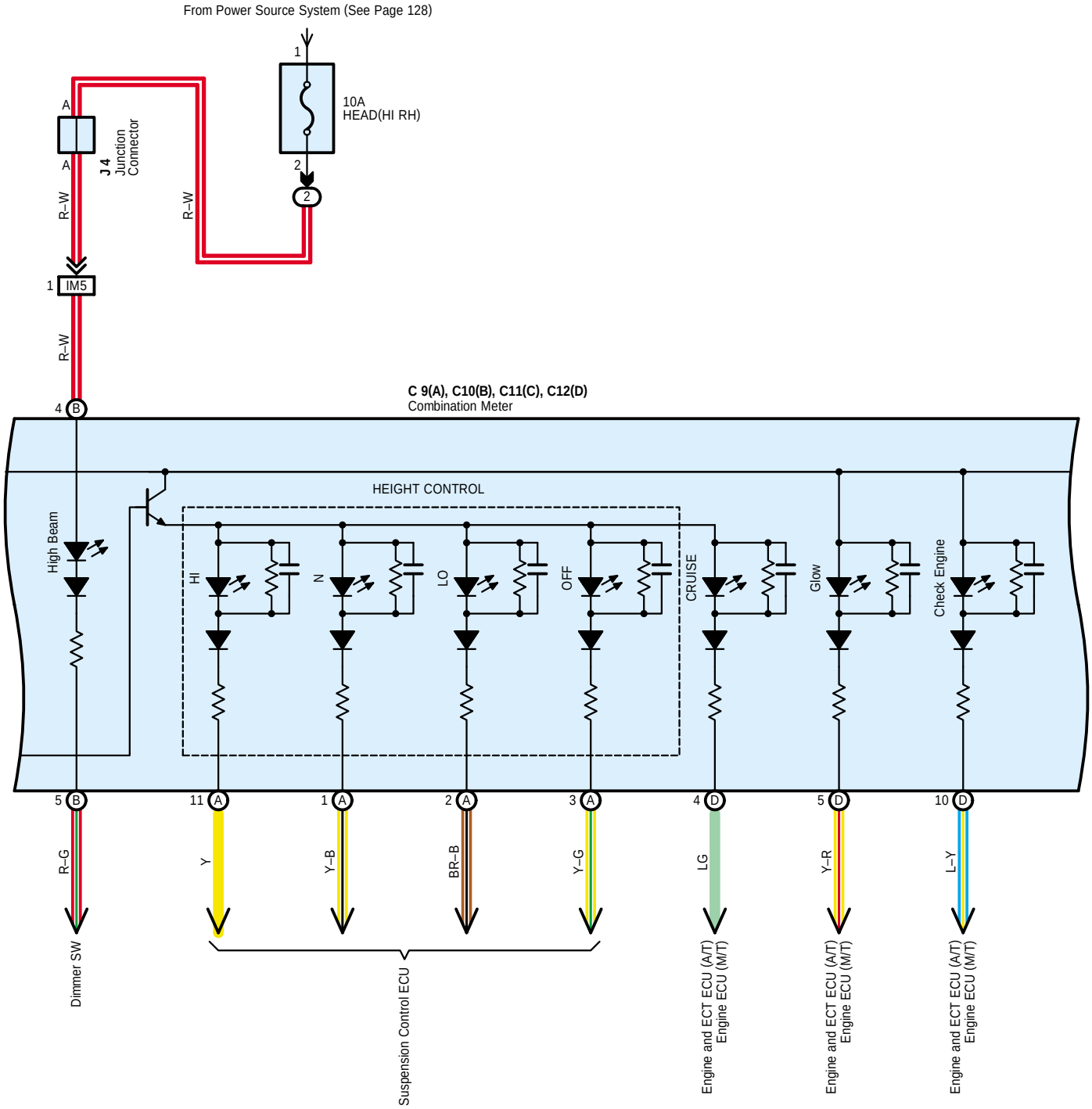
From Power Source System (See Page 128)
1
10A
HEAD(HI RH)
2
A
A
J 4
Junction
Connector
R–W
R–W
2
1
IM5
R–W
4
B
C 9(A), C10(B), C11(C), C12(D)
Combination Meter
HEIGHT CONTROL
High Beam
HI
N
LO
OFF
CRUISE
Glow
Check Engine
5 B
11 A
1 A
2 A
3 A
4 D
5 D
10 D
R–G
Y
Y–B
BR–B
Y–G
LG
Y–R
L–Y
Dimmer SW
Suspension Control ECU
Engine and ECT ECU (A/T)
Engine ECU (M/T)
Engine and ECT ECU (A/T)
Engine ECU (M/T)
Engine and ECT ECU (A/T)
Engine ECU (M/T)

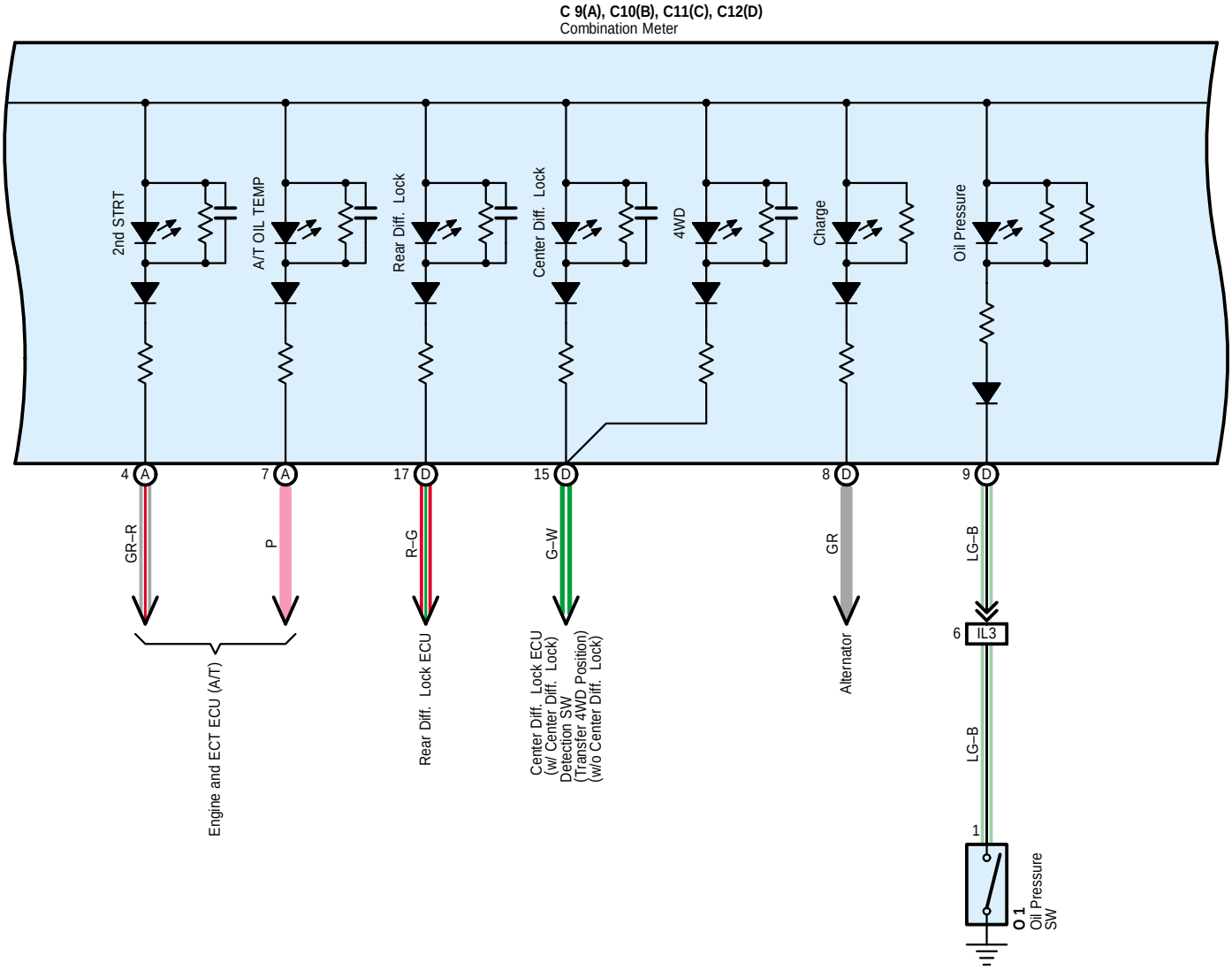
C 9(A), C10(B), C11(C), C12(D)
Combination Meter
2nd STRT
A/T OIL TEMP
Rear Diff. Lock
Center Diff. Lock
4WD
Charge
Oil Pressure
4
A
7
A
17
D
15
D
8
D
9
D
GR–R
P
R–G
G–W
GR
LG–B
6
IL3
LG–B
1
O 1
Oil Pressure SW
Engine and ECT ECU (A/T)
Rear Diff. Lock ECU
Center Diff. Lock ECU (w/ Center Diff. Lock) Detection SW (Transfer 4WD Position) (w/o Center Diff. Lock)
Alternator

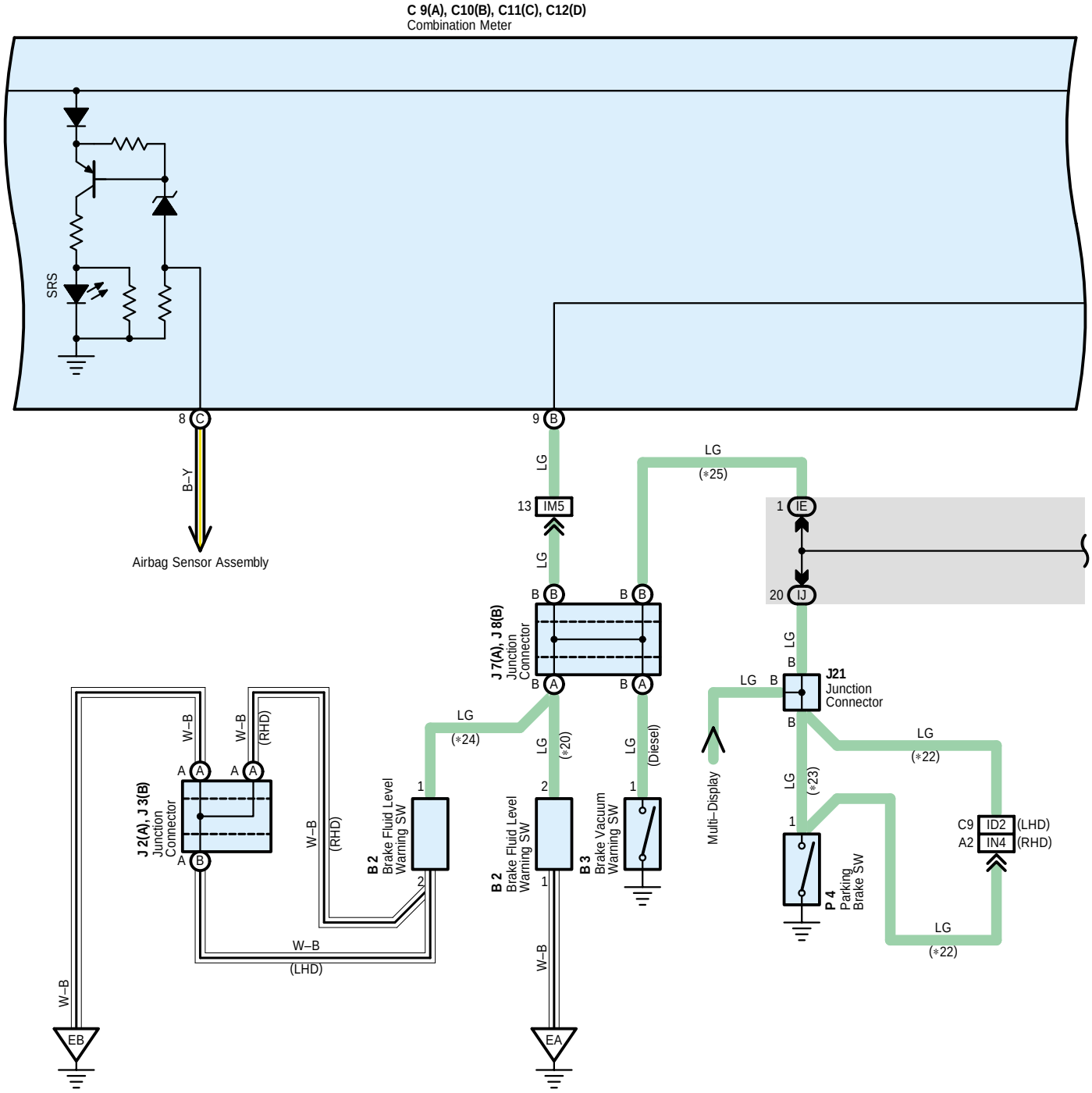
C 9(A), C10(B), C11(C), C12(D)
Combination Meter
SRS
8 C
9 B
B–Y
Airbag Sensor Assembly
LG
13 IM5
LG
(*25)
1 IE
20 IJ
J 7(A), J 8(B)
Junction
Connector
J21
Junction
Connector
LG
(*24)
LG
(*20)
LG
(Diesel)
LG
(*22)
LG
(*23)
Multi–Display
J 2(A), J 3(B)
Junction
Connector
W–B
(RHD)
W–B
(LHD)
B 2
Brake Fluid Level
Warning SW
B 2
Brake Fluid Level
Warning SW
B 3
Brake Vacuum
Warning SW
P 4
Parking
Brake SW
C9 ID2 (LHD)
A2 IN4 (RHD)
EB
EA

*20 : w/ VSC
*21 : w/o VSC w/ ABS
*22 : Bench Seat
*23 : Separate Seat
*24 : w/o VSC
*25 : w/o VSC w/o ABS

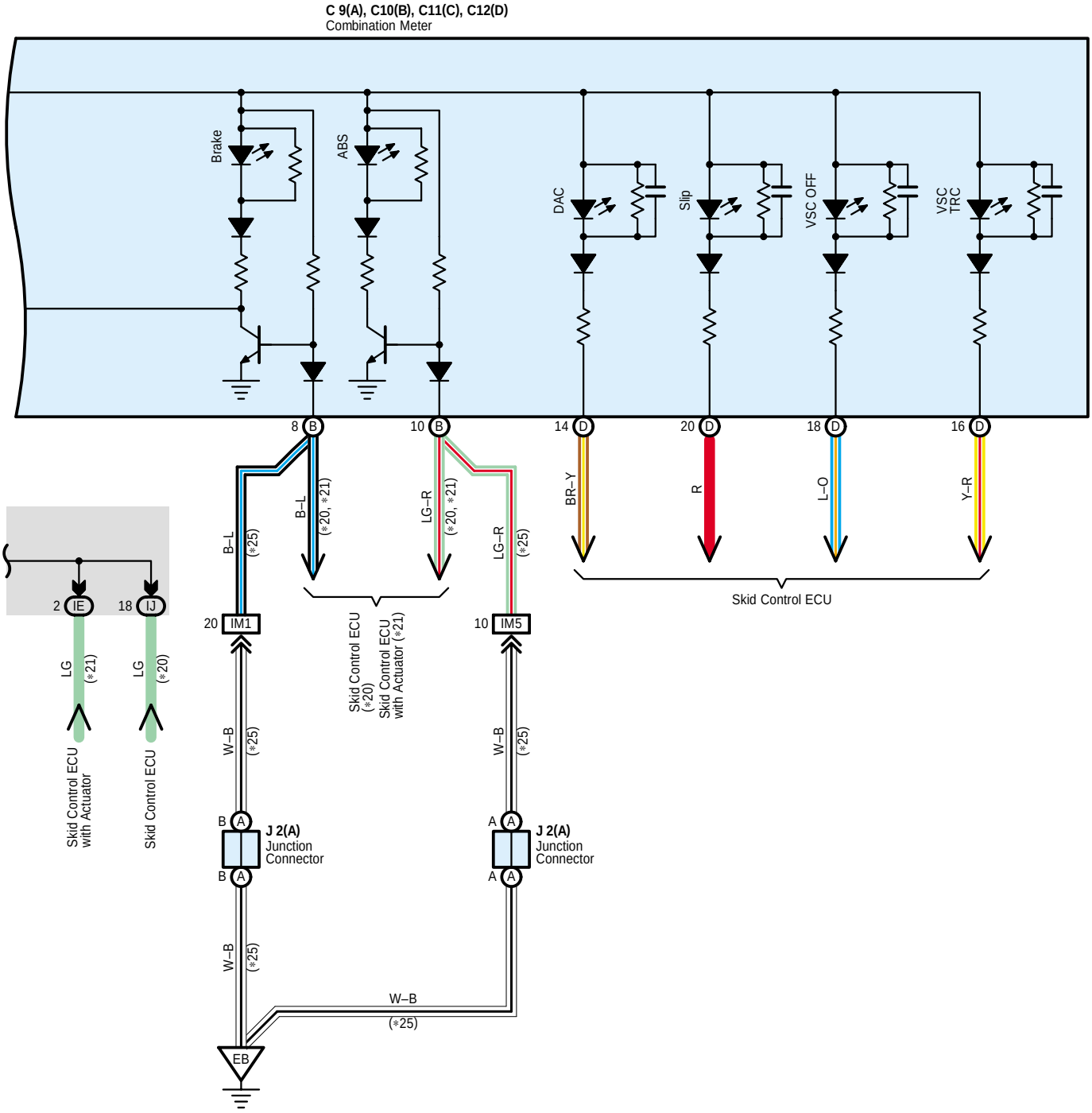

Service Hints

C9 (A), C10 (B) Combination Meter

(A) 19–Ground : Approx. 12 volts with the ignition SW at ON position
(A) 9, (B) 12–Ground : Always continuity
(A) 20–Ground : Always approx. 12 volts

○ : Parts Location

Code		See Page
B2		38 (*1)
		40 (*2)
		42 (*3)
		44 (*4)
		46 (*5)
		58 (*10)
		60 (*11)
		62 (*12)
		64 (*13)
		66 (*14)
B3		42 (*3)
		44 (*4)
		46 (*5)
		62 (*12)
		64 (*13)
		66 (*14)
C9	A	49 (LHD)
		69 (RHD)
C10	B	49 (LHD)
		69 (RHD)
C11	C	49 (LHD)
		69 (RHD)
C12	D	49 (LHD)
		69 (RHD)
D24		69 (RHD)
E6		38 (*1)
		42 (*3)
		44 (*4)
		58 (*10)
		62 (*12)
		64 (*13)
F10		42 (*3)
		44 (*4)
		46 (*5)
		62 (*12)
		64 (*13)
		66 (*14)
F21		52 (*6)
		72 (*15)
F22		54 (*7)
		74 (*16)
F23	A	52 (*6)
		72 (*15)
F24	B	52 (*6)

Code		See Page
F24	B	72 (*15)
I14		50 (LHD)
		70 (RHD)
J2	A	39 (*1)
		41 (*2)
		43 (*3)
		45 (*4)
		47 (*5)
		59 (*10)
		61 (*11)
		63 (*12)
		65 (*13)
		67 (*14)
J3	B	39 (*1)
		41 (*2)
		43 (*3)
		45 (*4)
		47 (*5)
J4		39 (*1)
		41 (*2)
		43 (*3)
		45 (*4)
		47 (*5)
		59 (*10)
		61 (*11)
		63 (*12)
		65 (*13)
		67 (*14)
J7	A	50 (LHD)
		70 (RHD)
J8	B	50 (LHD)
		70 (RHD)
J10	A	50 (LHD)
		70 (RHD)
J11	B	50 (LHD)
		70 (RHD)
J20		50 (LHD)
		70 (RHD)
J21		50 (LHD)
		70 (RHD)
J30		52 (*6)
		54 (*7)
		72 (*15)
		74 (*16)

Code	See Page
J31	52 (*6)
	54 (*7)
	72 (*15)
	74 (*16)
O1	39 (*1)
	41 (*2)
	43 (*3)
	45 (*4)
	47 (*5)
	59 (*10)
	61 (*11)
	63 (*12)
	65 (*13)
	67 (*14)
P4	51 (LHD)
	71 (RHD)
S1	39 (*1)
	41 (*2)
	43 (*3)
	45 (*4)
	59 (*10)
	61 (*11)
	63 (*12)
	65 (*13)
S2	39 (*1)
	41 (*2)
	43 (*3)
	45 (*4)
	47 (*5)
	59 (*10)
	61 (*11)
	63 (*12)
	65 (*13)
	67 (*14)
S13	51 (LHD)
	71 (RHD)
W2	43 (*3)
	45 (*4)
	47 (*5)
	63 (*12)
	65 (*13)
	67 (*14)

⬭ : Relay Blocks

Code	See Page	Relay Blocks (Relay Block Location)
2	23	Engine Room R/B (Engine Compartment Left)

* 1 : LHD 1GR-FE * 2 : LHD 3RZ-FE * 3 : LHD 1KD-FTV * 4 : LHD 1KZ-TE * 5 : LHD 5L-E * 6 : LHD 5-Door * 7 : LHD 3-Door
* 8 : LHD 8Way Power Seat * 9 : LHD Except 8Way Power Seat * 10 : RHD 1GR-FE * 11 : RHD 3RZ-FE * 12 : RHD 1KD-FTV
* 13 : RHD 1KZ-TE * 14 : RHD 5L-E * 15 : RHD 5-Door * 16 : RHD 3-Door * 17 : RHD 8Way Power Seat
* 18 : RHD Except 8Way Power Seat

: **Junction Block and Wire Harness Connector**

Code	See Page	Junction Block and Wire Harness (Connector Location)
IA	26 (LHD)	Roof Wire and Driver Side J/B (Lower Finish Panel)
	28 (RHD)	
IE	26 (LHD)	Engine Room Main Wire and Driver Side J/B (Lower Finish Panel)
	28 (RHD)	
IG	27 (LHD)	Instrument Panel Wire and Driver Side J/B (Lower Finish Panel)
	29 (RHD)	
IJ	27 (LHD)	
	29 (RHD)	
IK	27 (LHD)	
	29 (RHD)	
1A	32 (LHD)	Instrument Panel Wire and J/B No.1 (Instrument Panel Reinforcement Left)
	32 (RHD)	Instrument Panel Wire and J/B No.1 (Instrument Panel Reinforcement Right)
1B	32 (LHD)	Instrument Panel Wire and J/B No.1 (Instrument Panel Reinforcement Left)
	32 (RHD)	Instrument Panel Wire and J/B No.1 (Instrument Panel Reinforcement Right)
3A	36 (LHD)	Instrument Panel Wire and J/B No.3 (Instrument Panel Reinforcement Right)
	36 (RHD)	Instrument Panel Wire and J/B No.3 (Instrument Panel Reinforcement Left)
3B	36 (LHD)	Instrument Panel Wire and J/B No.3 (Instrument Panel Reinforcement Right)
	36 (RHD)	Instrument Panel Wire and J/B No.3 (Instrument Panel Reinforcement Left)
3C	36 (LHD)	Instrument Panel Wire and J/B No.3 (Instrument Panel Reinforcement Right)
	36 (RHD)	Instrument Panel Wire and J/B No.3 (Instrument Panel Reinforcement Left)
3D	36 (LHD)	Instrument Panel Wire and J/B No.3 (Instrument Panel Reinforcement Right)
	36 (RHD)	Instrument Panel Wire and J/B No.3 (Instrument Panel Reinforcement Left)
3E	36 (LHD)	Instrument Panel Wire and J/B No.3 (Instrument Panel Reinforcement Right)
	36 (RHD)	Instrument Panel Wire and J/B No.3 (Instrument Panel Reinforcement Left)

: **Connector Joining Wire Harness and Wire Harness**

Code	See Page	Joining Wire Harness and Wire Harness (Connector Location)
IC4	112 (RHD)	Instrument Panel Wire and Engine Room Main Wire (Left Kick Panel)
ID2	90 (LHD)	Instrument Panel Wire and Floor No.2 Wire (Left Kick Panel)
	114 (RHD)	
IL1	92 (LHD)	Engine Wire and Instrument Panel Wire (Right Side of the Blower Unit)
	116 (RHD)	Engine Wire and Instrument Panel Wire (Left Side of the Blower Unit)
IL2	92 (LHD)	Engine Wire and Instrument Panel Wire (Right Side of the Blower Unit)
	116 (RHD)	Engine Wire and Instrument Panel Wire (Left Side of the Blower Unit)
IL3	92 (LHD)	Engine Wire and Instrument Panel Wire (Right Side of the Blower Unit)
	116 (RHD)	Engine Wire and Instrument Panel Wire (Left Side of the Blower Unit)
IM1	92 (LHD)	Instrument Panel Wire and Engine Room Main Wire (Right Kick Panel)
	116 (RHD)	
IM4	92 (LHD)	
IM5	92 (LHD)	
	116 (RHD)	
IN4	118 (RHD)	Instrument Panel Wire and Floor Wire (Right Kick Panel)
BF1	98 (*6)	Floor No.2 Wire and Frame No.2 Wire (Left Side of the Rear Floor)
	122 (*15)	

* 1 : LHD 1GR-FE * 2 : LHD 3RZ-FE * 3 : LHD 1KD-FTV * 4 : LHD 1KZ-TE * 5 : LHD 5L-E * 6 : LHD 5-Door * 7 : LHD 3-Door
* 8 : LHD 8Way Power Seat * 9 : LHD Except 8Way Power Seat * 10 : RHD 1GR-FE * 11 : RHD 3RZ-FE * 12 : RHD 1KD-FTV
* 13 : RHD 1KZ-TE * 14 : RHD 5L-E * 15 : RHD 5-Door * 16 : RHD 3-Door * 17 : RHD 8Way Power Seat
* 18 : RHD Except 8Way Power Seat

▽ : **Ground Points**

Code	See Page	Ground Points Location
EA	78 (*1)	Front Right Fender
	80 (*2)	
	82 (*3)	
	84 (*4)	
	86 (*5)	
	102 (*10)	
	104 (*11)	
	106 (*12)	
	108 (*13)	
	110 (*14)	
EB	78 (*1)	Front Left Fender
	80 (*2)	
	82 (*3)	
	84 (*4)	
	86 (*5)	
	102 (*10)	
	104 (*11)	
	106 (*12)	
	108 (*13)	
	110 (*14)	
ED	80 (*2)	Ignition Coil Bracket
	104 (*11)	
EE	80 (*2)	Intake Manifold
	104 (*11)	
EF	82 (*3)	Rear Part of Cylinder Block
	106 (*12)	
EH	84 (*4)	
	108 (*13)	
EI	86 (*5)	
	110 (*14)	
EV	78 (*1)	Rear Side of Left Bank Cylinder Block
	102 (*10)	
BR	96 (*6)	Left Quarter Panel Inner
	100 (*7)	
	120 (*15)	
	124 (*16)	

⬡ : **Splice Points**

Code	See Page	Wire Harness with Splice Points	Code	See Page	Wire Harness with Splice Points
I7	90 (LHD)	Instrument Panel Wire	I8	90 (LHD)	Engine Wire
	114 (RHD)			114 (RHD)	

* 1 : LHD 1GR-FE * 2 : LHD 3RZ-FE * 3 : LHD 1KD-FTV * 4 : LHD 1KZ-TE * 5 : LHD 5L-E * 6 : LHD 5-Door * 7 : LHD 3-Door
* 8 : LHD 8Way Power Seat * 9 : LHD Except 8Way Power Seat * 10 : RHD 1GR-FE * 11 : RHD 3RZ-FE * 12 : RHD 1KD-FTV
* 13 : RHD 1KZ-TE * 14 : RHD 5L-E * 15 : RHD 5-Door * 16 : RHD 3-Door * 17 : RHD 8Way Power Seat
* 18 : RHD Except 8Way Power Seat

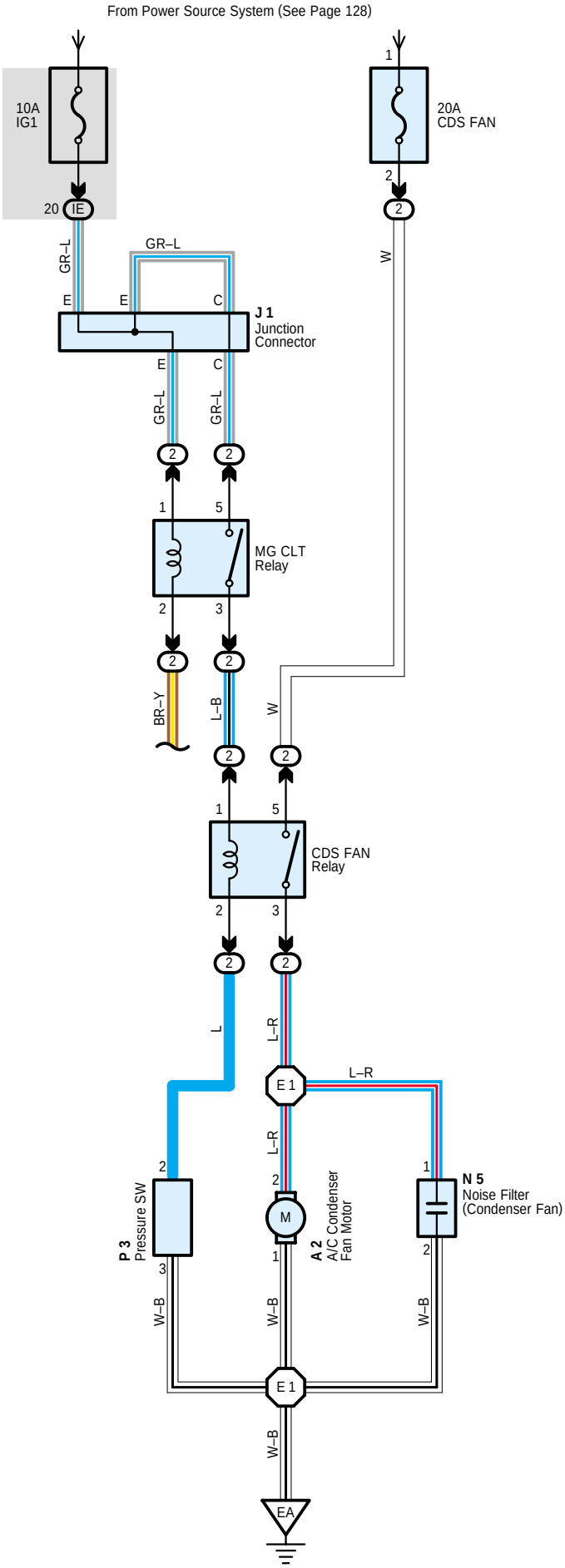
From Power Source System (See Page 128)
10A
IG1
20
IE
GR–L
E
E
C
J 1
Junction
Connector
E
C
GR–L
GR–L
2
2
1
5
MG CLT
Relay
2
3
2
2
BR–Y
L–B
W
2
2
1
5
CDS FAN
Relay
2
3
2
2
L
L–R
E 1
L–R
L–R
2
M
A 2
A/C Condenser
Fan Motor
1
2
P 3
Pressure SW
3
W–B
W–B
W–B
E 1
W–B
EA
1
20A
CDS FAN
2
2
W
1
N 5
Noise Filter
(Condenser Fan)
2

Service Hints

P3 Pressure SW

3–2 : Close above approx. 15.5 kgf/cm^2 (224 psi, 1520 kpa)
Open below approx. 12.5 kgf/cm^2 (181 psi, 1225 kpa)

: Parts Location

Code	See Page	Code	See Page	Code	See Page
A2	38 (*1)	J1	47 (*5)	N5	65 (*13)
	40 (*2)		59 (*10)		67 (*14)
	42 (*3)		61 (*11)	P3	39 (*1)
	44 (*4)		63 (*12)		41 (*2)
	46 (*5)		65 (*13)		43 (*3)
	58 (*10)		67 (*14)		45 (*4)
	60 (*11)	N5	39 (*1)		47 (*5)
	62 (*12)		41 (*2)		59 (*10)
	64 (*13)		43 (*3)		61 (*11)
	66 (*14)		45 (*4)		63 (*12)
J1	39 (*1)		47 (*5)		65 (*13)
	41 (*2)		59 (*10)		67 (*14)
	43 (*3)		61 (*11)		
	45 (*4)		63 (*12)		

: Relay Blocks

Code	See Page	Relay Blocks (Relay Block Location)
2	23	Engine Room R/B (Engine Compartment Left)

: Junction Block and Wire Harness Connector

Code	See Page	Junction Block and Wire Harness (Connector Location)
IE	26 (LHD)	Engine Room Main Wire and Driver Side J/B (Lower Finish Panel)
	28 (RHD)	

: Ground Points

Code	See Page	Ground Points Location
EA	78 (*1)	Front Right Fender
	80 (*2)	
	82 (*3)	
	84 (*4)	
	86 (*5)	
	102 (*10)	
	104 (*11)	
	106 (*12)	
	108 (*13)	
	110 (*14)	

* 1 : LHD 1GR–FE * 2 : LHD 3RZ–FE * 3 : LHD 1KD–FTV * 4 : LHD 1KZ–TE * 5 : LHD 5L–E * 6 : LHD 5–Door * 7 : LHD 3–Door
* 8 : LHD 8Way Power Seat * 9 : LHD Except 8Way Power Seat * 10 : RHD 1GR–FE * 11 : RHD 3RZ–FE * 12 : RHD 1KD–FTV
* 13 : RHD 1KZ–TE * 14 : RHD 5L–E * 15 : RHD 5–Door * 16 : RHD 3–Door * 17 : RHD 8Way Power Seat
* 18 : RHD Except 8Way Power Seat

Condenser Fan

: **Splice Points**

Code	See Page	Wire Harness with Splice Points	Code	See Page	Wire Harness with Splice Points
E1	78 (*1)	Engine Room Main Wire	E1	102 (*10)	Engine Room Main Wire
	80 (*2)			104 (*11)	
	82 (*3)			106 (*12)	
	84 (*4)			108 (*13)	
	86 (*5)			110 (*14)	

* 1 : LHD 1GR-FE * 2 : LHD 3RZ-FE * 3 : LHD 1KD-FTV * 4 : LHD 1KZ-TE * 5 : LHD 5L-E * 6 : LHD 5-Door * 7 : LHD 3-Door
* 8 : LHD 8Way Power Seat * 9 : LHD Except 8Way Power Seat * 10 : RHD 1GR-FE * 11 : RHD 3RZ-FE * 12 : RHD 1KD-FTV
* 13 : RHD 1KZ-TE * 14 : RHD 5L-E * 15 : RHD 5-Door * 16 : RHD 3-Door * 17 : RHD 8Way Power Seat
* 18 : RHD Except 8Way Power Seat

Viscous Heater

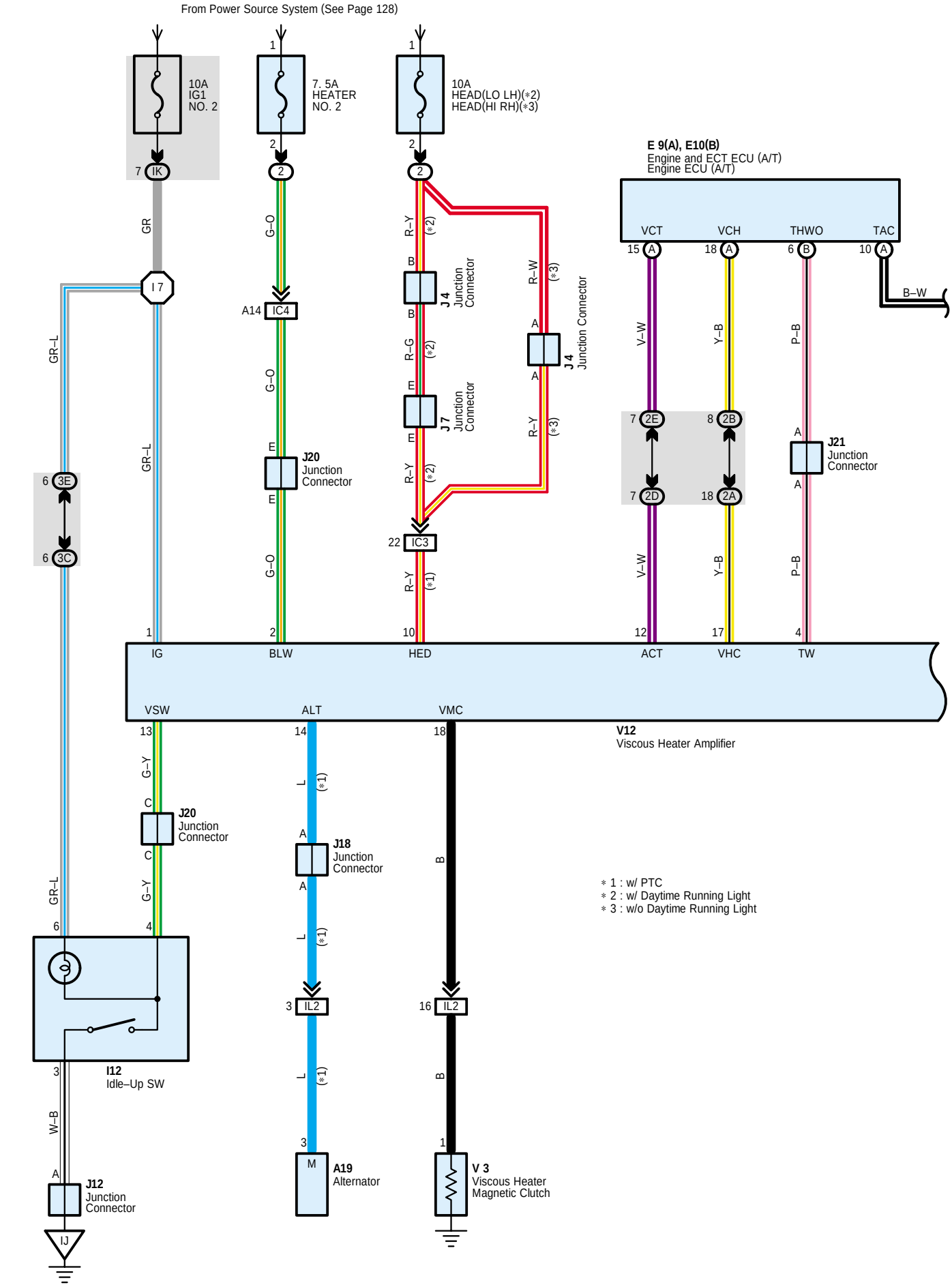

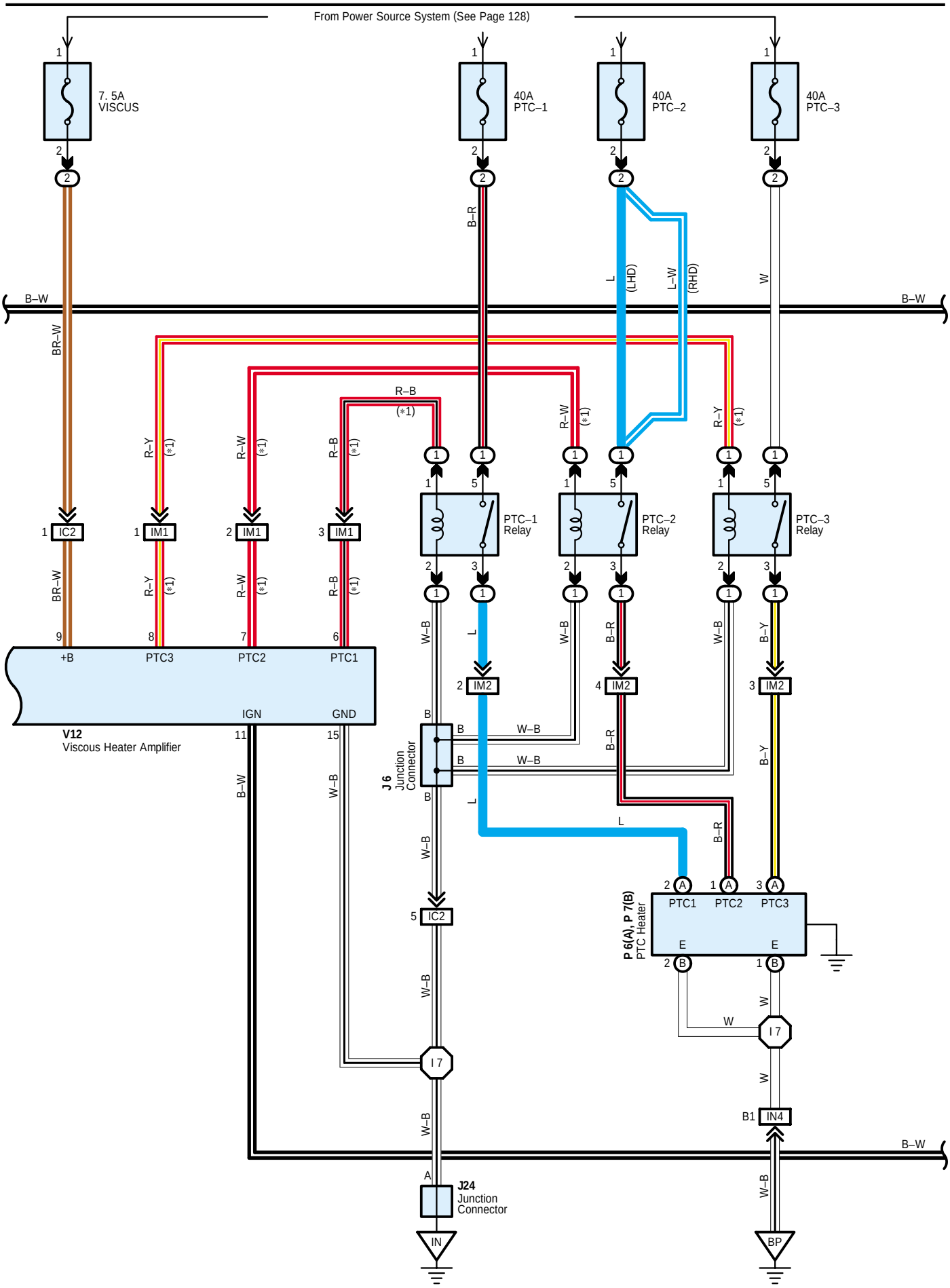
From Power Source System (See Page 128)
7. 5A
VISCUS
40A
PTC–1
40A
PTC–2
40A
PTC–3
B–W
BR–W
B–R
L
(LHD)
L–W
(RHD)
W
R–Y
R–W
R–B
(*1)
IC2
IM1
PTC–1
Relay
PTC–2
Relay
PTC–3
Relay
+B
PTC3
PTC2
PTC1
IGN
GND
V12
Viscous Heater Amplifier
W–B
B–Y
IM2
J 6
Junction
Connector
P 6(A), P 7(B)
PTC Heater
I 7
IN4
J24
Junction
Connector
IN
BP

Viscous Heater

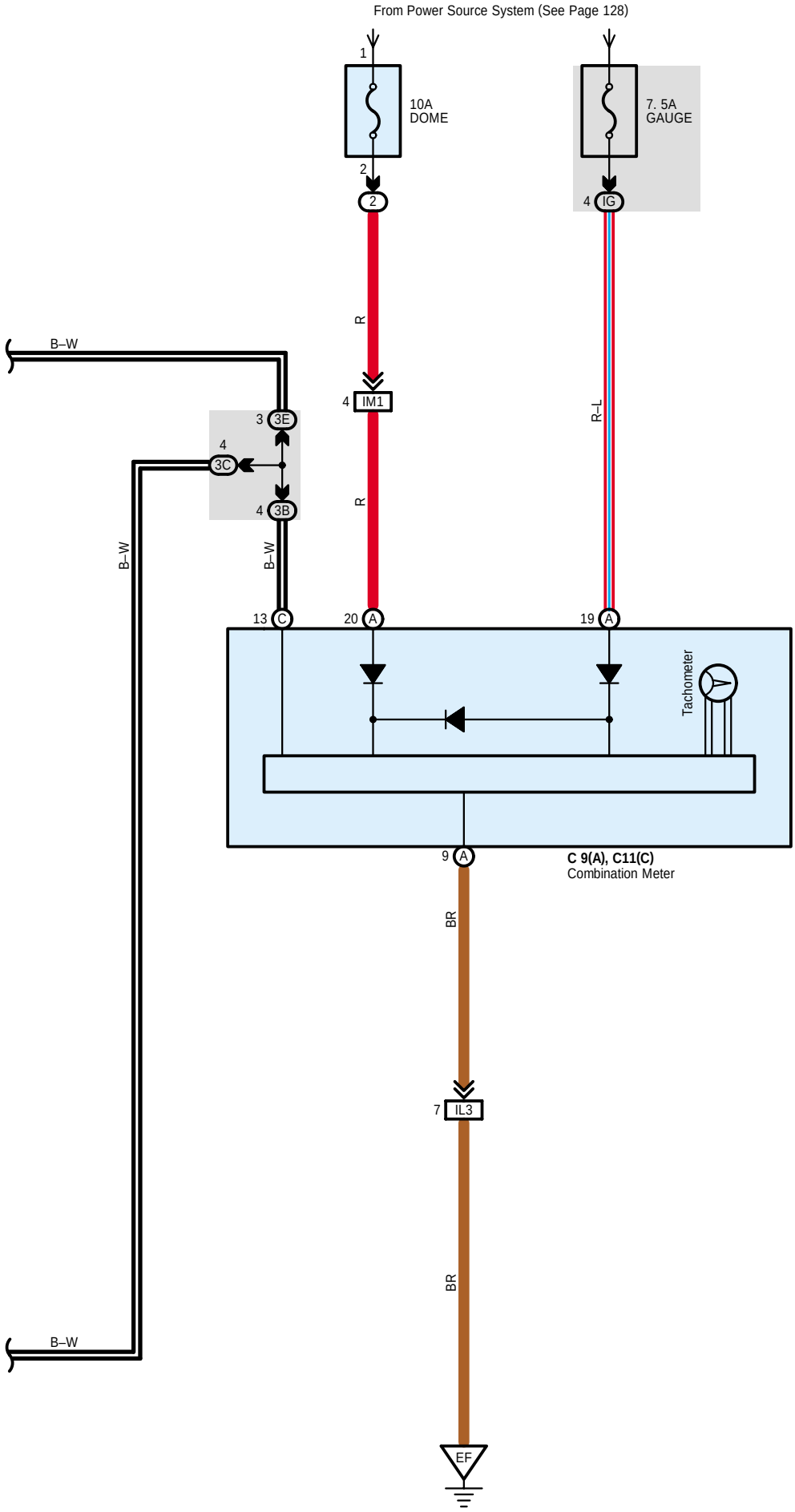

System Outline

A drive belt drives the viscous heater, which is located on top of the engine. Pressing the power heater switch provided in the instrument panel engages the magnetic clutch causing the rotor in the viscous heater to rotate and the silicon oil to mix. With the rise of the coolant temperature caused by these factors such as the shear heat generated when the silicon oil is mixed and the engine load at this time, the viscous heater supplements the rise of heater operation temperature.

Service Hints

V12 Viscous Heater Amplifier

1–Ground : Approx. 12 volts with ignition SW at ON position
9–Ground : Always approx. 12 volts
15–Ground : Always continuity

: Parts Location

Code		See Page	Code	See Page	Code		See Page
A19		42 (*3)	J4	43 (*3)	J21		50 (LHD)
		62 (*12)		63 (*12)			70 (RHD)
C9	A	49 (LHD)	J6	43 (*3)	J24		50 (LHD)
		69 (RHD)		63 (*12)			70 (RHD)
C11	C	49 (LHD)	J7	50 (LHD)	P6	A	51 (LHD)
		69 (RHD)		70 (RHD)			71 (RHD)
E9	A	49 (LHD)	J12	50 (LHD)	P7	B	51 (LHD)
		69 (RHD)		70 (RHD)			71 (RHD)
E10	B	49 (LHD)	J18	50 (LHD)	V3		43 (*3)
		69 (RHD)		70 (RHD)			63 (*12)
I12		50 (LHD)	J20	50 (LHD)	V12		51 (LHD)
		70 (RHD)		70 (RHD)			71 (RHD)

: Relay Blocks

Code	See Page	Relay Blocks (Relay Block Location)
1	24 (LHD)	Engine Room R/B No.1 (Engine Compartment Right)
	24 (RHD)	Engine Room R/B No.1 (Engine Compartment Left)
2	23	Engine Room R/B (Engine Compartment Left)

: Junction Block and Wire Harness Connector

Code	See Page	Junction Block and Wire Harness (Connector Location)
IG	27 (LHD)	Instrument Panel Wire and Driver Side J/B (Lower Finish Panel)
	29 (RHD)	
IK	27 (LHD)	
	29 (RHD)	
2A	34	Instrument Panel Wire and J/B No.2 (Instrument Panel Reinforcement Center)
2B		
2D		
2E		
3B	36 (LHD)	Instrument Panel Wire and J/B No.3 (Instrument Panel Reinforcement Right)
	36 (RHD)	Instrument Panel Wire and J/B No.3 (Instrument Panel Reinforcement Left)
3C	36 (LHD)	Instrument Panel Wire and J/B No.3 (Instrument Panel Reinforcement Right)
	36 (RHD)	Instrument Panel Wire and J/B No.3 (Instrument Panel Reinforcement Left)
3E	36 (LHD)	Instrument Panel Wire and J/B No.3 (Instrument Panel Reinforcement Right)
	36 (RHD)	Instrument Panel Wire and J/B No.3 (Instrument Panel Reinforcement Left)

* 1 : LHD 1GR–FE * 2 : LHD 3RZ–FE * 3 : LHD 1KD–FTV * 4 : LHD 1KZ–TE * 5 : LHD 5L–E * 6 : LHD 5–Door * 7 : LHD 3–Door
* 8 : LHD 8Way Power Seat * 9 : LHD Except 8Way Power Seat * 10 : RHD 1GR–FE * 11 : RHD 3RZ–FE * 12 : RHD 1KD–FTV
* 13 : RHD 1KZ–TE * 14 : RHD 5L–E * 15 : RHD 5–Door * 16 : RHD 3–Door * 17 : RHD 8Way Power Seat
* 18 : RHD Except 8Way Power Seat

: Connector Joining Wire Harness and Wire Harness

Code	See Page	Joining Wire Harness and Wire Harness (Connector Location)
IC2	88 (LHD)	Instrument Panel Wire and Engine Room Main Wire (Left Kick Panel)
	112 (RHD)	
IC3	88 (LHD)	
	112 (RHD)	
IC4	88 (LHD)	
	112 (RHD)	
IL2	92 (LHD)	Engine Wire and Instrument Panel Wire (Right Side of the Blower Unit)
	116 (RHD)	Engine Wire and Instrument Panel Wire (Left Side of the Blower Unit)
IL3	92 (LHD)	Engine Wire and Instrument Panel Wire (Right Side of the Blower Unit)
	116 (RHD)	Engine Wire and Instrument Panel Wire (Left Side of the Blower Unit)
IM1	92 (LHD)	Instrument Panel Wire and Engine Room Main Wire (Right Kick Panel)
	116 (RHD)	
IM2	92 (LHD)	
	116 (RHD)	
IN4	94 (LHD)	Instrument Panel Wire and Floor Wire (Right Kick Panel)
	118 (RHD)	

: Ground Points

Code	See Page	Ground Points Location
EF	82 (*3)	Rear Part of Cylinder Block
	106 (*12)	
IJ	88 (LHD)	Left Kick Panel
	112 (RHD)	Right Kick Panel
IN	88 (LHD)	Right Kick Panel
	112 (RHD)	Left Kick Panel
BP	96 (*6)	Under the Front Passenger's Seat
	100 (*7)	
	120 (*15)	Under the Driver's Seat
	124 (*16)	

: Splice Points

Code	See Page	Wire Harness with Splice Points	Code	See Page	Wire Harness with Splice Points
I7	90 (LHD)	Instrument Panel Wire	I7	114 (RHD)	Instrument Panel Wire

* 1 : LHD 1GR-FE * 2 : LHD 3RZ-FE * 3 : LHD 1KD-FTV * 4 : LHD 1KZ-TE * 5 : LHD 5L-E * 6 : LHD 5-Door * 7 : LHD 3-Door
* 8 : LHD 8Way Power Seat * 9 : LHD Except 8Way Power Seat * 10 : RHD 1GR-FE * 11 : RHD 3RZ-FE * 12 : RHD 1KD-FTV
* 13 : RHD 1KZ-TE * 14 : RHD 5L-E * 15 : RHD 5-Door * 16 : RHD 3-Door * 17 : RHD 8Way Power Seat
* 18 : RHD Except 8Way Power Seat

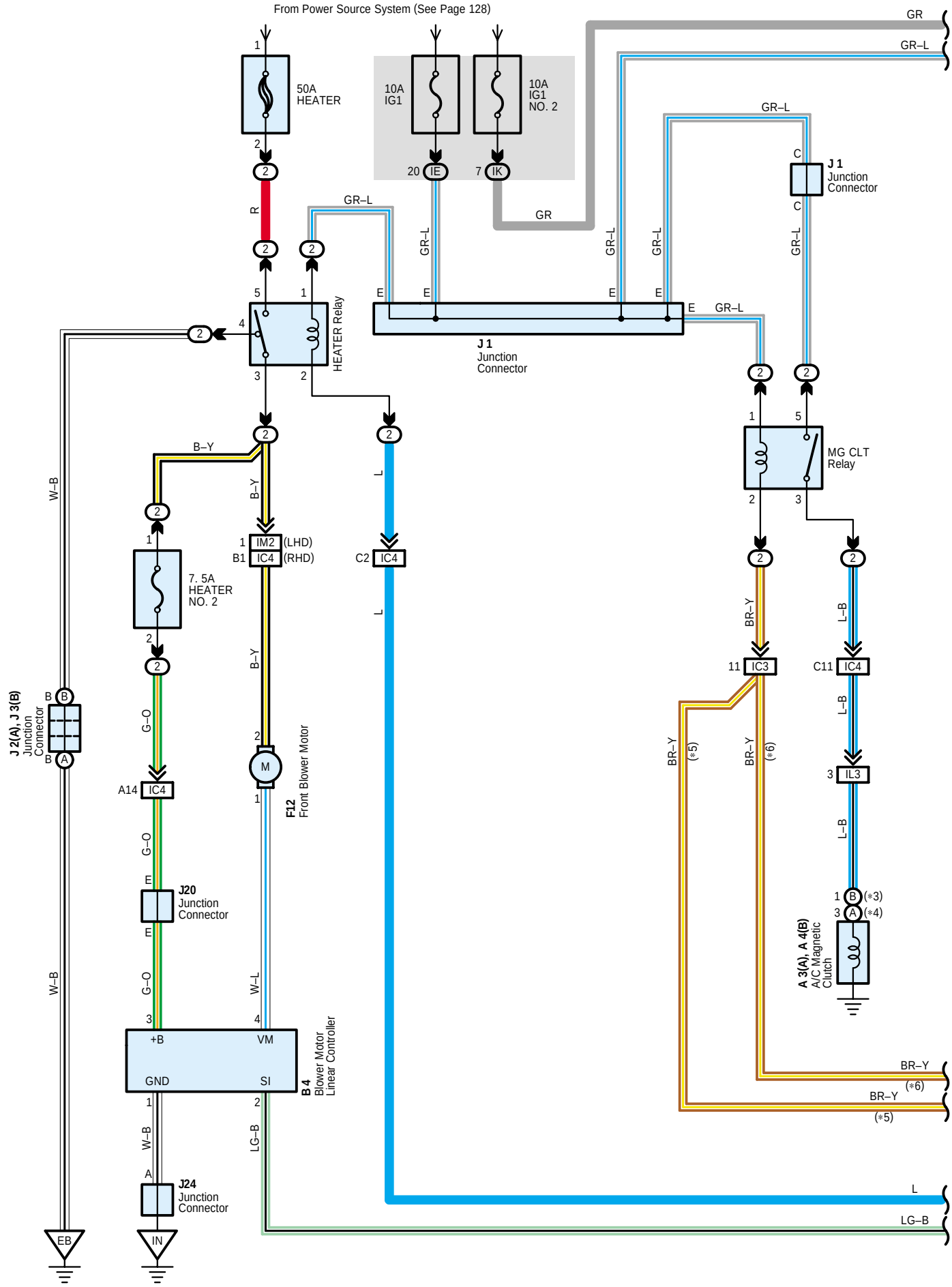
From Power Source System (See Page 128)
50A HEATER
10A IG1
10A IG1 NO. 2
HEATER Relay
J 1 Junction Connector
MG CLT Relay
7. 5A HEATER NO. 2
IM2 (LHD)
IC4 (RHD)
IC4
IC3
IL3
J 2(A), J 3(B) Junction Connector
F12 Front Blower Motor
J20 Junction Connector
B 4 Blower Motor Linear Controller
J24 Junction Connector
A 3(A), A 4(B) A/C Magnetic Clutch
EB
IN
GR
GR–L
R
B–Y
W–B
G–O
W–L
LG–B
L
L–B
BR–Y
(*3)
(*4)
(*5)
(*6)

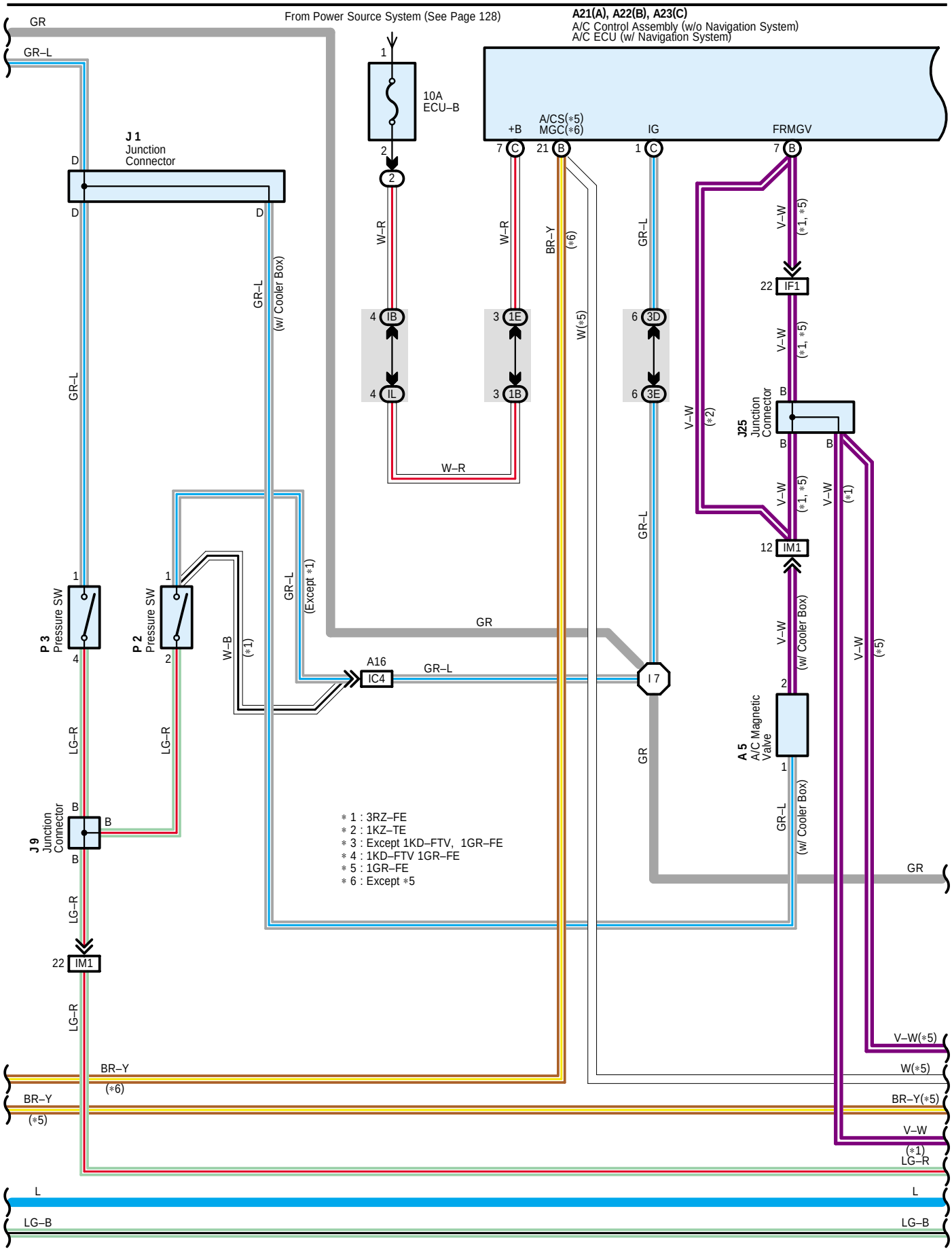
From Power Source System (See Page 128)
A21(A), A22(B), A23(C)
A/C Control Assembly (w/o Navigation System)
A/C ECU (w/ Navigation System)
10A
ECU–B
+B
A/CS(*5)
MGC(*6)
IG
FRMGV
J 1
Junction
Connector
P 3
Pressure SW
P 2
Pressure SW
J 9
Junction
Connector
J25
Junction
Connector
A 5
A/C Magnetic
Valve
A16
IC4
IF1
IM1
1B
1E
3D
3E
IB
IL
I 7
GR
GR–L
W–R
BR–Y
V–W
LG–R
W–B
L
LG–B
(w/ Cooler Box)
(Except *1)
(*1, *5)
(*2)
(*5)
(*6)
W(*5)
V–W(*5)
BR–Y(*5)
* 1 : 3RZ–FE
* 2 : 1KZ–TE
* 3 : Except 1KD–FTV, 1GR–FE
* 4 : 1KD–FTV 1GR–FE
* 5 : 1GR–FE
* 6 : Except *5

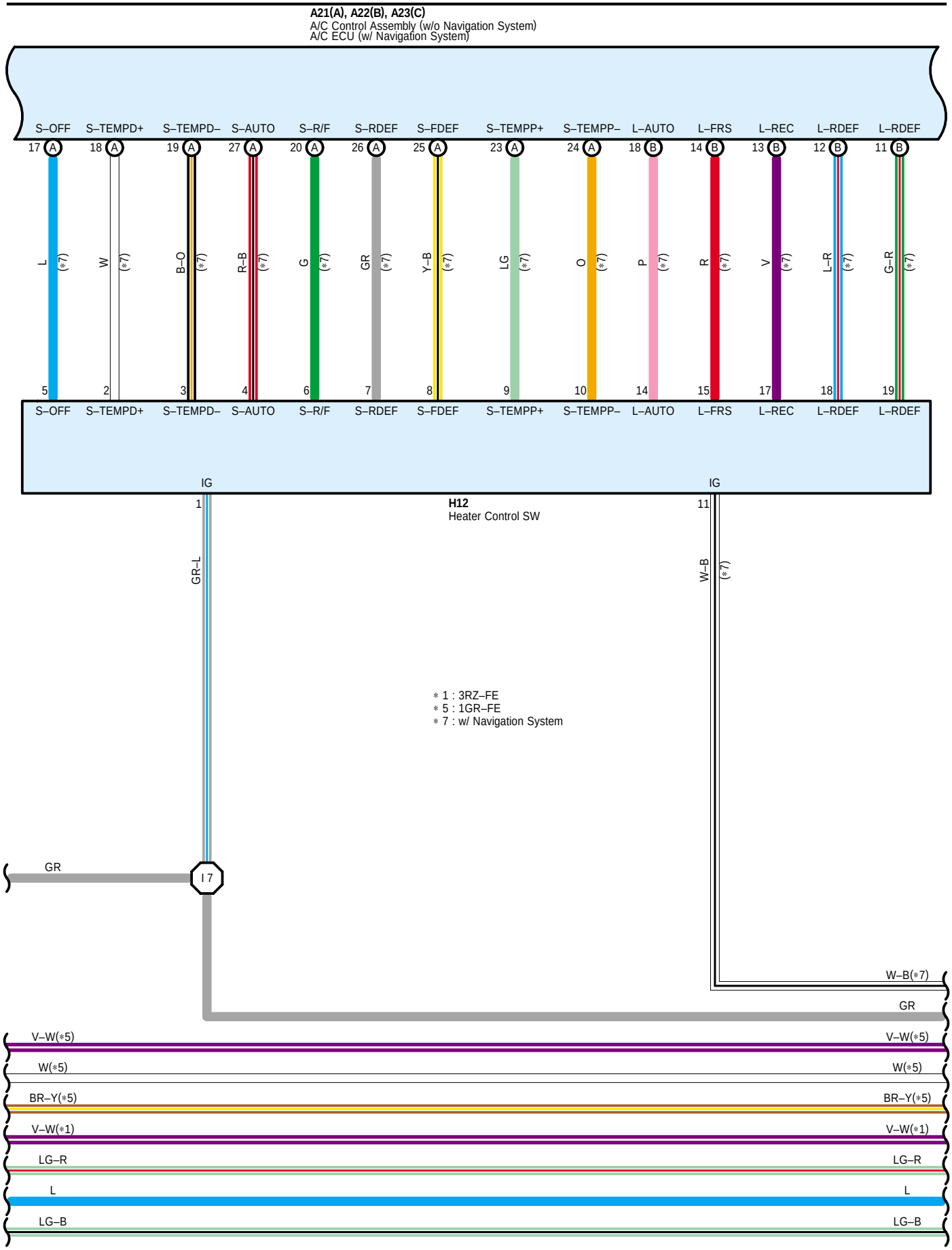
A21(A), A22(B), A23(C)
A/C Control Assembly (w/o Navigation System)
A/C ECU (w/ Navigation System)
S–OFF
S–TEMPD+
S–TEMPD–
S–AUTO
S–R/F
S–RDEF
S–FDEF
S–TEMPP+
S–TEMPP–
L–AUTO
L–FRS
L–REC
L–RDEF
L–RDEF
17 A
18 A
19 A
27 A
20 A
26 A
25 A
23 A
24 A
18 B
14 B
13 B
12 B
11 B
L (*7)
W (*7)
B–O (*7)
R–B (*7)
G (*7)
GR (*7)
Y–B (*7)
LG (*7)
O (*7)
P (*7)
R (*7)
V (*7)
L–R (*7)
G–R (*7)
5
2
3
4
6
7
8
9
10
14
15
17
18
19
IG
IG
1
11
H12
Heater Control SW
GR–L
W–B (*7)
* 1 : 3RZ–FE
* 5 : 1GR–FE
* 7 : w/ Navigation System
GR
I 7
W–B(*7)
GR
V–W(*5)
W(*5)
BR–Y(*5)
V–W(*1)
LG–R
L
LG–B

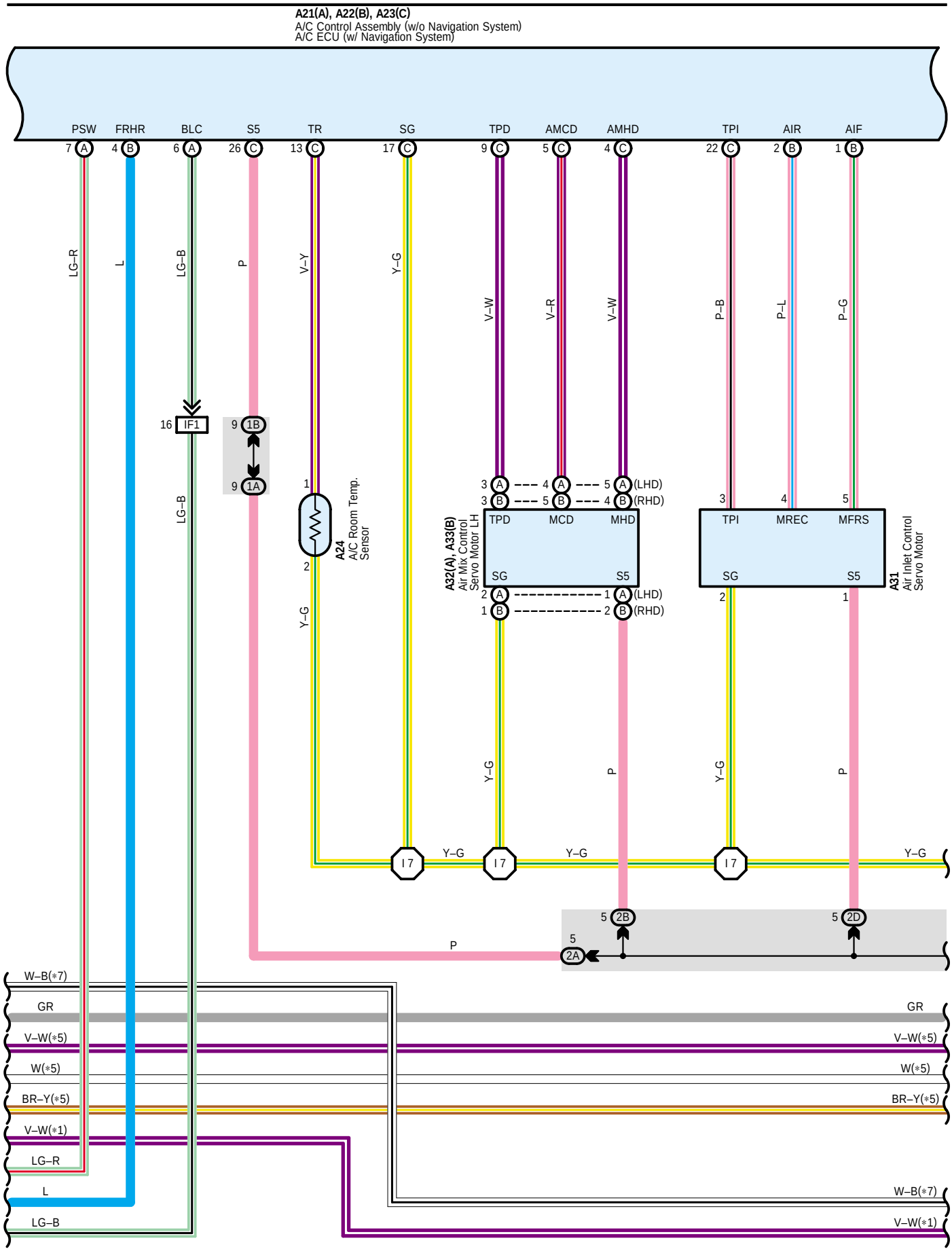
A21(A), A22(B), A23(C)
A/C Control Assembly (w/o Navigation System)
A/C ECU (w/ Navigation System)
PSW
FRHR
BLC
S5
TR
SG
TPD
AMCD
AMHD
TPI
AIR
AIF
LG–R
L
LG–B
P
V–Y
Y–G
V–W
V–R
P–B
P–L
P–G
IF1
A24
A/C Room Temp. Sensor
A32(A), A33(B)
Air Mix Control Servo Motor LH
TPD
MCD
MHD
SG
S5
(LHD)
(RHD)
A31
Air Inlet Control Servo Motor
TPI
MREC
MFRS
W–B(∗7)
GR
V–W(∗5)
W(∗5)
BR–Y(∗5)
V–W(∗1)

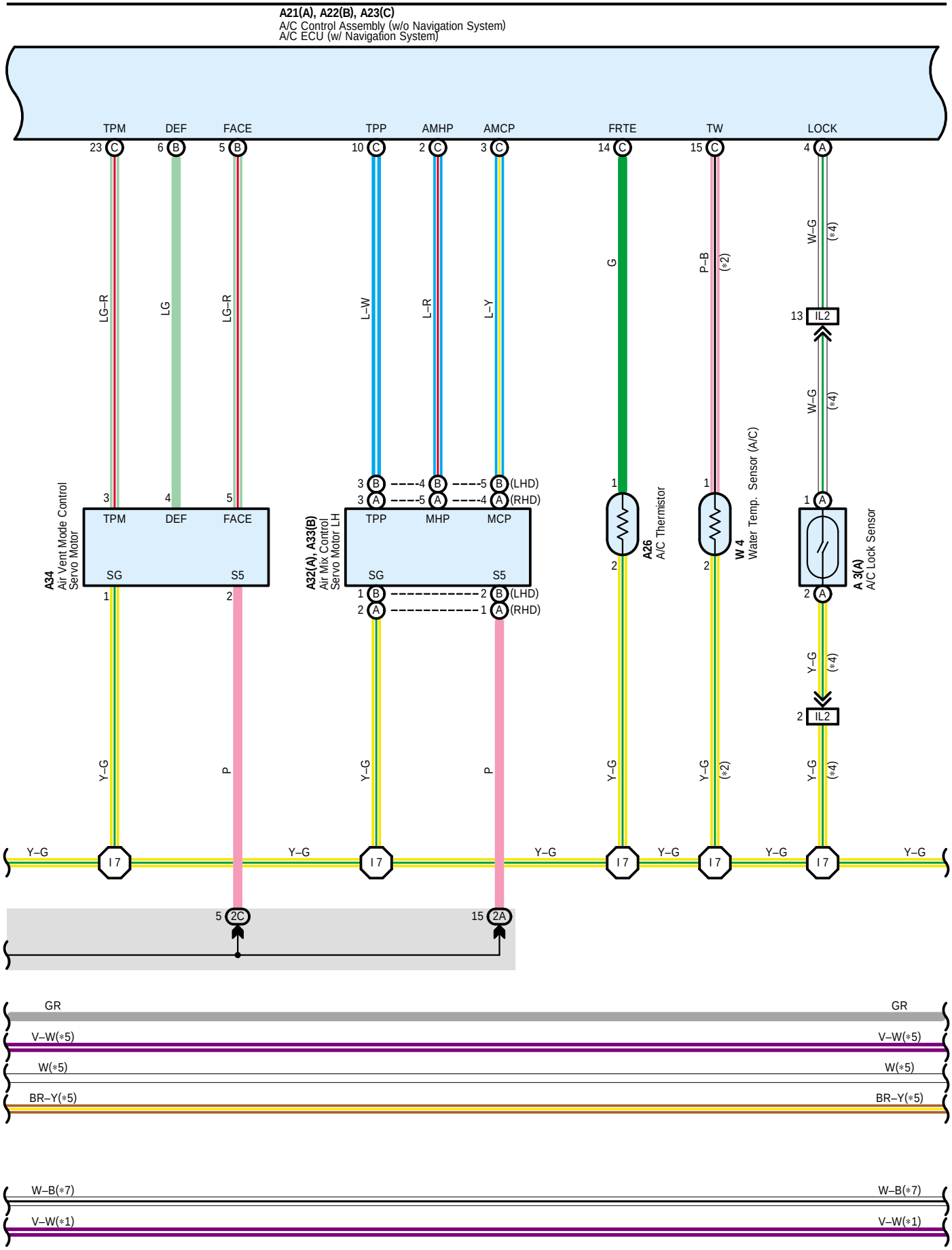
A21(A), A22(B), A23(C)
A/C Control Assembly (w/o Navigation System)
A/C ECU (w/ Navigation System)
TPM
DEF
FACE
TPP
AMHP
AMCP
FRTE
TW
LOCK
LG–R
LG
L–W
L–R
L–Y
G
P–B
W–G
Y–G
P
A34
Air Vent Mode Control Servo Motor
SG
S5
A32(A), A33(B)
Air Mix Control Servo Motor LH
MHP
MCP
(LHD)
(RHD)
A26
A/C Thermistor
W 4
Water Temp. Sensor (A/C)
A 3(A)
A/C Lock Sensor
IL2
I 7
2C
2A
GR
V–W(*5)
W(*5)
BR–Y(*5)
W–B(*7)
V–W(*1)

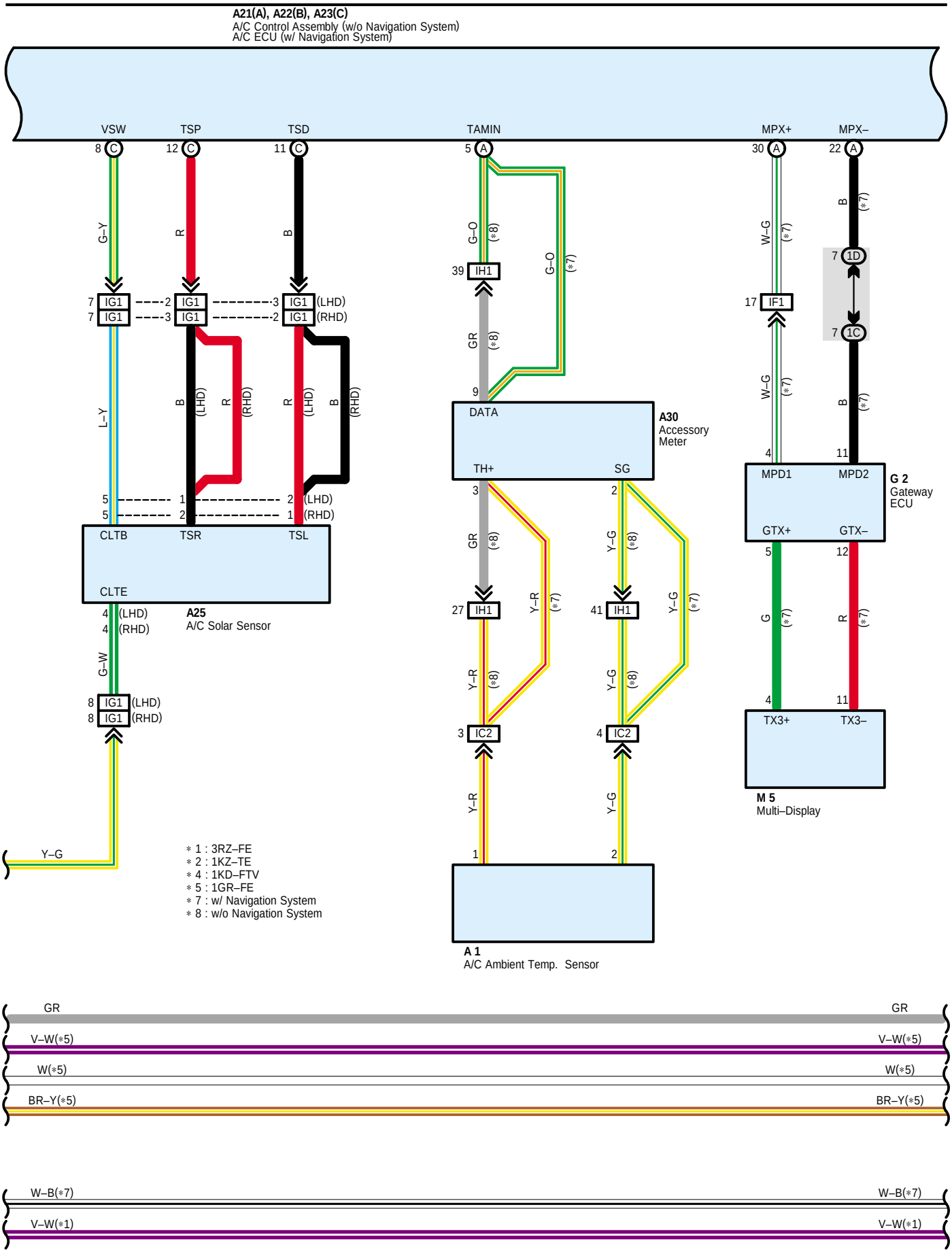
A21(A), A22(B), A23(C)
A/C Control Assembly (w/o Navigation System)
A/C ECU (w/ Navigation System)
VSW
TSP
TSD
TAMIN
MPX+
MPX–
A25
A/C Solar Sensor
CLTB
TSR
TSL
CLTE
A30
Accessory Meter
DATA
TH+
SG
G 2
Gateway ECU
MPD1
MPD2
GTX+
GTX–
M 5
Multi–Display
TX3+
TX3–
A 1
A/C Ambient Temp. Sensor
* 1 : 3RZ–FE
* 2 : 1KZ–TE
* 4 : 1KD–FTV
* 5 : 1GR–FE
* 7 : w/ Navigation System
* 8 : w/o Navigation System
GR
V–W(*5)
W(*5)
BR–Y(*5)
W–B(*7)
V–W(*1)

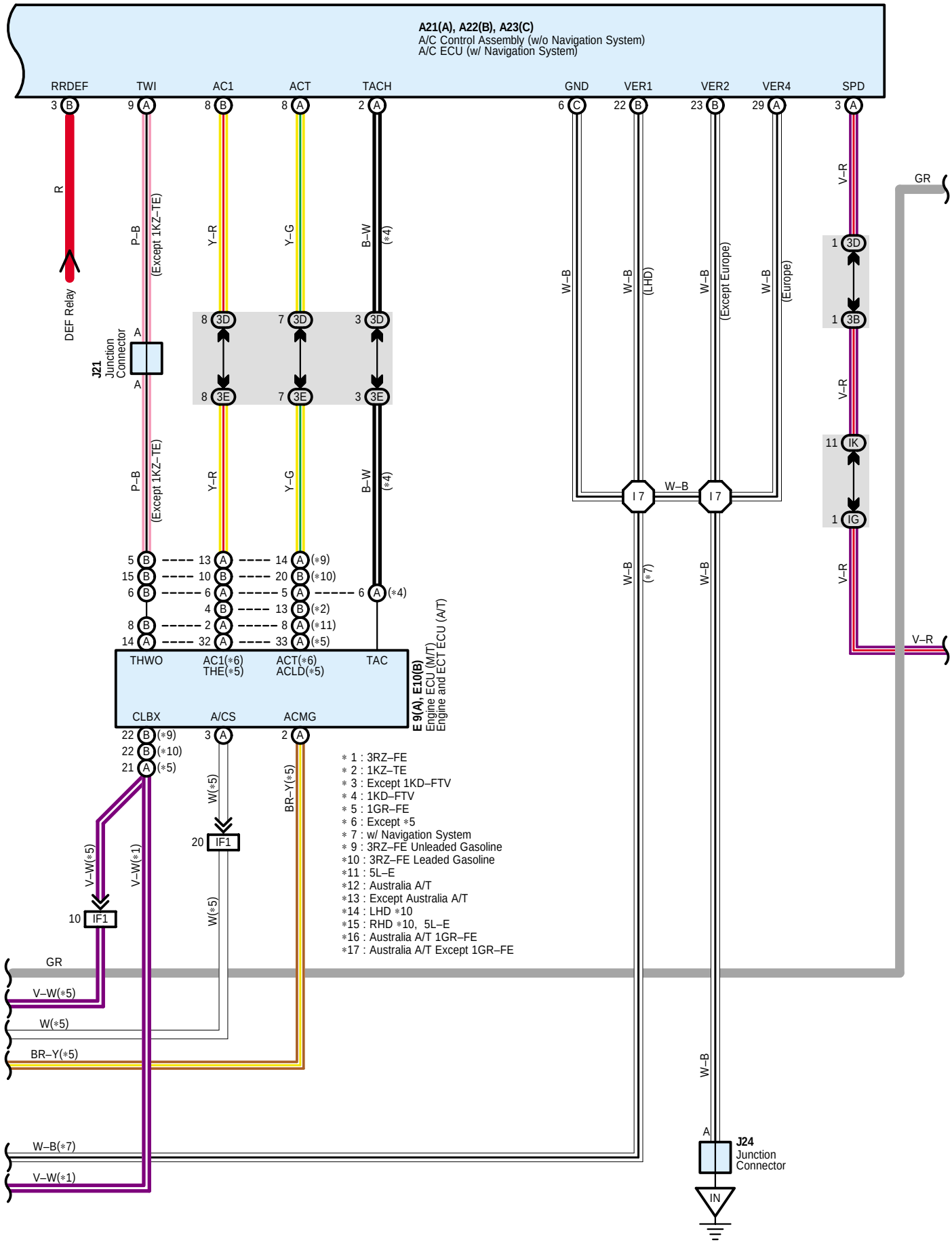
A21(A), A22(B), A23(C)
A/C Control Assembly (w/o Navigation System)
A/C ECU (w/ Navigation System)
RRDEF
TWI
AC1
ACT
TACH
GND
VER1
VER2
VER4
SPD
DEF Relay
J21 Junction Connector
E 9(A), E10(B)
Engine ECU (M/T)
Engine and ECT ECU (A/T)
THWO
AC1(*6)
THE(*5)
ACT(*6)
ACLD(*5)
TAC
CLBX
A/CS
ACMG
IF1
J24 Junction Connector
GR
V–W(*5)
W(*5)
BR–Y(*5)
W–B(*7)
V–W(*1)
* 1 : 3RZ–FE
* 2 : 1KZ–TE
* 3 : Except 1KD–FTV
* 4 : 1KD–FTV
* 5 : 1GR–FE
* 6 : Except *5
* 7 : w/ Navigation System
* 9 : 3RZ–FE Unleaded Gasoline
*10 : 3RZ–FE Leaded Gasoline
*11 : 5L–E
*12 : Australia A/T
*13 : Except Australia A/T
*14 : LHD *10
*15 : RHD *10, 5L–E
*16 : Australia A/T 1GR–FE
*17 : Australia A/T Except 1GR–FE

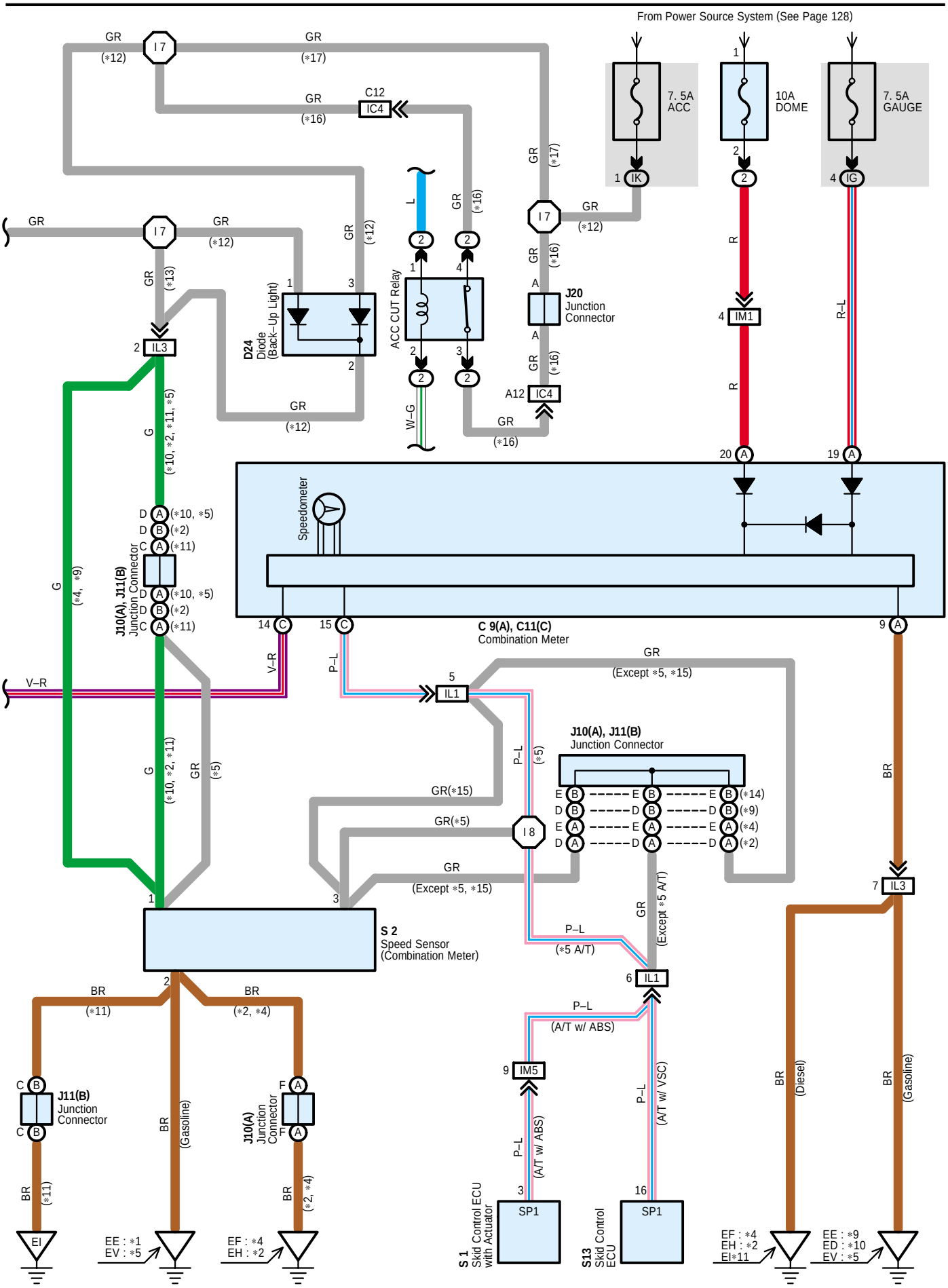
From Power Source System (See Page 128)
7. 5A ACC
10A DOME
7. 5A GAUGE
ACC CUT Relay
D24 Diode (Back–Up Light)
J20 Junction Connector
IL3
IM1
IC4
C12
Speedometer
C 9(A), C11(C) Combination Meter
J10(A), J11(B) Junction Connector
IL1
I7
I8
S 2 Speed Sensor (Combination Meter)
J11(B) Junction Connector
J10(A) Junction Connector
IM5
S 1 Skid Control ECU with Actuator
S13 Skid Control ECU
SP1
EI
EE : *1
EV : *5
EF : *4
EH : *2
EE : *9
ED : *10
EV : *5
EI*11
(Except *5, *15)
(Except *5 A/T)
(A/T w/ ABS)
(A/T w/ VSC)
(Diesel)
(Gasoline)

System Outline

1. Heater Blower Operation

Manual operation

When the blower speed is set to a certain level using the blower control SW, the A/C control assembly sends the signals to the blower control to control the blower motor speed.

Auto operation

When the auto SW is pushed, the A/C control assembly sends the signals from various sensors and temperature SW to the blower control to automatically control the blower motor speed.

2. Air Inlet Control Servo Motor Control

When the FRESH/RECIRC select SW is set to RECIRC, the motor in the air inlet control servo motor starts rotating to move the damper toward the RECIRC side. Since the damper position is detected by the TERMINAL TPI of the A/C control assembly, the motor is continuously rotated until the damper reaches its stop position. When the FRESH/RECIRC select SW is set to FRESH, the motor in the air inlet control servo motor starts rotating to move the damper toward the FRESH side. Since the damper position is detected by the TERMINAL TPI of the A/C control assembly, the motor is continuously rotated until the damper reaches its stop position.

3. Air Vent Mode Control Servo Motor Control

When the mode select SW is pushed, the ECU in the A/C control assembly activates the air vent mode control servo motor. This causes the servo motor to rotate to the position (FACE, BI-LEVEL, FOOT, FOOT/DEF, DEF) selected using the mode select SW, and moves the damper.

4. Air Mix Control Servo Motor Control

When the temperature control SW on the driver's side is pressed, the ECU in the A/C control assembly sends a signal to the air mix control servo motor on the driver's side. This signal drives the motor to reach the temperature set by the temperature control SW on the driver's side, and moves the damper. Passenger's side is operated as same as the driver's side.

5. Air Conditioning Operation

The A/C control assembly receives various signals, I.E., the engine RPM from the engine and ECT ECU (A/T), engine ECU (M/T), out side air temperature signal from the A/C ambient temp. sensor and coolant temperature from the engine and ECT ECU (A/T), engine ECU (M/T), etc.

When the engine is started and the A/C SW (A/C control assembly) is on, a signal is input to the A/C control assembly.

As a result, the ground circuit in A/C control assembly is closed and current flows from IG1 fuse to TERMINAL 1 of the MG CLT relay to TERMINAL 2 to TERMINAL MGC of the A/C control assembly to GROUND, turning the MG CLT relay on, so that the magnetic clutch is on and the A/C compressor operates.

If the A/C control assembly detects the following conditions, it stops the air conditioning:

* Evaporator outlet air is too low.
* There is a marked difference between the compressor speed and the engine speed.
* The refrigerant pressure is abnormally high or abnormally low.
* The engine speed is too low.
* Rapid acceleration occurs.

Service Hints

P2 Pressure SW

1-2 : Open with the refrigerant pressure at less than approx. 216 kpa (2.2 kgf/cm^2, 31 psi) or more than approx. 3138 kpa (32 kgf/cm^2, 455 psi)

A21 (A), A22 (B), A23 (C) A/C Control Assembly (w/o Navigation System), A/C ECU (w/ Navigation System)

(C) 7-Ground : Always approx. 12 volts
(C) 1-Ground : Approx. 12 volts with ignition SW at ON or ST position
(B) 22, (B) 23, (C) 6, (A) 29-Ground : Always continuity

* 1 : LHD 1GR-FE * 2 : LHD 3RZ-FE * 3 : LHD 1KD-FTV * 4 : LHD 1KZ-TE * 5 : LHD 5L-E * 6 : LHD 5-Door * 7 : LHD 3-Door
* 8 : LHD 8Way Power Seat * 9 : LHD Except 8Way Power Seat * 10 : RHD 1GR-FE * 11 : RHD 3RZ-FE * 12 : RHD 1KD-FTV
* 13 : RHD 1KZ-TE * 14 : RHD 5L-E * 15 : RHD 5-Door * 16 : RHD 3-Door * 17 : RHD 8Way Power Seat
* 18 : RHD Except 8Way Power Seat

○ : **Parts Location**

Code		See Page
A1		38 (*1)
		40 (*2)
		42 (*3)
		44 (*4)
		46 (*5)
		58 (*10)
		60 (*11)
		62 (*12)
		64 (*13)
		66 (*14)
A3	A	38 (*1)
		42 (*3)
		58 (*10)
		62 (*12)
A4	B	40 (*2)
		44 (*4)
		46 (*5)
		60 (*11)
		64 (*13)
		66 (*14)
A5		38 (*1)
		40 (*2)
		42 (*3)
		44 (*4)
		58 (*10)
		60 (*11)
		62 (*12)
		64 (*13)
A21	A	48 (LHD)
		68 (RHD)
A22	B	48 (LHD)
		68 (RHD)
A23	C	48 (LHD)
		68 (RHD)
A24		48 (LHD)
		68 (RHD)
A25		48 (LHD)
		68 (RHD)
A26		48 (LHD)
		68 (RHD)
A30		48 (LHD)
		68 (RHD)
A31		48 (LHD)
		68 (RHD)
A32	A	48 (LHD)
		68 (RHD)
A33	B	48 (LHD)
		68 (RHD)
A34		48 (LHD)
		68 (RHD)
B4		48 (LHD)
		68 (RHD)

Code		See Page
C9	A	49 (LHD)
		69 (RHD)
C11	C	49 (LHD)
		69 (RHD)
D24		69 (RHD)
E9	A	49 (LHD)
		69 (RHD)
E10	B	49 (LHD)
		69 (RHD)
F12		49 (LHD)
		69 (RHD)
G2		49 (LHD)
		69 (RHD)
H12		50 (LHD)
		70 (RHD)
J1		39 (*1)
		41 (*2)
		43 (*3)
		45 (*4)
		47 (*5)
		59 (*10)
		61 (*11)
		63 (*12)
		65 (*13)
		67 (*14)
J2	A	39 (*1)
		41 (*2)
		43 (*3)
		45 (*4)
		47 (*5)
		59 (*10)
		61 (*11)
		63 (*12)
		65 (*13)
		67 (*14)
J3	B	39 (*1)
		41 (*2)
		43 (*3)
		45 (*4)
		47 (*5)
		59 (*10)
		61 (*11)
		63 (*12)
		65 (*13)
		67 (*14)
J9		50 (LHD)
		70 (RHD)
J10	A	50 (LHD)
		70 (RHD)
J11	B	50 (LHD)
		70 (RHD)
J20		50 (LHD)

Code	See Page
J20	70 (RHD)
J21	50 (LHD)
	70 (RHD)
J24	50 (LHD)
	70 (RHD)
J25	50 (LHD)
	70 (RHD)
M5	50 (LHD)
	70 (RHD)
P2	39 (*1)
	41 (*2)
	43 (*3)
	45 (*4)
	47 (*5)
	59 (*10)
	61 (*11)
	63 (*12)
	65 (*13)
	67 (*14)
P3	39 (*1)
	41 (*2)
	43 (*3)
	45 (*4)
	47 (*5)
	59 (*10)
	61 (*11)
	63 (*12)
	65 (*13)
	67 (*14)
S1	39 (*1)
	41 (*2)
	43 (*3)
	45 (*4)
	59 (*10)
	61 (*11)
	63 (*12)
	65 (*13)
S2	39 (*1)
	41 (*2)
	43 (*3)
	45 (*4)
	47 (*5)
	59 (*10)
	61 (*11)
	63 (*12)
	65 (*13)
	67 (*14)
S13	51 (LHD)
	71 (RHD)
W4	51 (LHD)
	71 (RHD)

: **Relay Blocks**

Code	See Page	Relay Blocks (Relay Block Location)
2	23	Engine Room R/B (Engine Compartment Left)

: **Junction Block and Wire Harness Connector**

Code	See Page	Junction Block and Wire Harness (Connector Location)
IB	26 (LHD)	Engine Room Main Wire and Driver Side J/B (Lower Finish Panel)
	28 (RHD)	
IE	26 (LHD)	
	28 (RHD)	
IG	27 (LHD)	Instrument Panel Wire and Driver Side J/B (Lower Finish Panel)
	29 (RHD)	
IK	27 (LHD)	
	29 (RHD)	
IL	27 (LHD)	
	29 (RHD)	
1A	32 (LHD)	Instrument Panel Wire and J/B No.1 (Instrument Panel Reinforcement Left)
	32 (RHD)	Instrument Panel Wire and J/B No.1 (Instrument Panel Reinforcement Right)
1B	32 (LHD)	Instrument Panel Wire and J/B No.1 (Instrument Panel Reinforcement Left)
	32 (RHD)	Instrument Panel Wire and J/B No.1 (Instrument Panel Reinforcement Right)
1C	32 (LHD)	Instrument Panel Wire and J/B No.1 (Instrument Panel Reinforcement Left)
	32 (RHD)	Instrument Panel Wire and J/B No.1 (Instrument Panel Reinforcement Right)
1D	32 (LHD)	Instrument Panel Wire and J/B No.1 (Instrument Panel Reinforcement Left)
	32 (RHD)	Instrument Panel Wire and J/B No.1 (Instrument Panel Reinforcement Right)
1E	32 (LHD)	Instrument Panel Wire and J/B No.1 (Instrument Panel Reinforcement Left)
	32 (RHD)	Instrument Panel Wire and J/B No.1 (Instrument Panel Reinforcement Right)
2A	34	Instrument Panel Wire and J/B No.2 (Instrument Panel Reinforcement Center)
2B		
2C		
2D		
3B	36 (LHD)	Instrument Panel Wire and J/B No.3 (Instrument Panel Reinforcement Right)
	36 (RHD)	Instrument Panel Wire and J/B No.3 (Instrument Panel Reinforcement Left)
3D	36 (LHD)	Instrument Panel Wire and J/B No.3 (Instrument Panel Reinforcement Right)
	36 (RHD)	Instrument Panel Wire and J/B No.3 (Instrument Panel Reinforcement Left)
3E	36 (LHD)	Instrument Panel Wire and J/B No.3 (Instrument Panel Reinforcement Right)
	36 (RHD)	Instrument Panel Wire and J/B No.3 (Instrument Panel Reinforcement Left)

: Connector Joining Wire Harness and Wire Harness

Code	See Page	Joining Wire Harness and Wire Harness (Connector Location)
IC2	88 (LHD)	Instrument Panel Wire and Engine Room Main Wire (Left Kick Panel)
	112 (RHD)	
IC3	88 (LHD)	
	112 (RHD)	
IC4	88 (LHD)	
	112 (RHD)	
IF1	90 (LHD)	Instrument Panel Wire and Instrument Panel Wire (Near the J/B No.1)
	114 (RHD)	
IG1	90 (LHD)	Instrument Panel No.3 Wire and Instrument Panel Wire (Near the Combination Meter)
	114 (RHD)	
IH1	90 (LHD)	Instrument Panel Wire and Instrument Panel No.2 Wire (Instrument Panel Brace LH)
	114 (RHD)	
IL1	92 (LHD)	Engine Wire and Instrument Panel Wire (Right Side of the Blower Unit)
	116 (RHD)	Engine Wire and Instrument Panel Wire (Left Side of the Blower Unit)
IL2	92 (LHD)	Engine Wire and Instrument Panel Wire (Right Side of the Blower Unit)
	116 (RHD)	Engine Wire and Instrument Panel Wire (Left Side of the Blower Unit)
IL3	92 (LHD)	Engine Wire and Instrument Panel Wire (Right Side of the Blower Unit)
	116 (RHD)	Engine Wire and Instrument Panel Wire (Left Side of the Blower Unit)
IM1	92 (LHD)	Instrument Panel Wire and Engine Room Main Wire (Right Kick Panel)
	116 (RHD)	
IM2	92 (LHD)	
IM5	92 (LHD)	
	116 (RHD)	

▽ : **Ground Points**

Code	See Page	Ground Points Location
EB	78 (*1)	Front Left Fender
	80 (*2)	
	82 (*3)	
	84 (*4)	
	86 (*5)	
	102 (*10)	
	104 (*11)	
	106 (*12)	
	108 (*13)	
	110 (*14)	
ED	80 (*2)	Ignition Coil Bracket
	104 (*11)	
EE	80 (*2)	Intake Manifold
	104 (*11)	
EF	82 (*3)	Rear Part of Cylinder Block
	106 (*12)	
EH	84 (*4)	
	108 (*13)	
EI	86 (*5)	
	110 (*14)	
EV	78 (*1)	Rear Side of Left Bank Cylinder Block
	102 (*10)	
IN	88 (LHD)	Right Kick Panel
	112 (RHD)	Left Kick Panel

◯ : **Splice Points**

Code	See Page	Wire Harness with Splice Points	Code	See Page	Wire Harness with Splice Points
I7	90 (LHD)	Instrument Panel Wire	I8	90 (LHD)	Engine Wire
	114 (RHD)			114 (RHD)	

* 1 : LHD 1GR-FE * 2 : LHD 3RZ-FE * 3 : LHD 1KD-FTV * 4 : LHD 1KZ-TE * 5 : LHD 5L-E * 6 : LHD 5-Door * 7 : LHD 3-Door
* 8 : LHD 8Way Power Seat * 9 : LHD Except 8Way Power Seat * 10 : RHD 1GR-FE * 11 : RHD 3RZ-FE * 12 : RHD 1KD-FTV
* 13 : RHD 1KZ-TE * 14 : RHD 5L-E * 15 : RHD 5-Door * 16 : RHD 3-Door * 17 : RHD 8Way Power Seat
* 18 : RHD Except 8Way Power Seat

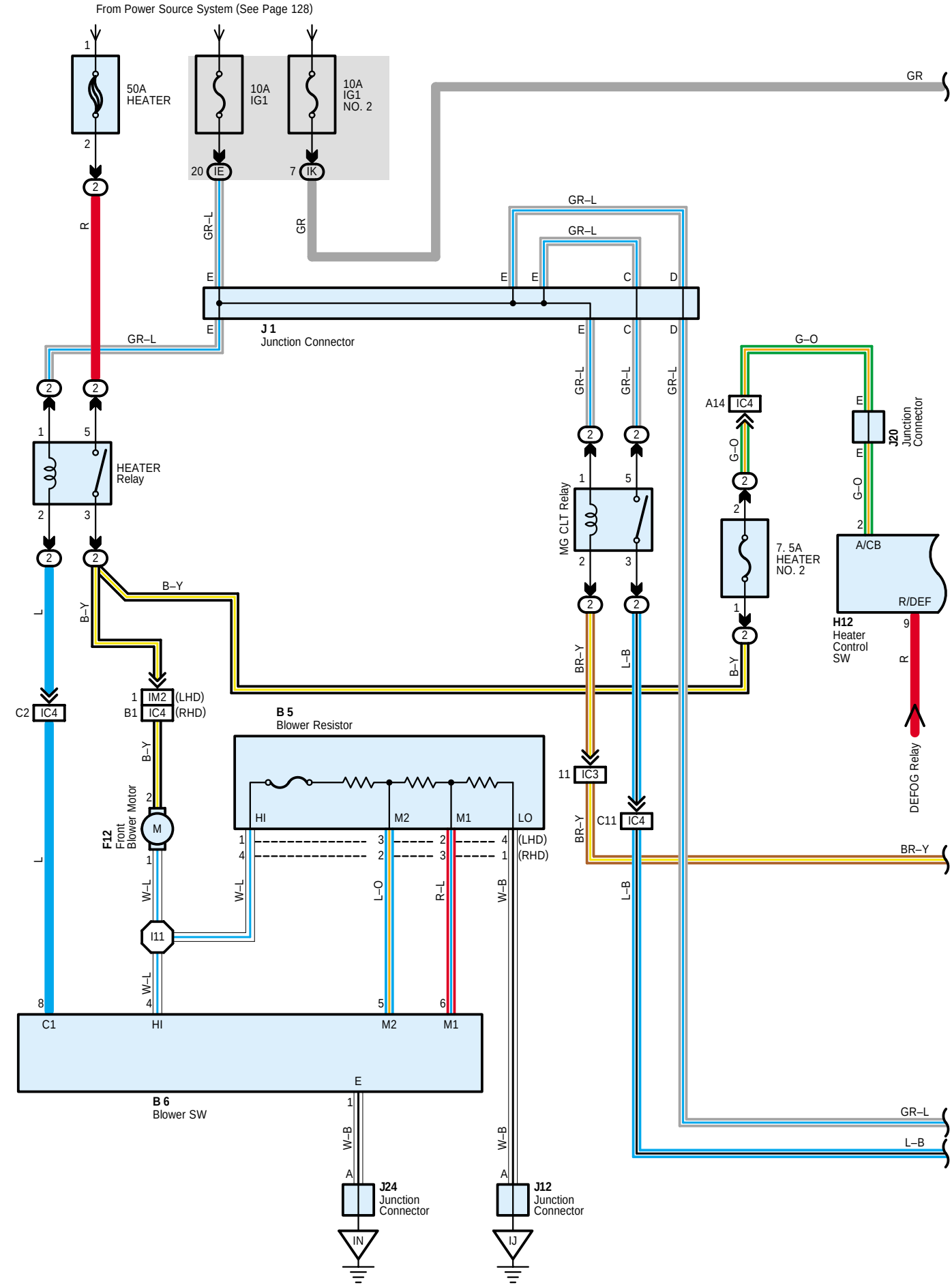
From Power Source System (See Page 128)
50A HEATER
10A IG1
10A IG1 NO. 2
20 IE
7 IK
GR
GR–L
R
J 1
Junction Connector
HEATER Relay
MG CLT Relay
A14 IC4
J20 Junction Connector
7. 5A HEATER NO. 2
A/CB
R/DEF
H12 Heater Control SW
DEFOG Relay
G–O
B–Y
L
C2 IC4
IM2 (LHD)
B1 IC4 (RHD)
B 5
Blower Resistor
HI
M2
M1
LO
(LHD)
(RHD)
F12 Front Blower Motor
M
I11
W–L
L–O
R–L
W–B
BR–Y
L–B
11 IC3
C11 IC4
C1
B 6
Blower SW
J24 Junction Connector
J12 Junction Connector
IN
IJ

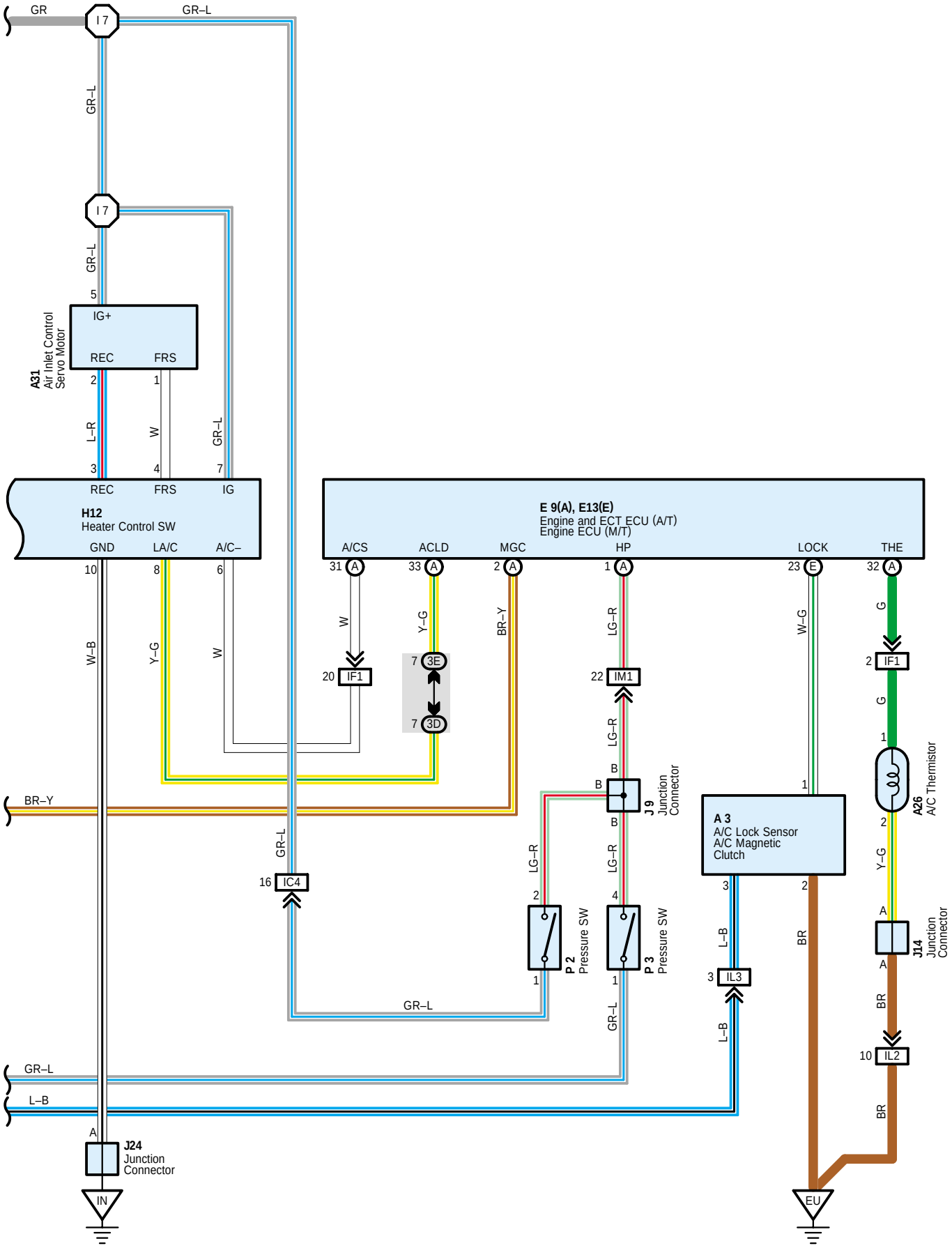
GR
I 7
GR–L
GR–L
I 7
GR–L
5
IG+
A31
Air Inlet Control
Servo Motor
REC
FRS
2
1
L–R
W
GR–L
3
4
7
REC
FRS
IG
H12
Heater Control SW
GND
LA/C
A/C–
10
8
6
W–B
Y–G
W
E 9(A), E13(E)
Engine and ECT ECU (A/T)
Engine ECU (M/T)
A/CS
ACLD
MGC
HP
LOCK
THE
31 A
33 A
2 A
1 A
23 E
32 A
W
Y–G
BR–Y
LG–R
W–G
G
20 IF1
7 3E
7 3D
22 IM1
2 IF1
G
1
A26
A/C Thermistor
LG–R
B
B
J 9
Junction
Connector
1
BR–Y
A 3
A/C Lock Sensor
A/C Magnetic
Clutch
GR–L
16 IC4
LG–R
LG–R
2
4
P 2
Pressure SW
P 3
Pressure SW
3
2
Y–G
A
J14
Junction
Connector
L–B
BR
3 IL3
1
1
GR–L
GR–L
L–B
A
BR
10 IL2
GR–L
L–B
BR
A
J24
Junction
Connector
IN
EU

System Outline

1. Heater Blower Motor Operation

∗ Low speed operation
When the blower SW is moved to LO position, current flows to TERMINAL C1 of the blower SW to GROUND, activating the HEATER relay. This causes the current to flow from the HEATER fuse to TERMINAL 5 of the HEATER relay to TERMINAL 3 to TERMINAL 2 of the front blower motor to TERMINAL 1 to TERMINAL 1 (LHD), 4 (RHD) of the blower resistor to TERMINAL 4 (LHD), 1 (RHD) to GROUND, causing the blower motor to rotate at low speed.

∗ Medium speed operation (Operation at M1, M2)
When the blower SW is moved to M1 position, current flows to TERMINAL C1 of the blower SW to GROUND, turning the HEATER relay to switch on. This causes the current to flow from the HEATER fuse to TERMINAL 5 of the HEATER relay to TERMINAL 3 to TERMINAL 2 of the front blower motor to TERMINAL 1 to TERMINAL 1 (LHD), 4 (RHD) of the blower resistor to TERMINAL 2 (LHD), 3 (RHD) to TERMINAL 6 of the blower SW to GROUND. At this time, the blower resistance of the blower resistor is less than at low speed, so the blower motor rotates at medium low speed.
When the blower SW is moved to M2 position, current flows through the motor flows from TERMINAL 1 (LHD), 4 (RHD) of the blower resistor to TERMINAL 3 (LHD), 2 (RHD) to TERMINAL 5 of the blower SW to GROUND. At this time, resistance of the blower resistor is less than at M1 position, so the blower motor rotates at medium high speed.

∗ High speed operation
When the blower SW is moved to HIGH position, current flows to TERMINAL C1 of the blower SW to GROUND, turning the HEATER relay to switch on.
This causes the current to flow from the HEATER fuse to TERMINAL 5 of the HEATER relay to TERMINAL 3 to TERMINAL 2 of the blower motor to TERMINAL 1 to TERMINAL 4 of the blower SW to GROUND, causing the blower motor to rotate at high speed.

Service Hints

HEATER Relay
5–3 : Closed with the ignition SW on and the blower SW on

MG CLT Relay
5–3 : Closed with the ignition SW on, the blower SW on and the A/C SW on

P2 Pressure SW
1–2 : Open with pressure 2.0 kgf/cm^2 (29 psi, 196 kpa) or above 32 kgf/cm^2 (464 psi, 3138 kpa)

○ : Parts Location

Code	See Page	Code	See Page	Code	See Page
A3	38 (*1)	E13 E	49 (LHD)	J14	50 (LHD)
	58 (*10)		69 (RHD)		70 (RHD)
A26	48 (LHD)	F12	49 (LHD)	J20	50 (LHD)
	68 (RHD)		69 (RHD)		70 (RHD)
A31	48 (LHD)	H12	50 (LHD)	J24	50 (LHD)
	68 (RHD)		70 (RHD)		70 (RHD)
B5	48 (LHD)	J1	39 (*1)	P2	39 (*1)
	68 (RHD)		59 (*10)		59 (*10)
B6	48 (LHD)	J9	50 (LHD)	P3	39 (*1)
	68 (RHD)		70 (RHD)		59 (*10)
E9 A	49 (LHD)	J12	50 (LHD)		
	69 (RHD)		70 (RHD)		

▭ : Relay Blocks

Code	See Page	Relay Blocks (Relay Block Location)
2	23	Engine Room R/B (Engine Compartment Left)

* 1 : LHD 1GR–FE * 2 : LHD 3RZ–FE * 3 : LHD 1KD–FTV * 4 : LHD 1KZ–TE * 5 : LHD 5L–E * 6 : LHD 5–Door * 7 : LHD 3–Door
* 8 : LHD 8Way Power Seat * 9 : LHD Except 8Way Power Seat * 10 : RHD 1GR–FE * 11 : RHD 3RZ–FE * 12 : RHD 1KD–FTV
* 13 : RHD 1KZ–TE * 14 : RHD 5L–E * 15 : RHD 5–Door * 16 : RHD 3–Door * 17 : RHD 8Way Power Seat
* 18 : RHD Except 8Way Power Seat

: **Junction Block and Wire Harness Connector**

Code	See Page	Junction Block and Wire Harness (Connector Location)
IE	26 (LHD)	Engine Room Main Wire and Driver Side J/B (Lower Finish Panel)
	28 (RHD)	
IK	27 (LHD)	Instrument Panel Wire and Driver Side J/B (Lower Finish Panel)
	29 (RHD)	
3D	36 (LHD)	Instrument Panel Wire and J/B No.3 (Instrument Panel Reinforcement Right)
	36 (RHD)	Instrument Panel Wire and J/B No.3 (Instrument Panel Reinforcement Left)
3E	36 (LHD)	Instrument Panel Wire and J/B No.3 (Instrument Panel Reinforcement Right)
	36 (RHD)	Instrument Panel Wire and J/B No.3 (Instrument Panel Reinforcement Left)

: **Connector Joining Wire Harness and Wire Harness**

Code	See Page	Joining Wire Harness and Wire Harness (Connector Location)
IC3	88 (LHD)	Instrument Panel Wire and Engine Room Main Wire (Left Kick Panel)
	112 (RHD)	
IC4	88 (LHD)	
	112 (RHD)	
IF1	90 (LHD)	Instrument Panel Wire and Instrument Panel Wire (Near the J/B No.1)
	114 (RHD)	
IL2	92 (LHD)	Engine Wire and Instrument Panel Wire (Right Side of the Blower Unit)
	116 (RHD)	Engine Wire and Instrument Panel Wire (Left Side of the Blower Unit)
IL3	92 (LHD)	Engine Wire and Instrument Panel Wire (Right Side of the Blower Unit)
	116 (RHD)	Engine Wire and Instrument Panel Wire (Left Side of the Blower Unit)
IM1	92 (LHD)	Instrument Panel Wire and Engine Room Main Wire (Right Kick Panel)
	116 (RHD)	
IM2	92 (LHD)	
	116 (RHD)	

: **Ground Points**

Code	See Page	Ground Points Location
EU	78 (*1)	Rear Side of Right Bank Cylinder Block
	102 (*10)	
IJ	88 (LHD)	Left Kick Panel
	112 (RHD)	Right Kick Panel
IN	88 (LHD)	Right Kick Panel
	112 (RHD)	Left Kick Panel

: **Splice Points**

Code	See Page	Wire Harness with Splice Points	Code	See Page	Wire Harness with Splice Points
I7	90 (LHD)	Instrument Panel Wire	I11	90 (LHD)	Instrument Panel Wire
	114 (RHD)			114 (RHD)	

* 1 : LHD 1GR-FE * 2 : LHD 3RZ-FE * 3 : LHD 1KD-FTV * 4 : LHD 1KZ-TE * 5 : LHD 5L-E * 6 : LHD 5-Door * 7 : LHD 3-Door
* 8 : LHD 8Way Power Seat * 9 : LHD Except 8Way Power Seat * 10 : RHD 1GR-FE * 11 : RHD 3RZ-FE * 12 : RHD 1KD-FTV
* 13 : RHD 1KZ-TE * 14 : RHD 5L-E * 15 : RHD 5-Door * 16 : RHD 3-Door * 17 : RHD 8Way Power Seat
* 18 : RHD Except 8Way Power Seat

Air Conditioner (Manual A/C Except 1GR-FE)

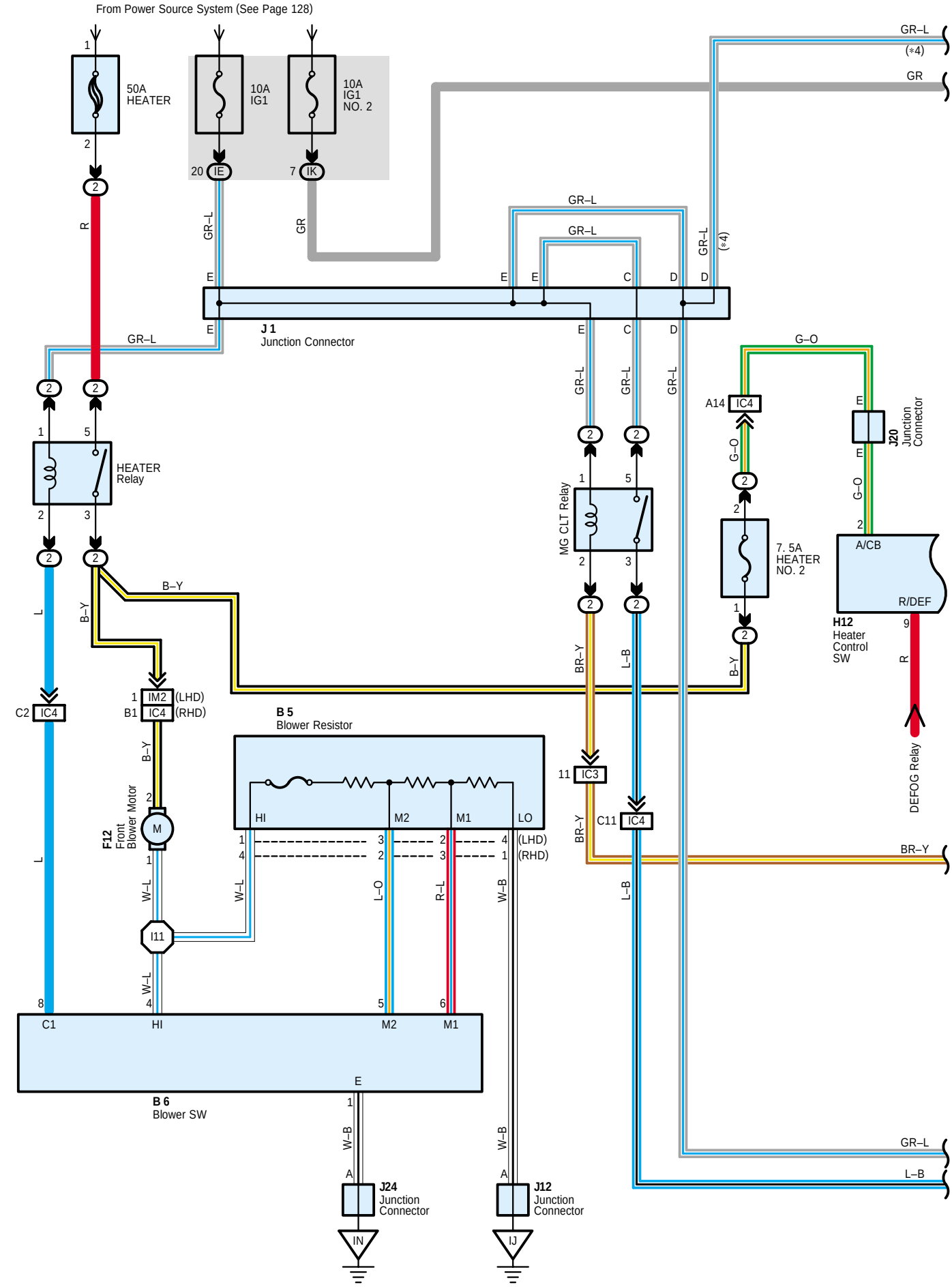

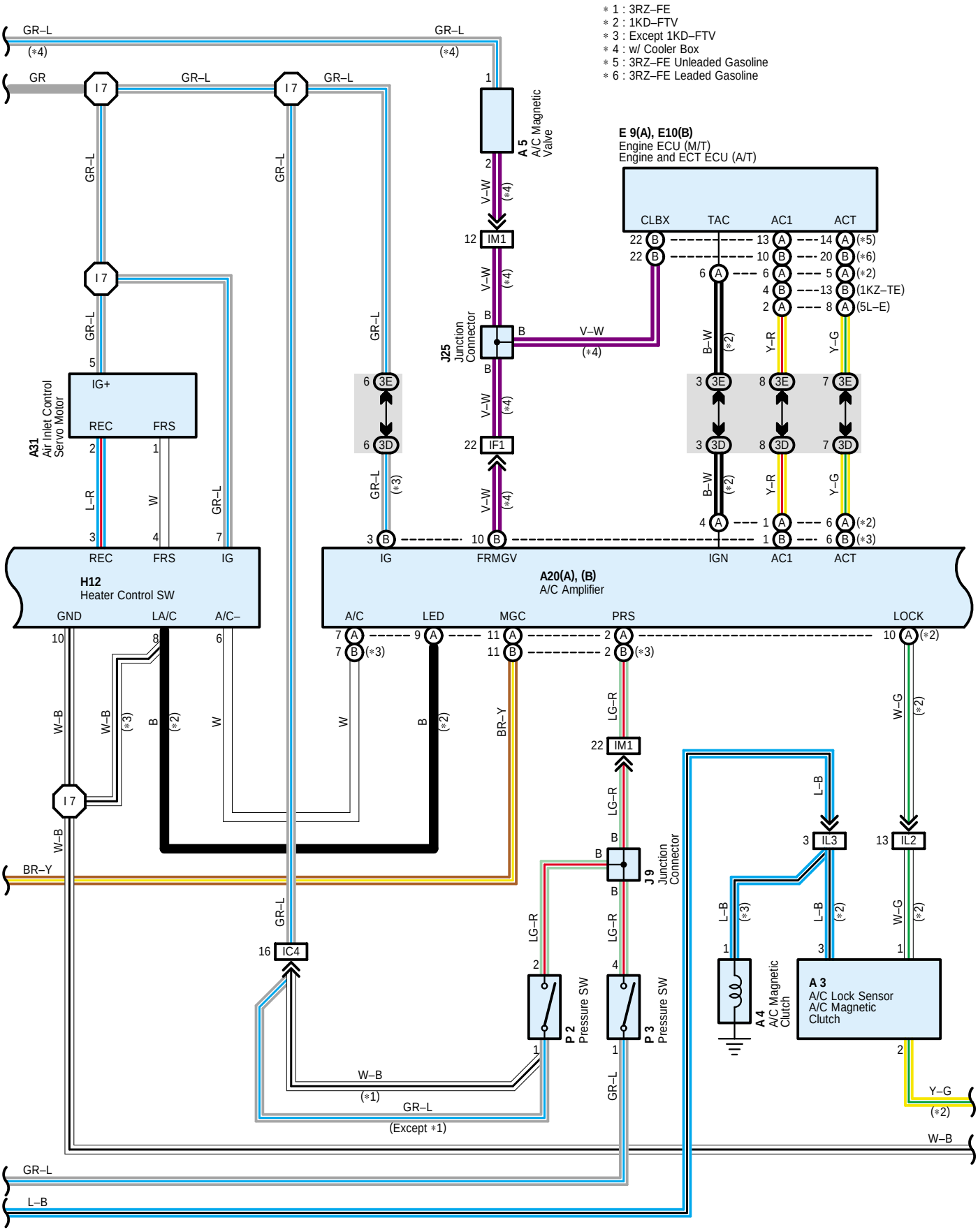
* 1 : 3RZ–FE
* 2 : 1KD–FTV
* 3 : Except 1KD–FTV
* 4 : w/ Cooler Box
* 5 : 3RZ–FE Unleaded Gasoline
* 6 : 3RZ–FE Leaded Gasoline
A 5
A/C Magnetic Valve
E 9(A), E10(B)
Engine ECU (M/T)
Engine and ECT ECU (A/T)
CLBX
TAC
AC1
ACT
J25
Junction Connector
A31
Air Inlet Control Servo Motor
IG+
REC
FRS
H12
Heater Control SW
GND
LA/C
A/C–
A20(A), (B)
A/C Amplifier
A/C
LED
MGC
PRS
LOCK
IG
FRMGV
IGN
J 9
Junction Connector
P 2
Pressure SW
P 3
Pressure SW
A 4
A/C Magnetic Clutch
A 3
A/C Lock Sensor
A/C Magnetic Clutch
(Except *1)

∗ 2 : 1KD–FTV
∗ 3 : Except 1KD–FTV

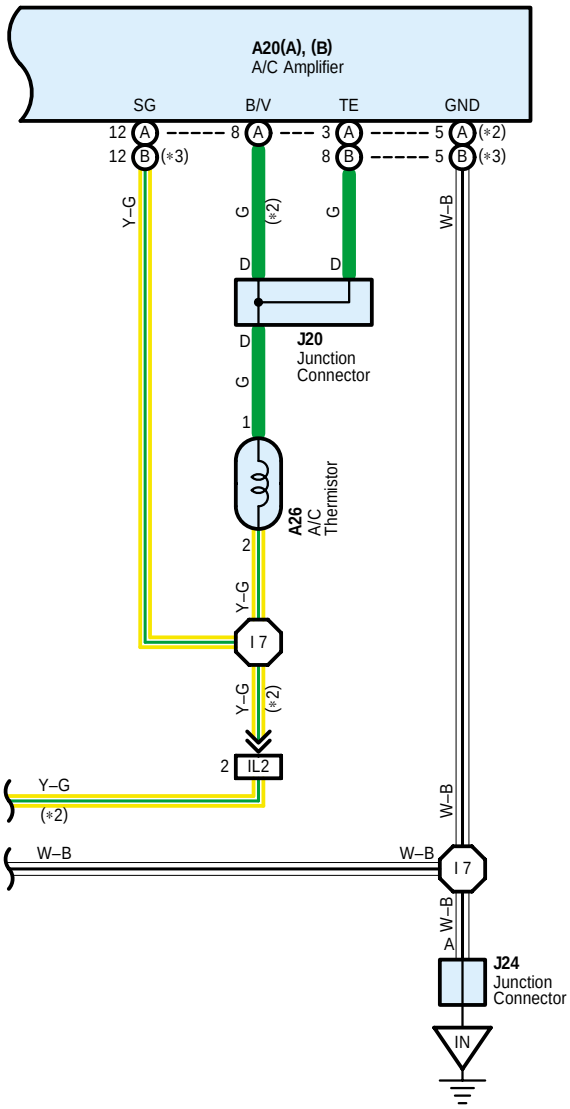

System Outline

1. Heater Blower Motor Operation

∗ Low speed operation
When the blower SW is moved to LO position, current flows to TERMINAL C1 of the blower SW to GROUND, activating the HEATER relay. This causes the current to flow from the HEATER fuse to TERMINAL 5 of the HEATER relay to TERMINAL 3 to TERMINAL 2 of the front blower motor to TERMINAL 1 to TERMINAL 1 (LHD), 4 (RHD) of the blower resistor to TERMINAL 4 (LHD), 1 (RHD) to GROUND, causing the blower motor to rotate at low speed.

∗ Medium speed operation (Operation at M1, M2)
When the blower SW is moved to M1 position, current flows to TERMINAL C1 of the blower SW to GROUND, turning the HEATER relay to switch on. This causes the current to flow from the HEATER fuse to TERMINAL 5 of the HEATER relay to TERMINAL 3 to TERMINAL 2 of the front blower motor to TERMINAL 1 to TERMINAL 1 (LHD), 4 (RHD) of the blower resistor to TERMINAL 2 (LHD), 3 (RHD) to TERMINAL 6 of the blower SW to GROUND. At this time, the blower resistance of the blower resistor is less than at low speed, so the blower motor rotates at medium low speed.
When the blower SW is moved to M2 position, current flows through the motor flows from TERMINAL 1 (LHD), 4 (RHD) of the blower resistor to TERMINAL 3 (LHD), 2 (RHD) to TERMINAL 5 of the blower SW to GROUND. At this time, resistance of the blower resistor is less than at M1 position, so the blower motor rotates at medium high speed.

∗ High speed operation
When the blower SW is moved to HIGH position, current flows to TERMINAL C1 of the blower SW to GROUND, turning the HEATER relay to switch on.
This causes the current to flow from the HEATER fuse to TERMINAL 5 of the HEATER relay to TERMINAL 3 to TERMINAL 2 of the blower motor to TERMINAL 1 to TERMINAL 4 of the blower SW to GROUND, causing the blower motor to rotate at high speed.

Service Hints

HEATER Relay
5–3 : Closed with the ignition SW on and the blower SW on

MG CLT Relay
5–3 : Closed with the ignition SW on, the blower SW on and the A/C SW on

P2 Pressure SW
1–2 : Open with pressure 2.0 kgf/cm^2 (29 psi, 196 kpa) or above 32 kgf/cm^2 (464 psi, 3138 kpa)

: Parts Location

Code	See Page	Code	See Page	Code	See Page
A3	42 (*3)	B5	68 (RHD)	J20	50 (LHD)
	62 (*12)	B6	48 (LHD)		70 (RHD)
A4	40 (*2)		68 (RHD)	J24	50 (LHD)
	44 (*4)	E9 A	49 (LHD)		70 (RHD)
	46 (*5)		69 (RHD)	J25	50 (LHD)
	60 (*11)	E10 B	49 (LHD)		70 (RHD)
	64 (*13)		69 (RHD)	P2	41 (*2)
	66 (*14)	F12	49 (LHD)		43 (*3)
A5	40 (*2)		69 (RHD)		45 (*4)
	42 (*3)	H12	50 (LHD)		47 (*5)
	44 (*4)		70 (RHD)		61 (*11)
	60 (*11)	J1	41 (*2)		63 (*12)
	62 (*12)		43 (*3)		65 (*13)
	64 (*13)		45 (*4)		67 (*14)
A20 A	48 (LHD)		47 (*5)	P3	41 (*2)
	68 (RHD)		61 (*11)		43 (*3)
A20 B	48 (LHD)		63 (*12)		45 (*4)
	68 (RHD)		65 (*13)		47 (*5)
A26	48 (LHD)		67 (*14)		61 (*11)
	68 (RHD)	J9	50 (LHD)		63 (*12)
A31	48 (LHD)		70 (RHD)		65 (*13)
	68 (RHD)	J12	50 (LHD)		67 (*14)
B5	48 (LHD)		70 (RHD)		

: Relay Blocks

Code	See Page	Relay Blocks (Relay Block Location)
2	23	Engine Room R/B (Engine Compartment Left)

: Junction Block and Wire Harness Connector

Code	See Page	Junction Block and Wire Harness (Connector Location)
IE	26 (LHD)	Engine Room Main Wire and Driver Side J/B (Lower Finish Panel)
	28 (RHD)	
IK	27 (LHD)	Instrument Panel Wire and Driver Side J/B (Lower Finish Panel)
	29 (RHD)	
3D	36 (LHD)	Instrument Panel Wire and J/B No.3 (Instrument Panel Reinforcement Right)
	36 (RHD)	Instrument Panel Wire and J/B No.3 (Instrument Panel Reinforcement Left)
3E	36 (LHD)	Instrument Panel Wire and J/B No.3 (Instrument Panel Reinforcement Right)
	36 (RHD)	Instrument Panel Wire and J/B No.3 (Instrument Panel Reinforcement Left)

* 1 : LHD 1GR-FE * 2 : LHD 3RZ-FE * 3 : LHD 1KD-FTV * 4 : LHD 1KZ-TE * 5 : LHD 5L-E * 6 : LHD 5-Door * 7 : LHD 3-Door
* 8 : LHD 8Way Power Seat * 9 : LHD Except 8Way Power Seat * 10 : RHD 1GR-FE * 11 : RHD 3RZ-FE * 12 : RHD 1KD-FTV
* 13 : RHD 1KZ-TE * 14 : RHD 5L-E * 15 : RHD 5-Door * 16 : RHD 3-Door * 17 : RHD 8Way Power Seat
* 18 : RHD Except 8Way Power Seat

: Connector Joining Wire Harness and Wire Harness

Code	See Page	Joining Wire Harness and Wire Harness (Connector Location)
IC3	88 (LHD)	Instrument Panel Wire and Engine Room Main Wire (Left Kick Panel)
	112 (RHD)	
IC4	88 (LHD)	
	112 (RHD)	
IF1	90 (LHD)	Instrument Panel Wire and Instrument Panel Wire (Near the J/B No.1)
	114 (RHD)	
IL2	92 (LHD)	Engine Wire and Instrument Panel Wire (Right Side of the Blower Unit)
	116 (RHD)	Engine Wire and Instrument Panel Wire (Left Side of the Blower Unit)
IL3	92 (LHD)	Engine Wire and Instrument Panel Wire (Right Side of the Blower Unit)
	116 (RHD)	Engine Wire and Instrument Panel Wire (Left Side of the Blower Unit)
IM1	92 (LHD)	Instrument Panel Wire and Engine Room Main Wire (Right Kick Panel)
	116 (RHD)	
IM2	92 (LHD)	
	116 (RHD)	

: Ground Points

Code	See Page	Ground Points Location
IJ	88 (LHD)	Left Kick Panel
	112 (RHD)	Right Kick Panel
IN	88 (LHD)	Right Kick Panel
	112 (RHD)	Left Kick Panel

: Splice Points

Code	See Page	Wire Harness with Splice Points	Code	See Page	Wire Harness with Splice Points
I7	90 (LHD)	Instrument Panel Wire	I11	90 (LHD)	Instrument Panel Wire
	114 (RHD)			114 (RHD)	

Rear Air Conditioner (Automatic A/C)

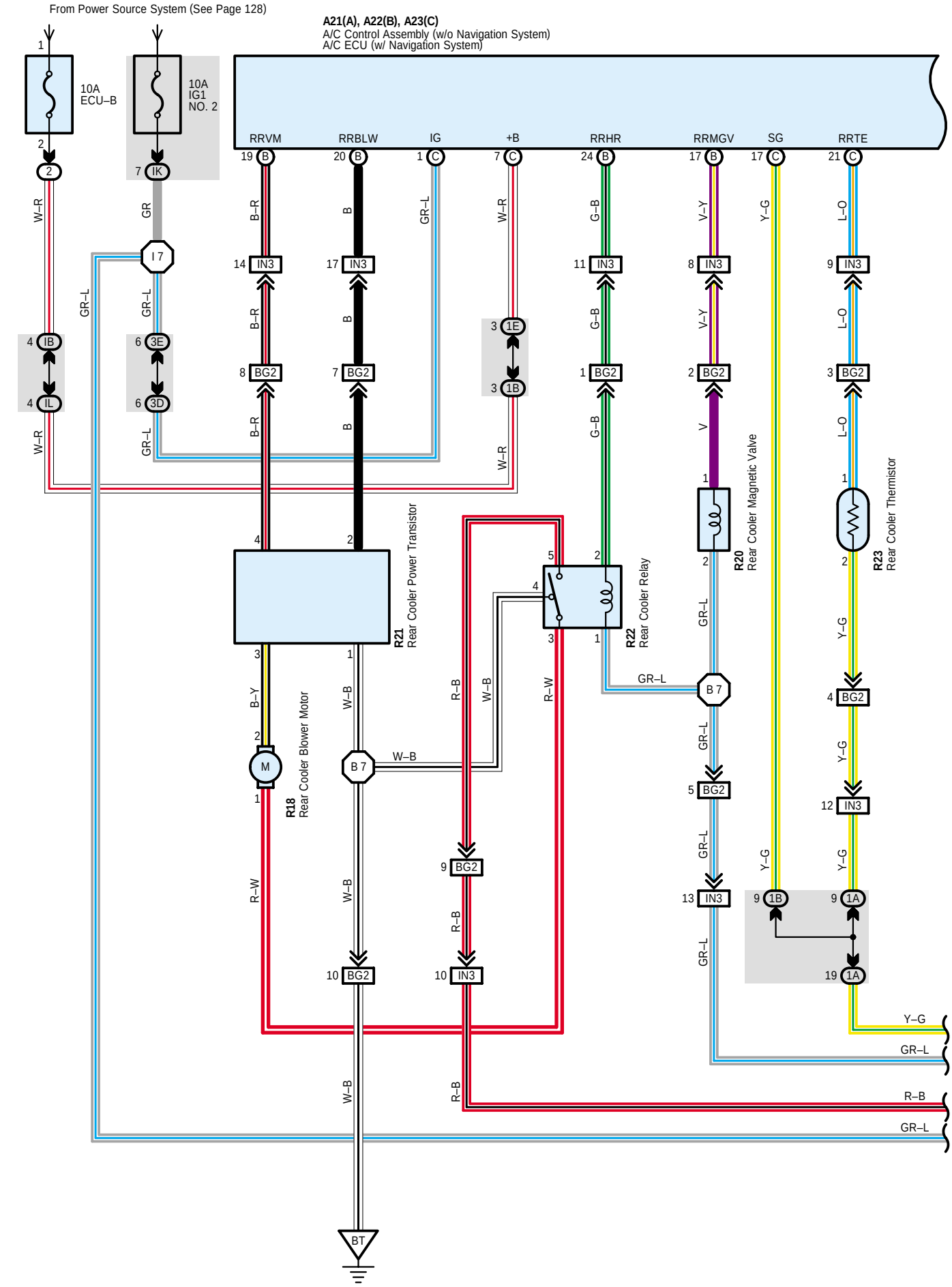

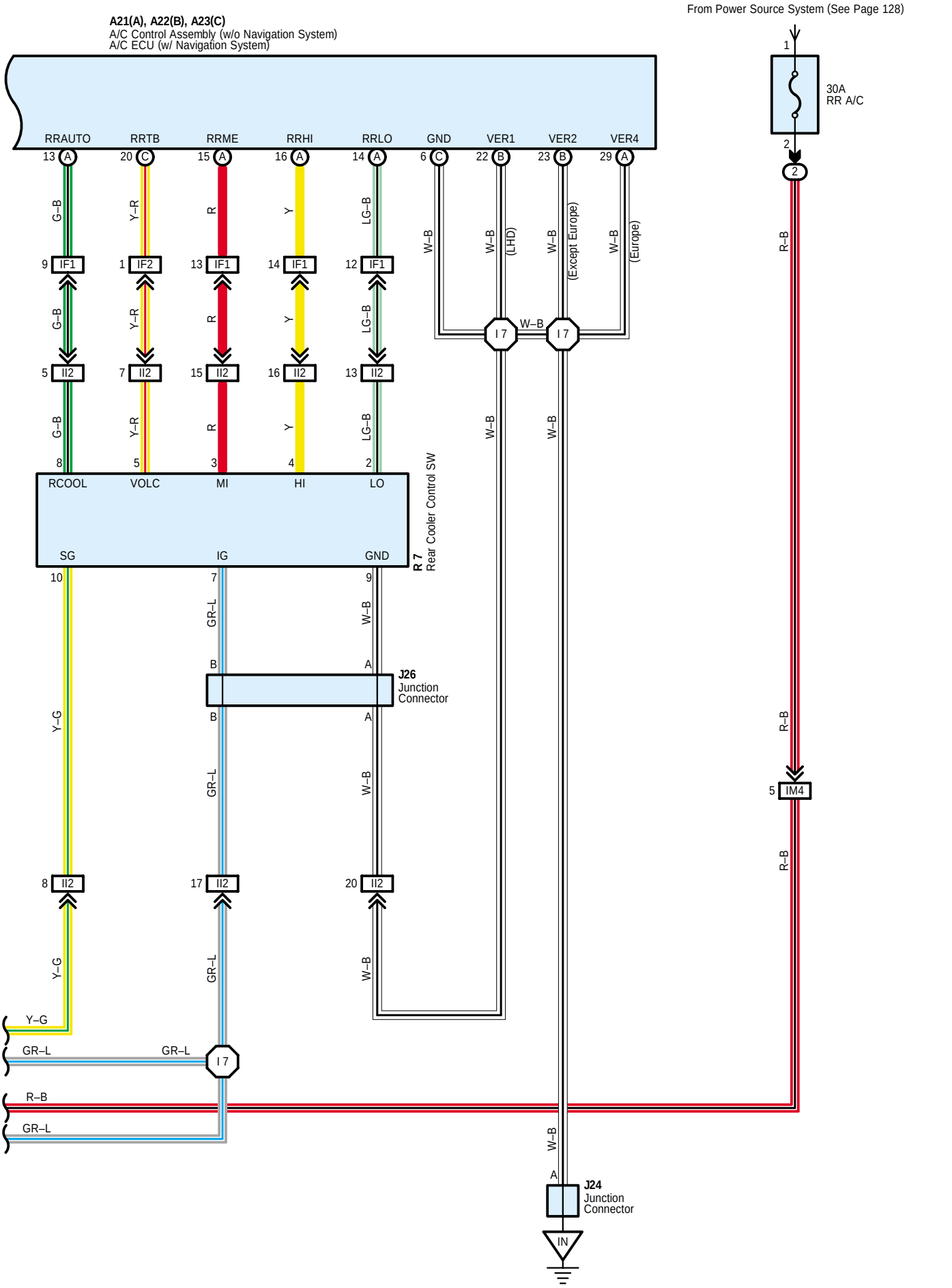
From Power Source System (See Page 128)
A21(A), A22(B), A23(C)
A/C Control Assembly (w/o Navigation System)
A/C ECU (w/ Navigation System)
RRAUTO
RRTB
RRME
RRHI
RRLO
GND
VER1
VER2
VER4
30A
RR A/C
RCOOL
VOLC
MI
HI
LO
SG
IG
GND
R 7
Rear Cooler Control SW
J26
Junction
Connector
J24
Junction
Connector
IN
(LHD)
(Except Europe)
(Europe)

System Outline

1. Manual Operation

When air volume is set by blower control SW within rear A/C control SW, signal is transmitted from rear A/C control SW to A/C control assembly. A/C control assembly controls power transistor, and controls the blower motor at preset air volume.

2. Auto Operation

When blower control SW within rear A/C control SW is set to AUTO position, signal is transmitted from rear A/C control SW to A/C control assembly. A/C control assembly controls the power transistor based on signal from various sensors, operates the blower motor, and adjusts air volume. It should be noted that auto control applies only when blowout port of front air conditioner is positioned at FACE, and blower is turned off otherwise.

3. Temperature control

Temperature control of rear air conditioner can be set up to + / −5 °C of front air conditioner temperature setting.

∗ Rear air conditioner works only when front air conditioner is operating, and only blows air when front air conditioner is off.

Service Hints

A21 (A), A22 (B), A23 (C) A/C Control Assembly (w/o Navigtaion System), A/C ECU (w/ Navigation System)

(B) 22, (B) 23, (C) 6, (A) 29−Ground : Always continuity

R7 Rear Cooler Control SW

7−Ground : Approx. 12 volts with the ignition SW at ON position

9−Ground : Always continuity

: Parts Location

Code		See Page	Code	See Page	Code	See Page
A21	A	48 (LHD)	J26	50 (LHD)	R21	53 (*6)
		68 (RHD)		70 (RHD)		73 (*15)
A22	B	48 (LHD)	R7	51 (LHD)	R22	53 (*6)
		68 (RHD)		71 (RHD)		73 (*15)
A23	C	48 (LHD)	R18	53 (*6)	R23	53 (*6)
		68 (RHD)		73 (*15)		73 (*15)
J24		50 (LHD)	R20	53 (*6)		
		70 (RHD)		73 (*15)		

: Relay Blocks

Code	See Page	Relay Blocks (Relay Block Location)
2	23	Engine Room R/B (Engine Compartment Left)

* 1 : LHD 1GR−FE * 2 : LHD 3RZ−FE * 3 : LHD 1KD−FTV * 4 : LHD 1KZ−TE * 5 : LHD 5L−E * 6 : LHD 5−Door * 7 : LHD 3−Door
* 8 : LHD 8Way Power Seat * 9 : LHD Except 8Way Power Seat * 10 : RHD 1GR−FE * 11 : RHD 3RZ−FE * 12 : RHD 1KD−FTV
* 13 : RHD 1KZ−TE * 14 : RHD 5L−E * 15 : RHD 5−Door * 16 : RHD 3−Door * 17 : RHD 8Way Power Seat
* 18 : RHD Except 8Way Power Seat

: Junction Block and Wire Harness Connector

Code	See Page	Junction Block and Wire Harness (Connector Location)
IB	26 (LHD)	Engine Room Main Wire and Driver Side J/B (Lower Finish Panel)
	28 (RHD)	
IK	27 (LHD)	Instrument Panel Wire and Driver Side J/B (Lower Finish Panel)
	29 (RHD)	
IL	27 (LHD)	
	29 (RHD)	
1A	32 (LHD)	Instrument Panel Wire and J/B No.1 (Instrument Panel Reinforcement Left)
	32 (RHD)	Instrument Panel Wire and J/B No.1 (Instrument Panel Reinforcement Right)
1B	32 (LHD)	Instrument Panel Wire and J/B No.1 (Instrument Panel Reinforcement Left)
	32 (RHD)	Instrument Panel Wire and J/B No.1 (Instrument Panel Reinforcement Right)
1E	32 (LHD)	Instrument Panel Wire and J/B No.1 (Instrument Panel Reinforcement Left)
	32 (RHD)	Instrument Panel Wire and J/B No.1 (Instrument Panel Reinforcement Right)
3D	36 (LHD)	Instrument Panel Wire and J/B No.3 (Instrument Panel Reinforcement Right)
	36 (RHD)	Instrument Panel Wire and J/B No.3 (Instrument Panel Reinforcement Left)
3E	36 (LHD)	Instrument Panel Wire and J/B No.3 (Instrument Panel Reinforcement Right)
	36 (RHD)	Instrument Panel Wire and J/B No.3 (Instrument Panel Reinforcement Left)

: Connector Joining Wire Harness and Wire Harness

Code	See Page	Joining Wire Harness and Wire Harness (Connector Location)
IF1	90 (LHD)	Instrument Panel Wire and Instrument Panel Wire (Near the J/B No.1)
	114 (RHD)	
IF2	90 (LHD)	Instrument Panel Wire and Instrument Panel Wire (Left Kick Panel)
	114 (RHD)	Instrument Panel Wire and Instrument Panel Wire (Right Kick Panel)
II2	90 (LHD)	Console Box Wire and Instrument Panel Wire (Under the Instrument Panel Brace LH)
	114 (RHD)	
IM4	92 (LHD)	Instrument Panel Wire and Engine Room Main Wire (Right Kick Panel)
	116 (RHD)	
IN3	94 (LHD)	Instrument Panel Wire and Floor Wire (Right Kick Panel)
	118 (RHD)	
BG2	98 (*6)	Floor Wire and Rear A/C Sub Wire (Right Quarter Panel Inner)
	122 (*15)	

: Ground Points

Code	See Page	Ground Points Location
IN	88 (LHD)	Right Kick Panel
	112 (RHD)	Left Kick Panel
BT	96 (*6)	Right Quarter Panel Inner
	100 (*7)	
	120 (*15)	
	124 (*16)	

: Splice Points

Code	See Page	Wire Harness with Splice Points	Code	See Page	Wire Harness with Splice Points
I7	90 (LHD)	Instrument Panel Wire	B7	98 (*6)	A/C Sub Wire
	114 (RHD)			122 (*15)	

* 1 : LHD 1GR-FE * 2 : LHD 3RZ-FE * 3 : LHD 1KD-FTV * 4 : LHD 1KZ-TE * 5 : LHD 5L-E * 6 : LHD 5-Door * 7 : LHD 3-Door
* 8 : LHD 8Way Power Seat * 9 : LHD Except 8Way Power Seat * 10 : RHD 1GR-FE * 11 : RHD 3RZ-FE * 12 : RHD 1KD-FTV
* 13 : RHD 1KZ-TE * 14 : RHD 5L-E * 15 : RHD 5-Door * 16 : RHD 3-Door * 17 : RHD 8Way Power Seat
* 18 : RHD Except 8Way Power Seat

Rear Air Conditioner (Manual A/C)

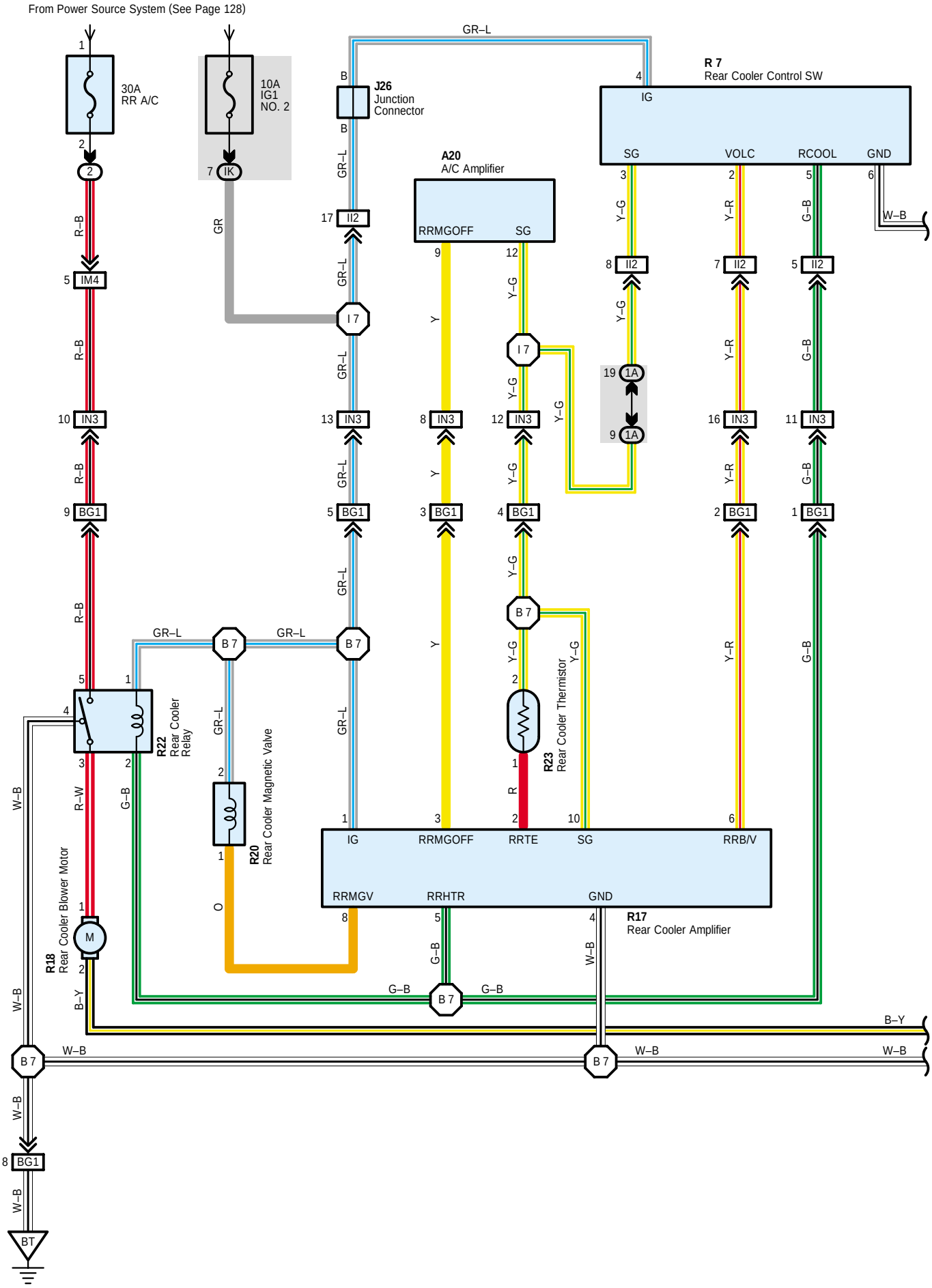

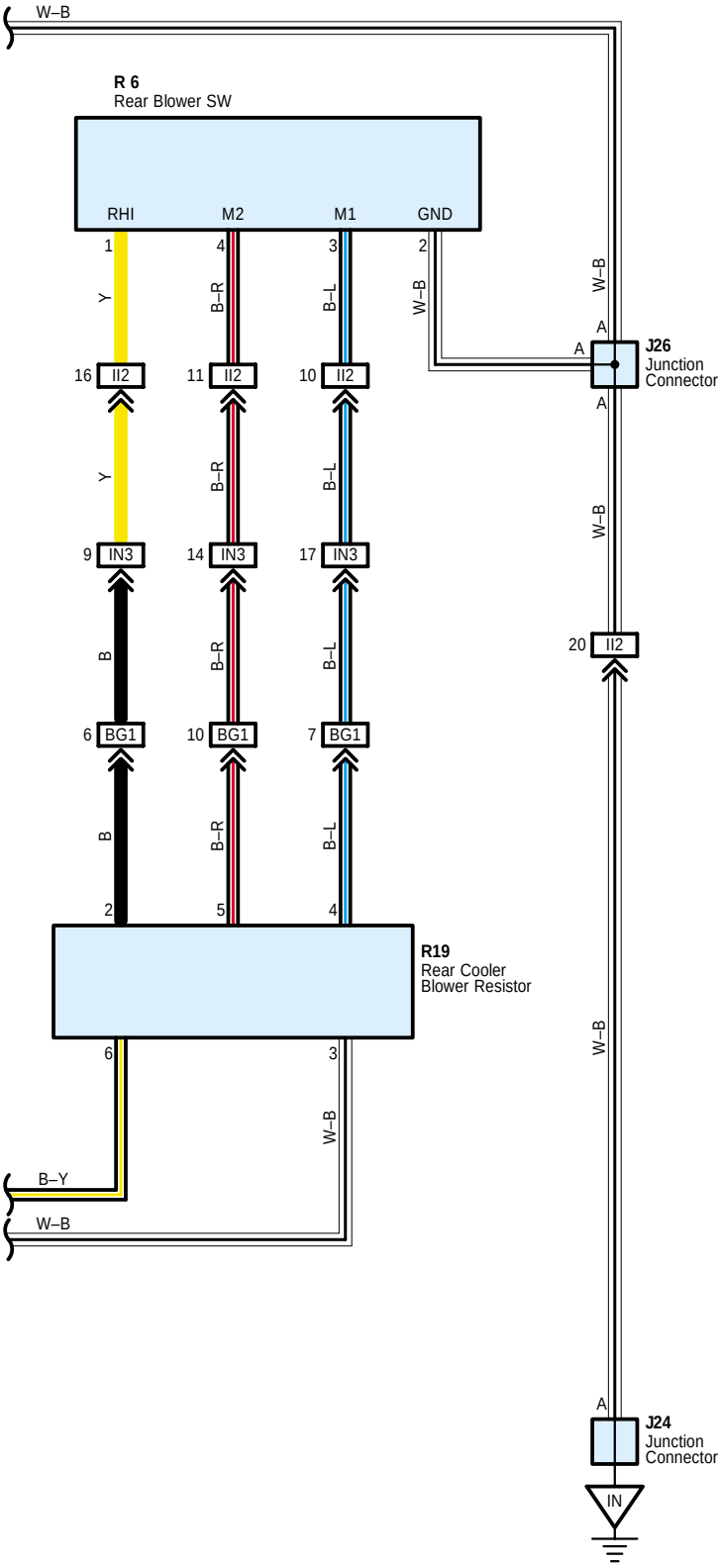
W–B
R 6
Rear Blower SW
RHI
M2
M1
GND
1
4
3
2
Y
B–R
B–L
W–B
W–B
A
A
J26
Junction
Connector
A
16
II2
11
II2
10
II2
Y
B–R
B–L
W–B
9
IN3
14
IN3
17
IN3
20
II2
B
B–R
B–L
6
BG1
10
BG1
7
BG1
B
B–R
B–L
2
5
4
R19
Rear Cooler
Blower Resistor
6
3
W–B
W–B
B–Y
W–B
A
J24
Junction
Connector
IN

System Outline

1. Heater Blower Motor Operation

∗ Low speed operation
When the REAR COOL SW in the rear A/C control SW is pushed to on and the rear blower control SW is moved to LO position, current flows to TERMINAL RCOOL of the rear A/C control SW to GROUND, activating the rear A/C relay. This causes the current to flow from the RR A/C fuse to TERMINAL 5 of the rear A/C relay to TERMINAL 3 to TERMINAL 1 of the rear blower motor to TERMINAL 2 to TERMINAL 6 of the rear blower resistor to TERMINAL 3 to GROUND, causing the blower motor to rotate at low speed.

∗ Medium speed operation (Operation at M1, M2)
When the REAR COOL SW in the rear A/C control SW is pushed to on and the rear blower control SW is moved to M1 position, current flows to TERMINAL RCOOL of the rear A/C control SW to GROUND, turning the rear A/C relay to switch on. This causes the current to flow from the RR A/C fuse to TERMINAL 5 of the rear A/C relay to TERMINAL 3 to TERMINAL 1 of the rear blower motor to TERMINAL 2 to TERMINAL 6 of the rear blower resistor to TERMINAL 4 to TERMINAL 3 of the rear blower control SW to GROUND. At this time, the blower resistance of the rear blower resistor is less than at low speed, so the blower motor rotates at medium low speed.
When the rear blower control SW is moved to M2 position, current flows through the motor flows from TERMINAL 6 of the rear blower resistor to TERMINAL 5 to TERMINAL 4 of the rear blower control SW to GROUND. At this time, resistance of the blower resistor is less than at M1 position, so the blower motor rotates at medium high speed.

∗ High speed operation
When the REAR COOL SW in the rear A/C control SW is pushed to on and the rear blower control SW is moved to HIGH position, current flows to TERMINAL RCOOL of the rear A/C control SW to GROUND, turning the rear A/C relay to switch on.
This causes the current to flow from the RR A/C fuse to TERMINAL 5 of the rear A/C relay to TERMINAL 3 to TERMINAL 1 of the rear blower motor to TERMINAL 2 to TERMINAL 6 of the rear blower resistor to TERMINAL 2 to TERMINAL 1 of the rear blower control SW to GROUND, causing the blower motor to rotate at high speed.

Service Hints

R22 Rear Cooler Relay
5–3 : Closed with the ignition SW on and the REAR COOL SW in the rear A/C control SW on

R17 Rear Cooler Amplifier
1–Ground : Approx. 12 volts with ignition SW at ON
4–Ground : Always continuity

○ : Parts Location

Code	See Page	Code	See Page	Code	See Page
A20	48 (LHD)	R7	51 (LHD)	R20	53 (*6)
	68 (RHD)		71 (RHD)		73 (*15)
J24	50 (LHD)	R17	53 (*6)	R22	53 (*6)
	70 (RHD)		73 (*15)		73 (*15)
J26	50 (LHD)	R18	53 (*6)	R23	53 (*6)
	70 (RHD)		73 (*15)		73 (*15)
R6	51 (LHD)	R19	53 (*6)		
	71 (RHD)		73 (*15)		

▭ : Relay Blocks

Code	See Page	Relay Blocks (Relay Block Location)
2	23	Engine Room R/B (Engine Compartment Left)

* 1 : LHD 1GR–FE * 2 : LHD 3RZ–FE * 3 : LHD 1KD–FTV * 4 : LHD 1KZ–TE * 5 : LHD 5L–E * 6 : LHD 5–Door * 7 : LHD 3–Door
* 8 : LHD 8Way Power Seat * 9 : LHD Except 8Way Power Seat * 10 : RHD 1GR–FE * 11 : RHD 3RZ–FE * 12 : RHD 1KD–FTV
* 13 : RHD 1KZ–TE * 14 : RHD 5L–E * 15 : RHD 5–Door * 16 : RHD 3–Door * 17 : RHD 8Way Power Seat
* 18 : RHD Except 8Way Power Seat

: **Junction Block and Wire Harness Connector**

Code	See Page	Junction Block and Wire Harness (Connector Location)
IK	27 (LHD)	Instrument Panel Wire and Driver Side J/B (Lower Finish Panel)
	29 (RHD)	
1A	32 (LHD)	Instrument Panel Wire and J/B No.1 (Instrument Panel Reinforcement Left)
	32 (RHD)	Instrument Panel Wire and J/B No.1 (Instrument Panel Reinforcement Right)

: **Connector Joining Wire Harness and Wire Harness**

Code	See Page	Joining Wire Harness and Wire Harness (Connector Location)
II2	90 (LHD)	Console Box Wire and Instrument Panel Wire (Under the Instrument Panel Brace LH)
	114 (RHD)	
IM4	92 (LHD)	Instrument Panel Wire and Engine Room Main Wire (Right Kick Panel)
	116 (RHD)	
IN3	94 (LHD)	Instrument Panel Wire and Floor Wire (Right Kick Panel)
	118 (RHD)	
BG1	98 (*6)	Floor Wire and Rear A/C Sub Wire (Right Quarter Panel Inner)
	122 (*15)	

: **Ground Points**

Code	See Page	Ground Points Location
IN	88 (LHD)	Right Kick Panel
	112 (RHD)	Left Kick Panel
BT	96 (*6)	Right Quarter Panel Inner
	100 (*7)	
	120 (*15)	
	124 (*16)	

: **Splice Points**

Code	See Page	Wire Harness with Splice Points	Code	See Page	Wire Harness with Splice Points
I7	90 (LHD)	Instrument Panel Wire	B7	98 (*6)	A/C Sub Wire
	114 (RHD)			122 (*15)	

* 1 : LHD 1GR-FE * 2 : LHD 3RZ-FE * 3 : LHD 1KD-FTV * 4 : LHD 1KZ-TE * 5 : LHD 5L-E * 6 : LHD 5-Door * 7 : LHD 3-Door
* 8 : LHD 8Way Power Seat * 9 : LHD Except 8Way Power Seat * 10 : RHD 1GR-FE * 11 : RHD 3RZ-FE * 12 : RHD 1KD-FTV
* 13 : RHD 1KZ-TE * 14 : RHD 5L-E * 15 : RHD 5-Door * 16 : RHD 3-Door * 17 : RHD 8Way Power Seat
* 18 : RHD Except 8Way Power Seat

Cooler Box

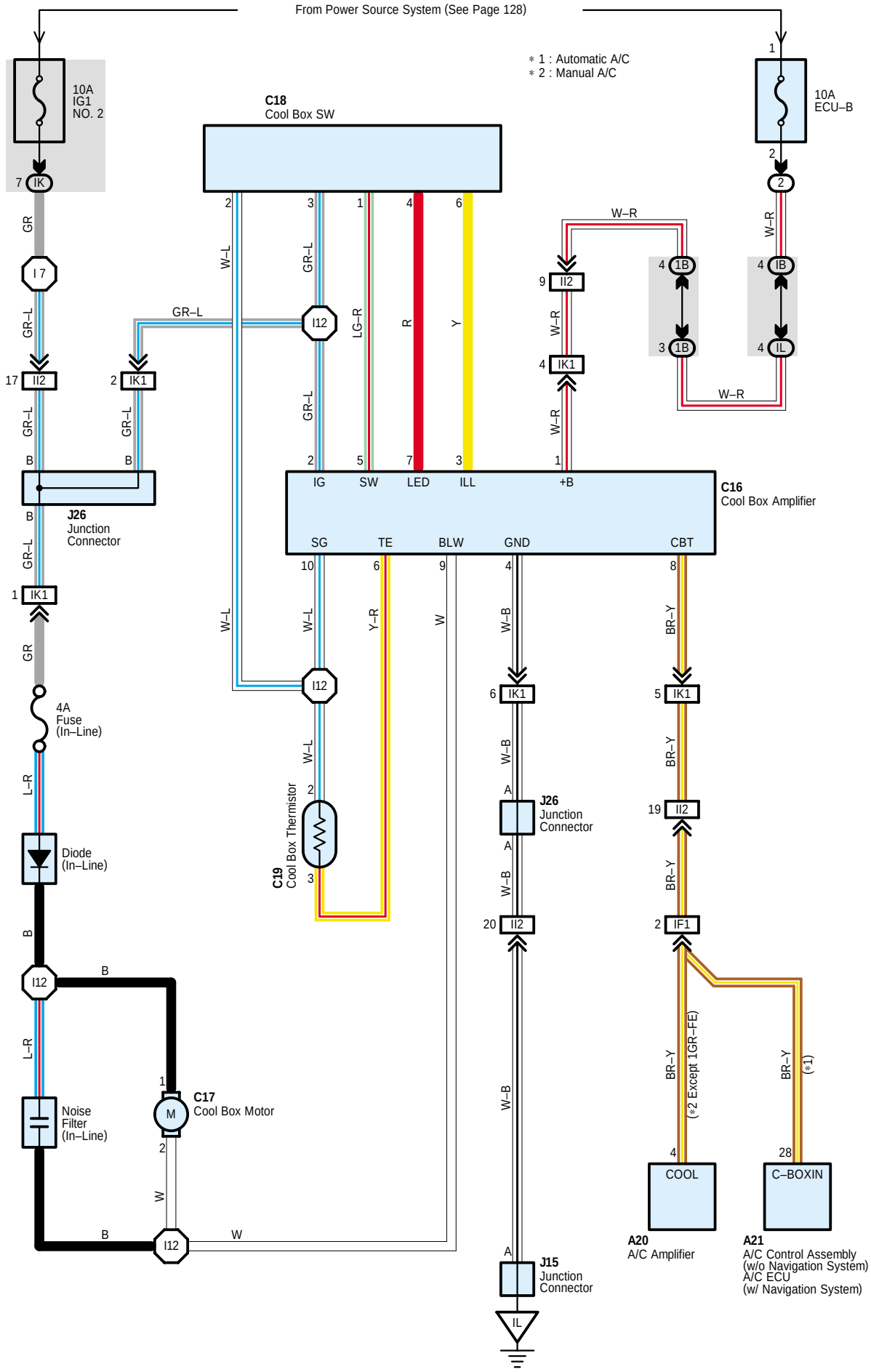
From Power Source System (See Page 128)
* 1 : Automatic A/C
* 2 : Manual A/C
10A
IG1
NO. 2
10A
ECU–B
C18
Cool Box SW
C16
Cool Box Amplifier
IG
SW
LED
ILL
+B
SG
TE
BLW
GND
CBT
J26
Junction
Connector
4A
Fuse
(In–Line)
Diode
(In–Line)
Noise
Filter
(In–Line)
C17
Cool Box Motor
C19
Cool Box Thermistor
J15
Junction
Connector
A20
A/C Amplifier
A21
A/C Control Assembly
(w/o Navigation System)
A/C ECU
(w/ Navigation System)
COOL
C–BOXIN
(*2 Except 1GR–FE)
(*1)

System Outline

When cooler SW is turned on, signal enters TERMINAL 5 of cooler box amplifier. Cooler box amplifier outputs compressor drive signal to A/C control assembly (Automatic A/C) and A/C amplifier (Manual A/C) and turns off compressor drive and magnet valve. When the temperature in the box is above 3°C, signal from thermistor is transmitted to cooler box amplifier, by which the motor rotates. Cooling medium is introduced into the evaporator by the motor, and air circulated by motor in the box is cooled when passing through the evaporator.

Service Hints

C16 Cool Box Amplifier

1–Ground : Always approx. 12 volts
4–Ground : Always continuity

: Parts Location

Code	See Page	Code	See Page	Code	See Page
A20	48 (LHD)	C17	49 (LHD)	J15	50 (LHD)
	68 (RHD)		69 (RHD)		70 (RHD)
A21	48 (LHD)	C18	49 (LHD)	J26	50 (LHD)
	68 (RHD)		69 (RHD)		70 (RHD)
C16	49 (LHD)	C19	49 (LHD)		
	69 (RHD)		69 (RHD)		

: Relay Blocks

Code	See Page	Relay Blocks (Relay Block Location)
2	23	Engine Room R/B (Engine Compartment Left)

: Junction Block and Wire Harness Connector

Code	See Page	Junction Block and Wire Harness (Connector Location)
IB	26 (LHD)	Engine Room Main Wire and Driver Side J/B (Lower Finish Panel)
	28 (RHD)	
IK	27 (LHD)	Instrument Panel Wire and Driver Side J/B (Lower Finish Panel)
	29 (RHD)	
IL	27 (LHD)	
	29 (RHD)	
1B	32 (LHD)	Instrument Panel Wire and J/B No.1 (Instrument Panel Reinforcement Left)
	32 (RHD)	Instrument Panel Wire and J/B No.1 (Instrument Panel Reinforcement Right)

: Connector Joining Wire Harness and Wire Harness

Code	See Page	Joining Wire Harness and Wire Harness (Connector Location)
IF1	90 (LHD)	Instrument Panel Wire and Instrument Panel Wire (Near the J/B No.1)
	114 (RHD)	
II2	90 (LHD)	Console Box Wire and Instrument Panel Wire (Under the Instrument Panel Brace LH)
	114 (RHD)	
IK1	92 (LHD)	Console Box Wire and A/C Sub Wire (Rear Side of the Console Box)
	116 (RHD)	

: Ground Points

Code	See Page	Ground Points Location
IL	88 (LHD)	Near the Right Side of Steering Column
	112 (RHD)	Instrument Panel Brace RH

: Splice Points

Code	See Page	Wire Harness with Splice Points	Code	See Page	Wire Harness with Splice Points
I7	90 (LHD)	Instrument Panel Wire	I12	90 (LHD)	A/C Sub Wire
	114 (RHD)			114 (RHD)	

I GROUND POINT (LHD)

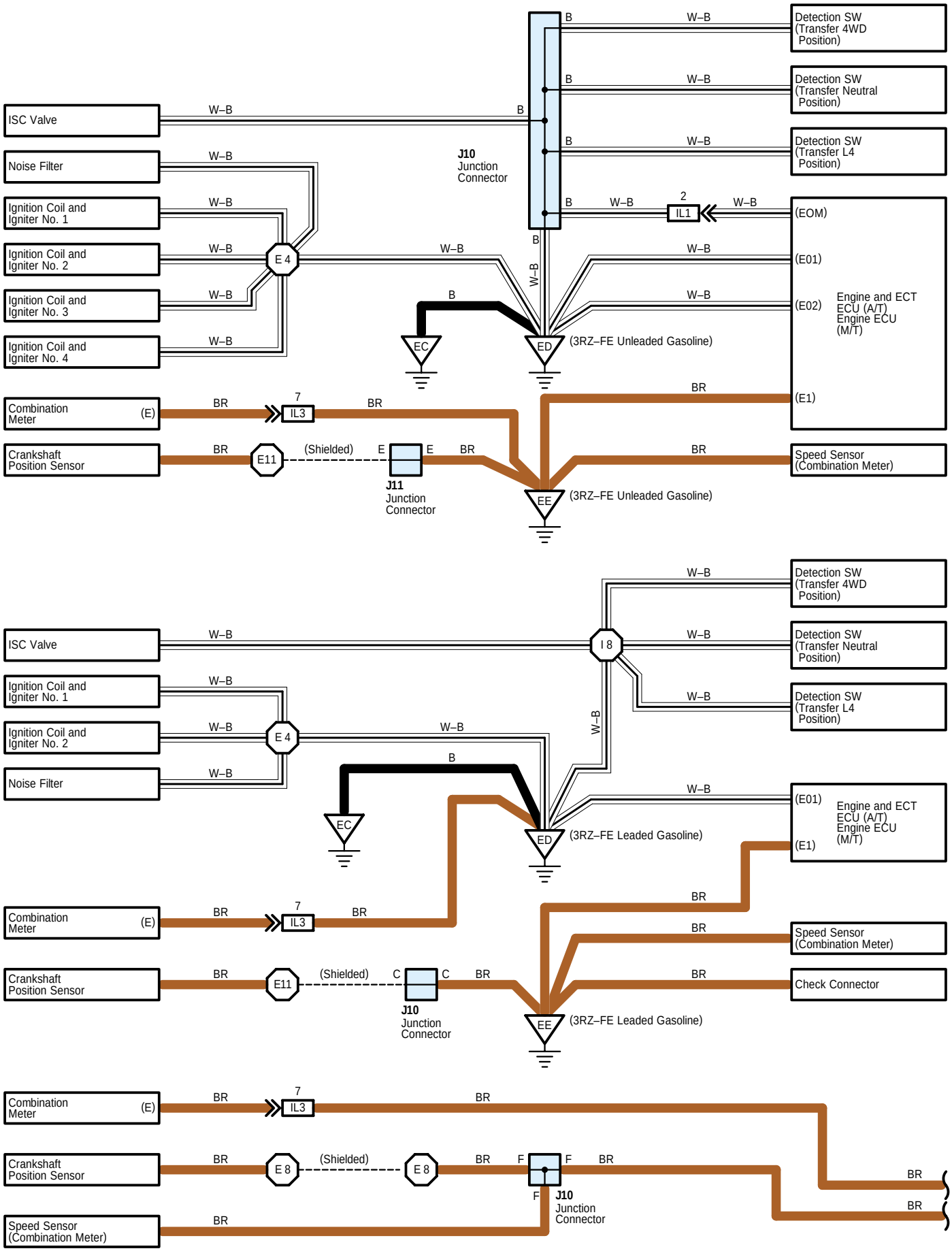

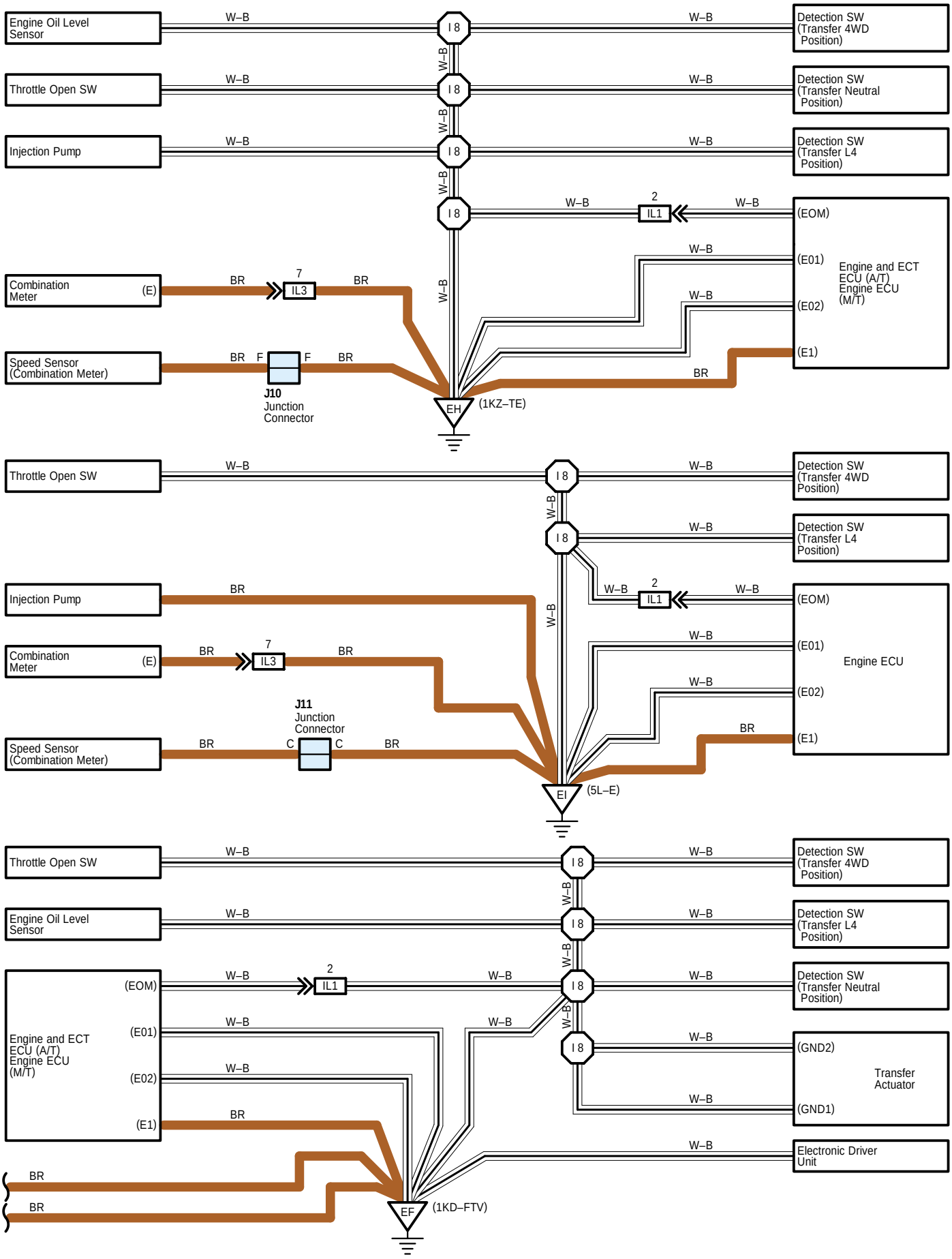
Engine Oil Level Sensor
Throttle Open SW
Injection Pump
Combination Meter
(E)
Speed Sensor (Combination Meter)
W–B
BR
I 8
IL1
IL3
2
7
F
J10 Junction Connector
EH
(1KZ–TE)
Detection SW (Transfer 4WD Position)
Detection SW (Transfer Neutral Position)
Detection SW (Transfer L4 Position)
(EOM)
(E01)
(E02)
(E1)
Engine and ECT ECU (A/T) Engine ECU (M/T)
Throttle Open SW
Injection Pump
Combination Meter
(E)
Speed Sensor (Combination Meter)
J11 Junction Connector
C
EI
(5L–E)
Detection SW (Transfer 4WD Position)
Detection SW (Transfer L4 Position)
(EOM)
(E01)
(E02)
(E1)
Engine ECU
Throttle Open SW
Engine Oil Level Sensor
Engine and ECT ECU (A/T) Engine ECU (M/T)
(EOM)
(E01)
(E02)
(E1)
EF
(1KD–FTV)
Detection SW (Transfer 4WD Position)
Detection SW (Transfer L4 Position)
Detection SW (Transfer Neutral Position)
(GND2)
(GND1)
Transfer Actuator
Electronic Driver Unit

I GROUND POINT (LHD)

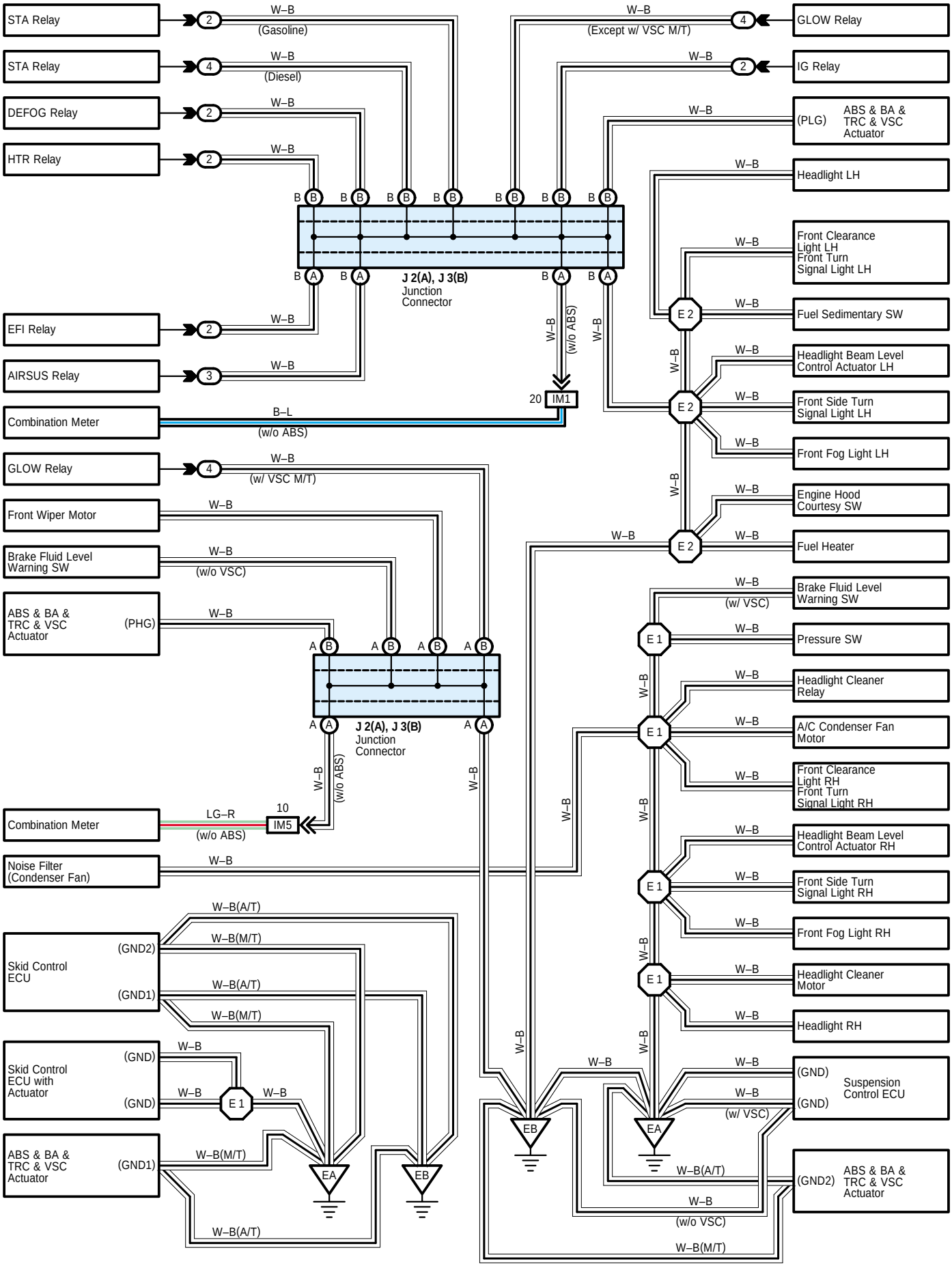

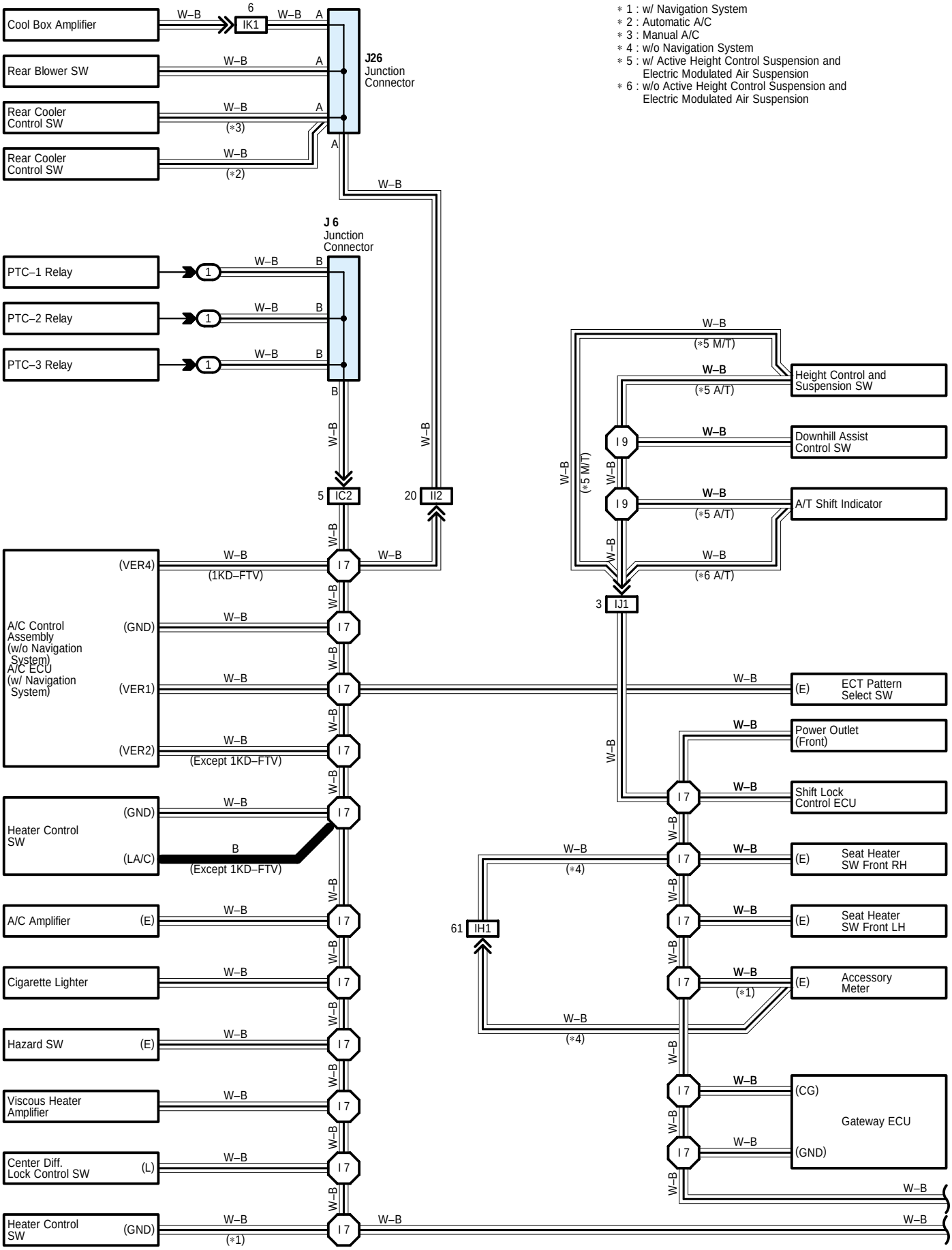
∗1 : w/ Navigation System
∗2 : Automatic A/C
∗3 : Manual A/C
∗4 : w/o Navigation System
∗5 : w/ Active Height Control Suspension and Electric Modulated Air Suspension
∗6 : w/o Active Height Control Suspension and Electric Modulated Air Suspension
Cool Box Amplifier
Rear Blower SW
Rear Cooler Control SW
Rear Cooler Control SW
J26 Junction Connector
J 6 Junction Connector
PTC–1 Relay
PTC–2 Relay
PTC–3 Relay
IK1
IC2
II2
IJ1
IH1
Height Control and Suspension SW
Downhill Assist Control SW
A/T Shift Indicator
A/C Control Assembly (w/o Navigation System) A/C ECU (w/ Navigation System)
(VER4)
(1KD–FTV)
(GND)
(VER1)
(VER2)
(Except 1KD–FTV)
Heater Control SW
(LA/C)
A/C Amplifier
Cigarette Lighter
Hazard SW
Viscous Heater Amplifier
Center Diff. Lock Control SW
ECT Pattern Select SW
Power Outlet (Front)
Shift Lock Control ECU
Seat Heater SW Front RH
Seat Heater SW Front LH
Accessory Meter
Gateway ECU
(CG)
(E)
(L)
W–B
B
A

I GROUND POINT (LHD)

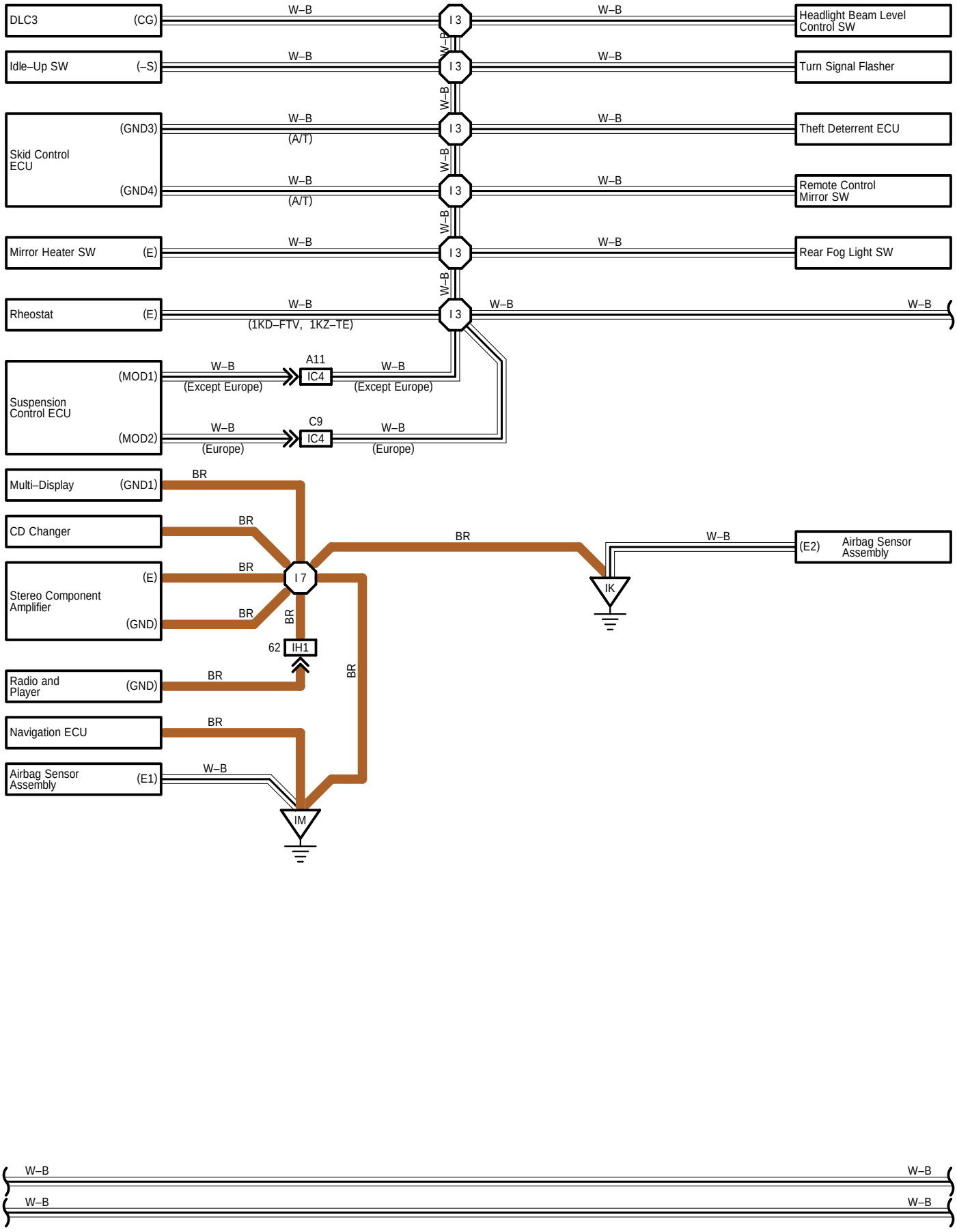

∗ 1 : w/ Navigation System
∗ 2 : Automatic A/C
∗ 3 : Manual A/C
∗ 4 : w/o Navigation System
∗ 7 : w/ Jam Protection
∗ 8 : w/o Jam Protection

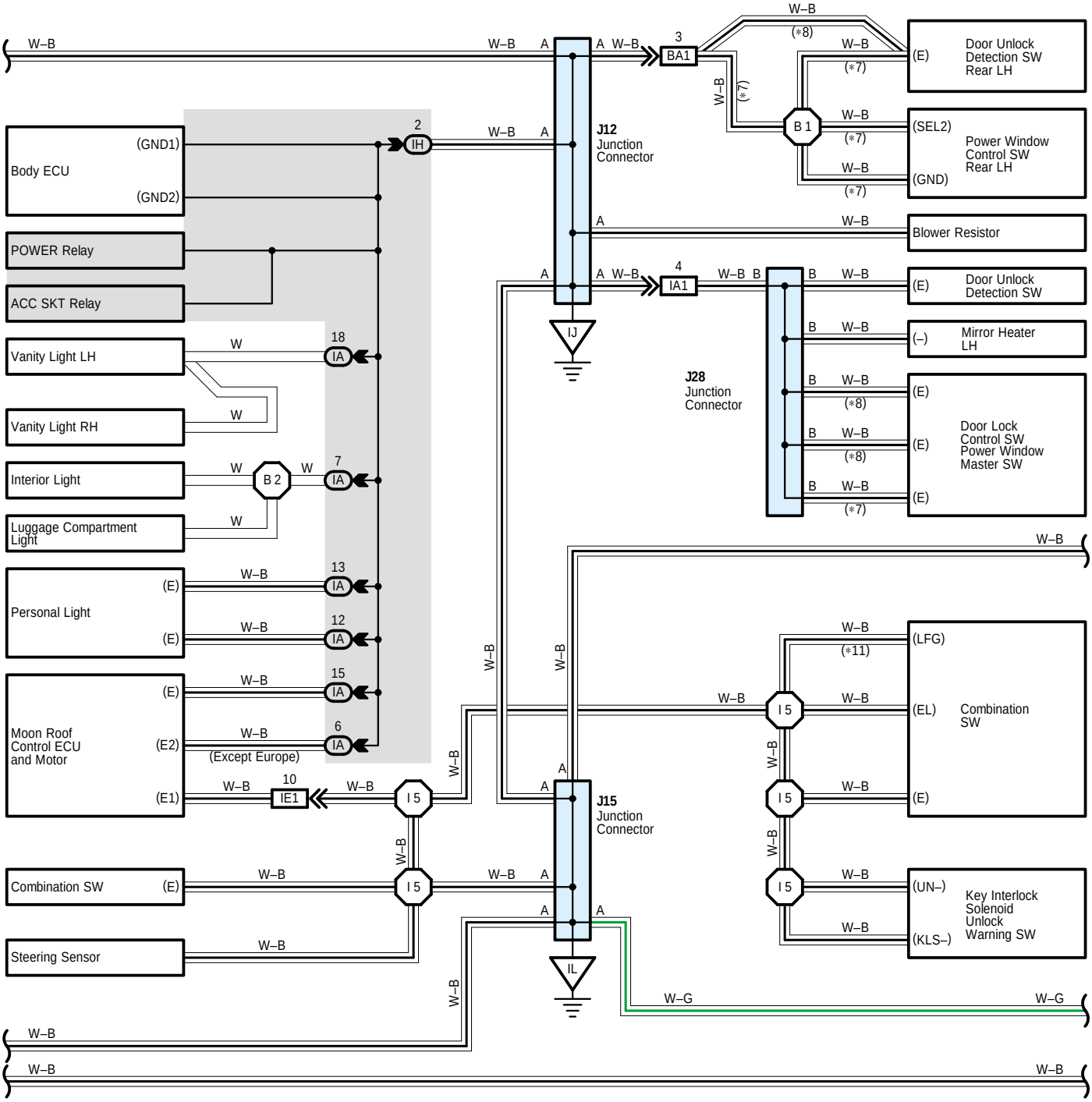

I GROUND POINT (LHD)

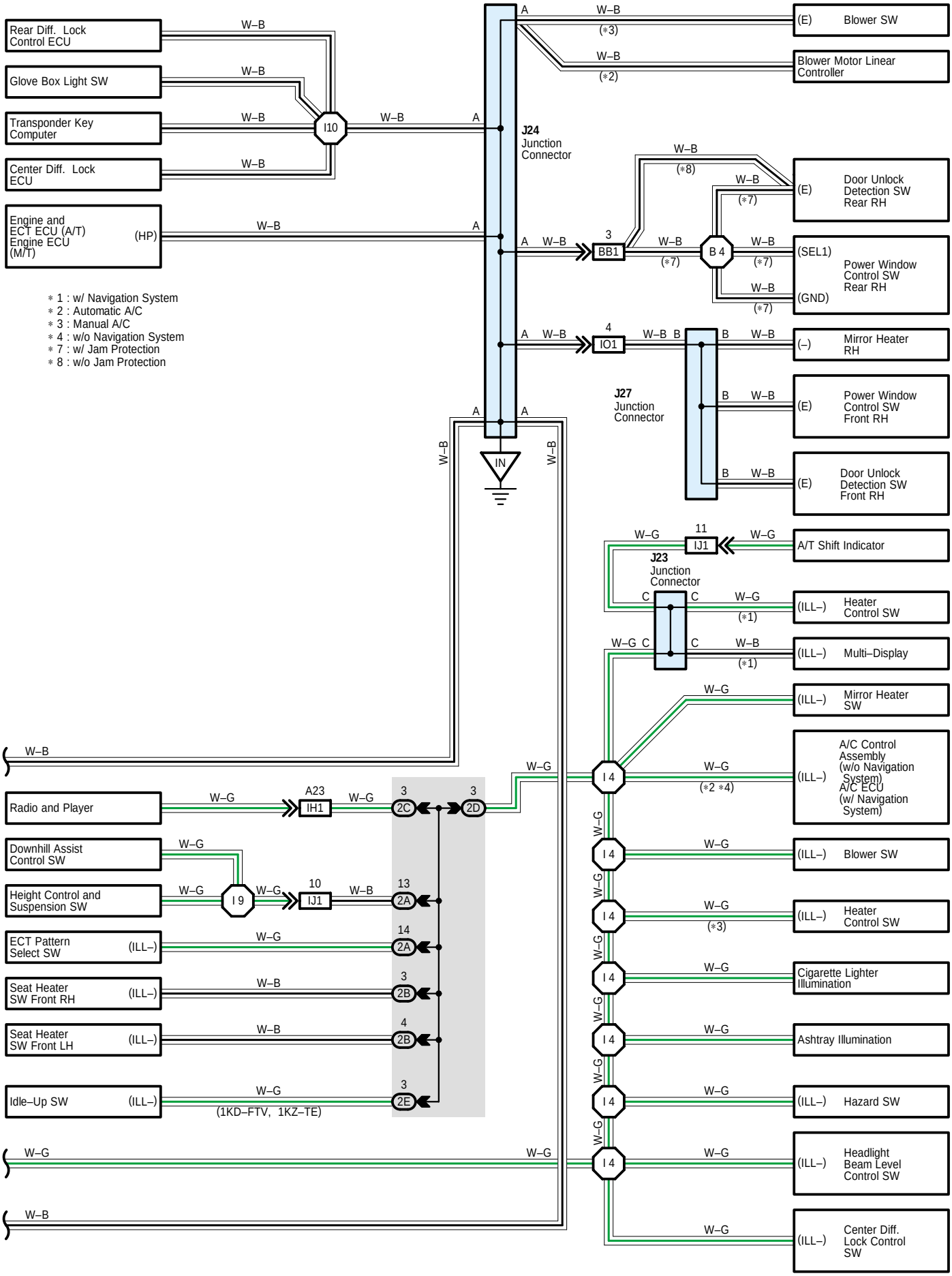

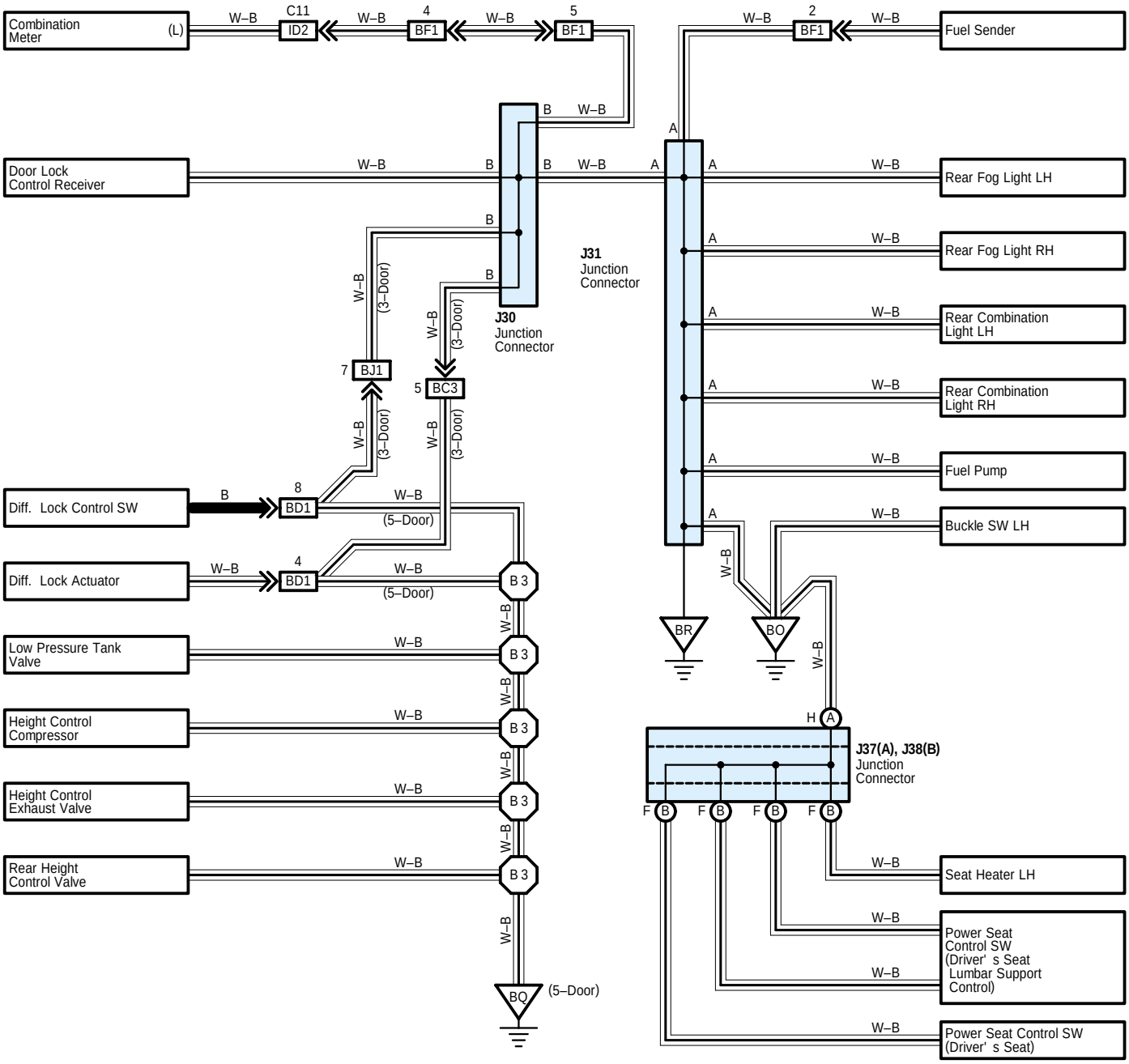
Combination Meter
(L)
W–B
C11
ID2
4
BF1
5
BF1
2
BF1
Fuel Sender
Door Lock Control Receiver
Rear Fog Light LH
Rear Fog Light RH
Rear Combination Light LH
Rear Combination Light RH
Fuel Pump
Buckle SW LH
J31 Junction Connector
J30 Junction Connector
(3–Door)
7
BJ1
5
BC3
Diff. Lock Control SW
8
BD1
(5–Door)
Diff. Lock Actuator
4
BD1
B 3
Low Pressure Tank Valve
Height Control Compressor
Height Control Exhaust Valve
Rear Height Control Valve
BQ
(5–Door)
BR
BO
J37(A), J38(B) Junction Connector
Seat Heater LH
Power Seat Control SW (Driver' s Seat Lumbar Support Control)
Power Seat Control SW (Driver' s Seat)

I GROUND POINT (LHD)

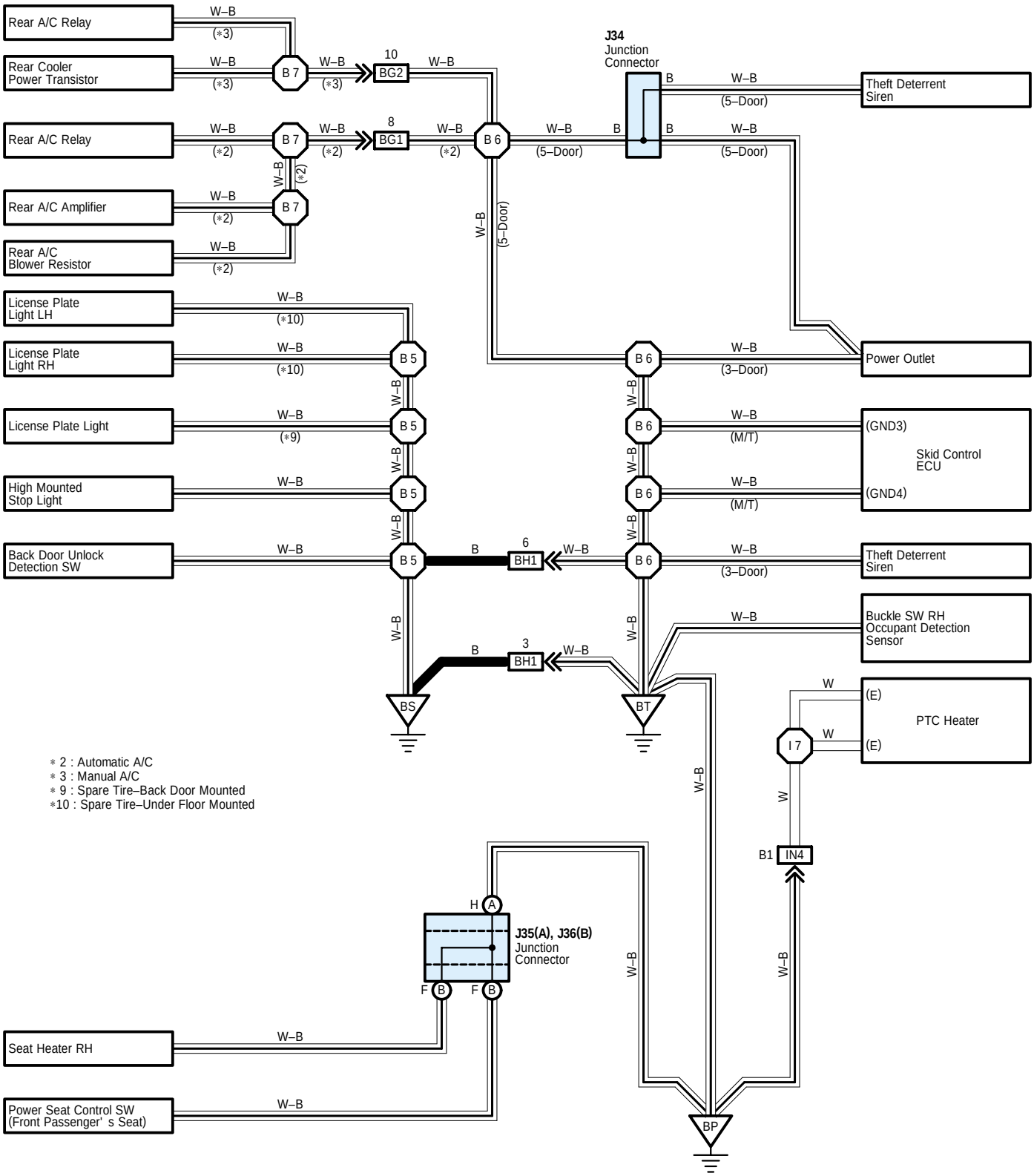

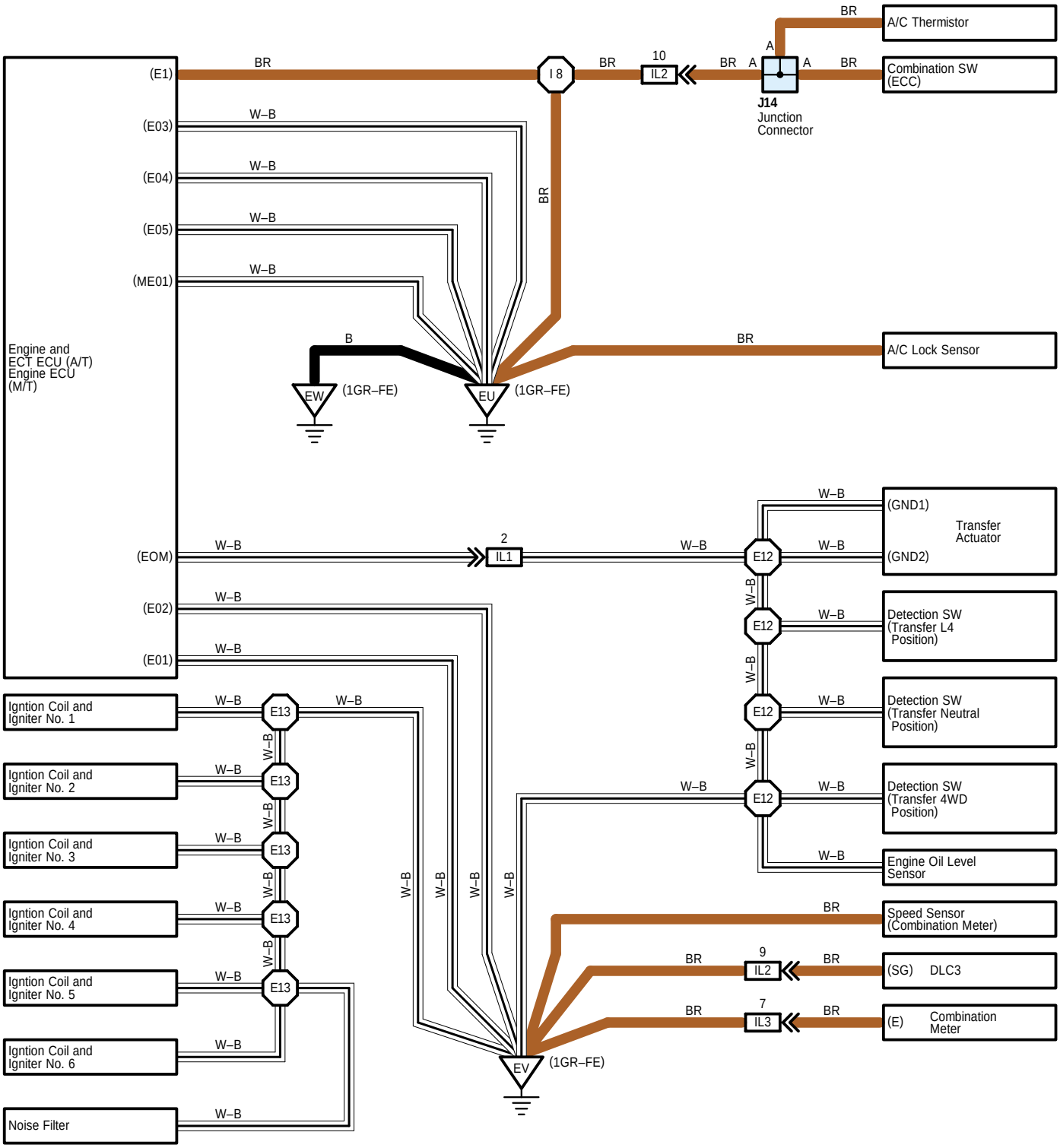
A/C Thermistor
Combination SW (ECC)
J14 Junction Connector
A/C Lock Sensor
Engine and ECT ECU (A/T) Engine ECU (M/T)
(E1)
(E03)
(E04)
(E05)
(ME01)
(EOM)
(E02)
(E01)
I 8
IL2
IL1
IL3
EW
EU
EV
(1GR–FE)
E12
E13
(GND1)
(GND2)
Transfer Actuator
Detection SW (Transfer L4 Position)
Detection SW (Transfer Neutral Position)
Detection SW (Transfer 4WD Position)
Engine Oil Level Sensor
Speed Sensor (Combination Meter)
(SG) DLC3
(E) Combination Meter
Igntion Coil and Igniter No. 1
Igntion Coil and Igniter No. 2
Igntion Coil and Igniter No. 3
Igntion Coil and Igniter No. 4
Igntion Coil and Igniter No. 5
Igntion Coil and Igniter No. 6
Noise Filter
BR
W–B
B

I GROUND POINT (LHD)

: Parts Location

Code		See Page	Code	See Page	Code		See Page
J2	A	39 (*1)	J6	47 (*5)	J30		54 (*7)
		41 (*2)	J10	50 (LHD)	J31		52 (*6)
		43 (*3)	J11	50 (LHD)			54 (*7)
		45 (*4)	J12	50 (LHD)	J34		52 (*6)
		47 (*5)	J14	50 (LHD)	J35	A	56 (*8)
J3	B	39 (*1)	J15	50 (LHD)			57 (*9)
		41 (*2)	J23	50 (LHD)	J36	B	56 (*8)
		43 (*3)	J24	50 (LHD)			57 (*9)
		45 (*4)	J26	50 (LHD)	J37	A	56 (*8)
		47 (*5)	J27	52 (*6)			57 (*9)
J6		39 (*1)		54 (*7)	J38	B	56 (*8)
		41 (*2)	J28	52 (*6)			57 (*9)
		43 (*3)		54 (*7)			
		45 (*4)	J30	52 (*6)			

: Relay Blocks

Code	See Page	Relay Blocks (Relay Block Location)
1	24 (LHD)	Engine Room R/B No.1 (Engine Compartment Right)
2	23	Engine Room R/B (Engine Compartment Left)
3	24	Engine Room R/B No.3 (Engine Compartment Left)
4	25	Engine Room R/B No.4 (Engine Compartment Left)

: Junction Block and Wire Harness Connector

Code	See Page	Junction Block and Wire Harness (Connector Location)
IA	26 (LHD)	Roof Wire and Driver Side J/B (Lower Finish Panel)
IH	27 (LHD)	Instrument Panel Wire and Driver Side J/B (Lower Finish Panel)
2A	34	Instrument Panel Wire and J/B No.2 (Instrument Panel Reinforcement Center)
2B		
2C		
2D		
2E		

* 1 : LHD 1GR-FE * 2 : LHD 3RZ-FE * 3 : LHD 1KD-FTV * 4 : LHD 1KZ-TE * 5 : LHD 5L-E * 6 : LHD 5-Door * 7 : LHD 3-Door
* 8 : LHD 8Way Power Seat * 9 : LHD Except 8Way Power Seat * 10 : RHD 1GR-FE * 11 : RHD 3RZ-FE * 12 : RHD 1KD-FTV
* 13 : RHD 1KZ-TE * 14 : RHD 5L-E * 15 : RHD 5-Door * 16 : RHD 3-Door * 17 : RHD 8Way Power Seat
* 18 : RHD Except 8Way Power Seat

: Connector Joining Wire Harness and Wire Harness

Code	See Page	Joining Wire Harness and Wire Harness (Connector Location)
IA1	88 (LHD)	Front Door LH Wire and Instrument Panel Wire (Left Kick Panel)
IC2	88 (LHD)	Instrument Panel Wire and Engine Room Main Wire (Left Kick Panel)
IC4		
ID2	90 (LHD)	Instrument Panel Wire and Floor No.2 Wire (Left Kick Panel)
IE1	90 (LHD)	Roof Wire and Instrument Panel Wire (Upper the Driver Side J/B)
IH1	90 (LHD)	Instrument Panel Wire and Instrument Panel No.2 Wire (Instrument Panel Brace LH)
II2	90 (LHD)	Console Box Wire and Instrument Panel Wire (Under the Instrument Panel Brace LH)
IJ1	92 (LHD)	Instrument Panel Wire and Switch Wire (Front Side of the Console Box)
IK1	92 (LHD)	Console Box Wire and A/C Sub Wire (Rear Side of the Console Box)
IL1	92 (LHD)	Engine Wire and Instrument Panel Wire (Right Side of the Blower Unit)
IL2		
IL3		
IM1	92 (LHD)	Instrument Panel Wire and Engine Room Main Wire (Right Kick Panel)
IM5		
IN4	94 (LHD)	Instrument Panel Wire and Floor Wire (Right Kick Panel)
IO1	94 (LHD)	Front Door RH Wire and Instrument Panel Wire (Right Kick Panel)
BA1	96 (*6)	Rear Door LH Wire and Instrument Panel Wire (Center Pillar LH)
BB1	96 (*6)	Rear Door RH Wire and Instrument Panel Wire (Center Pillar RH)
BC3	100 (*7)	Floor No.2 Wire and Frame Wire (Frame Side Rail LH)
BD1	96 (*6)	Frame Wire and Differential Wire (Left Side of the No.6 Cross Member)
	100 (*7)	
BF1	98 (*6)	Floor No.2 Wire and Frame No.2 Wire (Left Side of the Rear Floor)
BG1	98 (*6)	Floor Wire and Rear A/C Sub Wire (Right Quarter Panel Inner)
BG2		
BH1	98 (*6)	Back Door No.1 Wire and Floor Wire (Right Quarter Panel Inner)
	100 (*7)	
BJ1	100 (*7)	Floor No.2 Wire and Frame Wire (Frame Side Rail LH)

* 1 : LHD 1GR-FE * 2 : LHD 3RZ-FE * 3 : LHD 1KD-FTV * 4 : LHD 1KZ-TE * 5 : LHD 5L-E * 6 : LHD 5-Door * 7 : LHD 3-Door
* 8 : LHD 8Way Power Seat * 9 : LHD Except 8Way Power Seat * 10 : RHD 1GR-FE * 11 : RHD 3RZ-FE * 12 : RHD 1KD-FTV
* 13 : RHD 1KZ-TE * 14 : RHD 5L-E * 15 : RHD 5-Door * 16 : RHD 3-Door * 17 : RHD 8Way Power Seat
* 18 : RHD Except 8Way Power Seat

I GROUND POINT (LHD)

▽ : **Ground Points**

Code	See Page	Ground Points Location
EA	78 (*1)	Front Right Fender
	80 (*2)	
	82 (*3)	
	84 (*4)	
	86 (*5)	
EB	78 (*1)	Front Left Fender
	80 (*2)	
	82 (*3)	
	84 (*4)	
	86 (*5)	
EC	80 (*2)	Near the Air Cleaner
ED	80 (*2)	Ignition Coil Bracket
EE	80 (*2)	Intake Manifold
EF	82 (*3)	Rear Part of Cylinder Block
EH	84 (*4)	
EI	86 (*5)	
EU	78 (*1)	Rear Side of Right Bank Cylinder Block
EV	78 (*1)	Rear Side of Left Bank Cylinder Block
EW	78 (*1)	Near the Washer Tank
IJ	88 (LHD)	Left Kick Panel
IK	88 (LHD)	Near the Left Side of Steering Column
IL	88 (LHD)	Near the Right Side of Steering Column
IM	88 (LHD)	Instrument Panel Brace LH
IN	88 (LHD)	Right Kick Panel
BO	96 (*6)	Under the Driver's Seat
	100 (*7)	
BP	96 (*6)	Under the Front Passenger's Seat
	100 (*7)	
BQ	96 (*6)	Near the Left Side of No.5 Cross Member
BR	96 (*6)	Left Quarter Panel Inner
	100 (*7)	
BS	96 (*6)	Back Door Panel Center
	100 (*7)	
BT	96 (*6)	Right Quarter Panel Inner
	100 (*7)	

* 1 : LHD 1GR-FE * 2 : LHD 3RZ-FE * 3 : LHD 1KD-FTV * 4 : LHD 1KZ-TE * 5 : LHD 5L-E * 6 : LHD 5-Door * 7 : LHD 3-Door
* 8 : LHD 8Way Power Seat * 9 : LHD Except 8Way Power Seat * 10 : RHD 1GR-FE * 11 : RHD 3RZ-FE * 12 : RHD 1KD-FTV
* 13 : RHD 1KZ-TE * 14 : RHD 5L-E * 15 : RHD 5-Door * 16 : RHD 3-Door * 17 : RHD 8Way Power Seat
* 18 : RHD Except 8Way Power Seat

: **Splice Points**

Code	See Page	Wire Harness with Splice Points	Code	See Page	Wire Harness with Splice Points
E1	78 (*1)	Engine Room Main Wire	I4	90 (LHD)	Instrument Panel Wire
	80 (*2)		I5		
	82 (*3)		I7		
	84 (*4)		I8	90 (LHD)	Engine Wire
	86 (*5)		I9	90 (LHD)	Switch Wire
E2	78 (*1)		I10	90 (LHD)	Instrument Panel Wire
	80 (*2)		B1	98 (*6)	Rear Door No.1 Wire LH
	82 (*3)		B2	98 (*6)	Roof Wire
	84 (*4)			100 (*7)	
	86 (*5)		B3	98 (*6)	Frame Wire
E4	80 (*2)	Engine Wire	B4	98 (*6)	Rear Door No.1 Wire RH
E8	82 (*3)		B5	98 (*6)	Back Door No.1 Wire
E11	80 (*2)			100 (*7)	
E12	78 (*1)		B6	98 (*6)	Floor Wire
E13				100 (*7)	
I3	90 (LHD)	Instrument Panel Wire	B7	98 (*6)	A/C Sub Wire

* 1 : LHD 1GR-FE * 2 : LHD 3RZ-FE * 3 : LHD 1KD-FTV * 4 : LHD 1KZ-TE * 5 : LHD 5L-E * 6 : LHD 5-Door * 7 : LHD 3-Door
* 8 : LHD 8Way Power Seat * 9 : LHD Except 8Way Power Seat * 10 : RHD 1GR-FE * 11 : RHD 3RZ-FE * 12 : RHD 1KD-FTV
* 13 : RHD 1KZ-TE * 14 : RHD 5L-E * 15 : RHD 5-Door * 16 : RHD 3-Door * 17 : RHD 8Way Power Seat
* 18 : RHD Except 8Way Power Seat

I GROUND POINT (RHD)

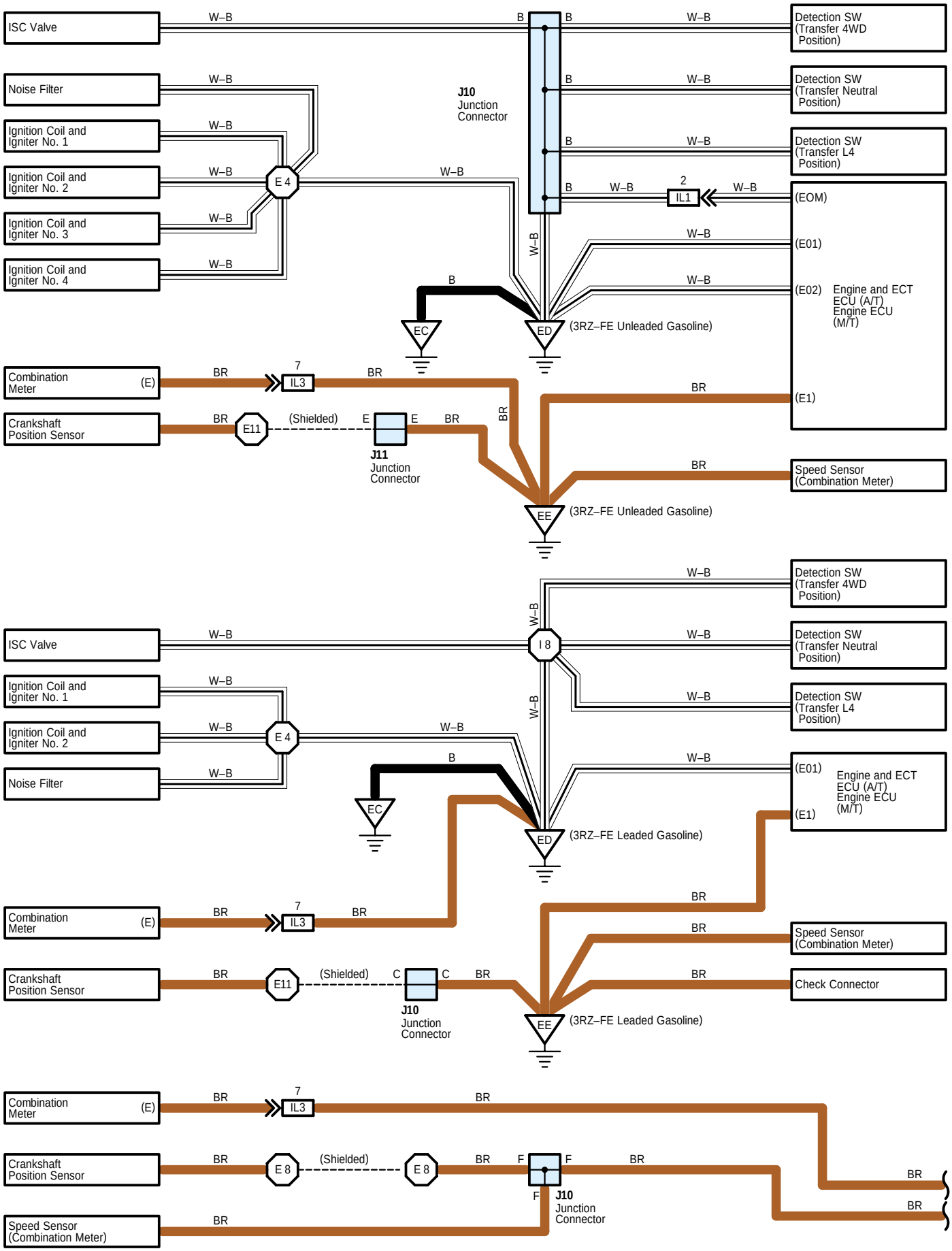

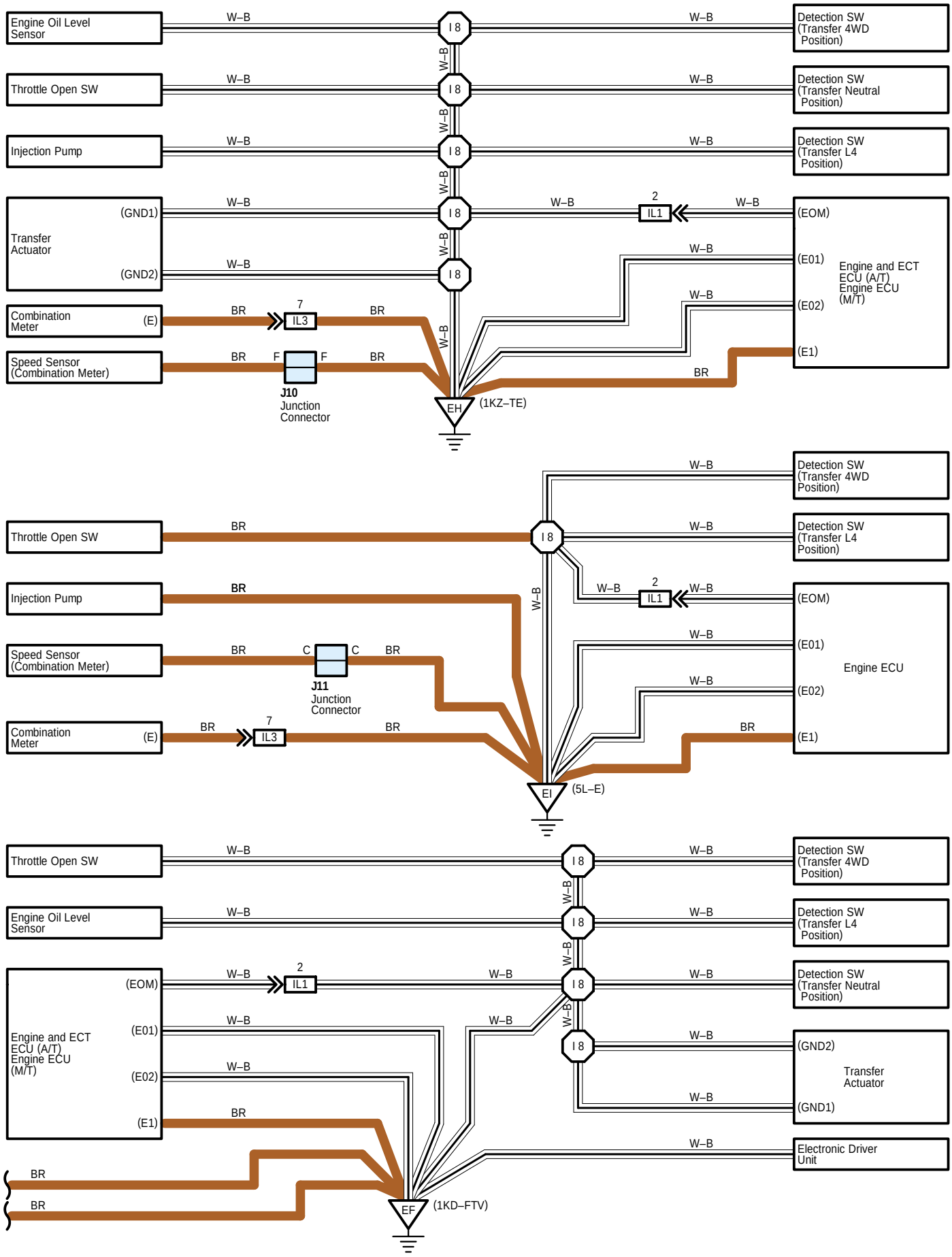
Engine Oil Level Sensor
Throttle Open SW
Injection Pump
Transfer Actuator
(GND1)
(GND2)
Combination Meter
(E)
Speed Sensor (Combination Meter)
W–B
BR
F
7
IL3
2
IL1
I 8
J10
Junction Connector
EH
(1KZ–TE)
Detection SW (Transfer 4WD Position)
Detection SW (Transfer Neutral Position)
Detection SW (Transfer L4 Position)
(EOM)
(E01)
(E02)
(E1)
Engine and ECT ECU (A/T) Engine ECU (M/T)
C
J11
Junction Connector
Engine ECU
EI
(5L–E)
Electronic Driver Unit
EF
(1KD–FTV)

I GROUND POINT (RHD)

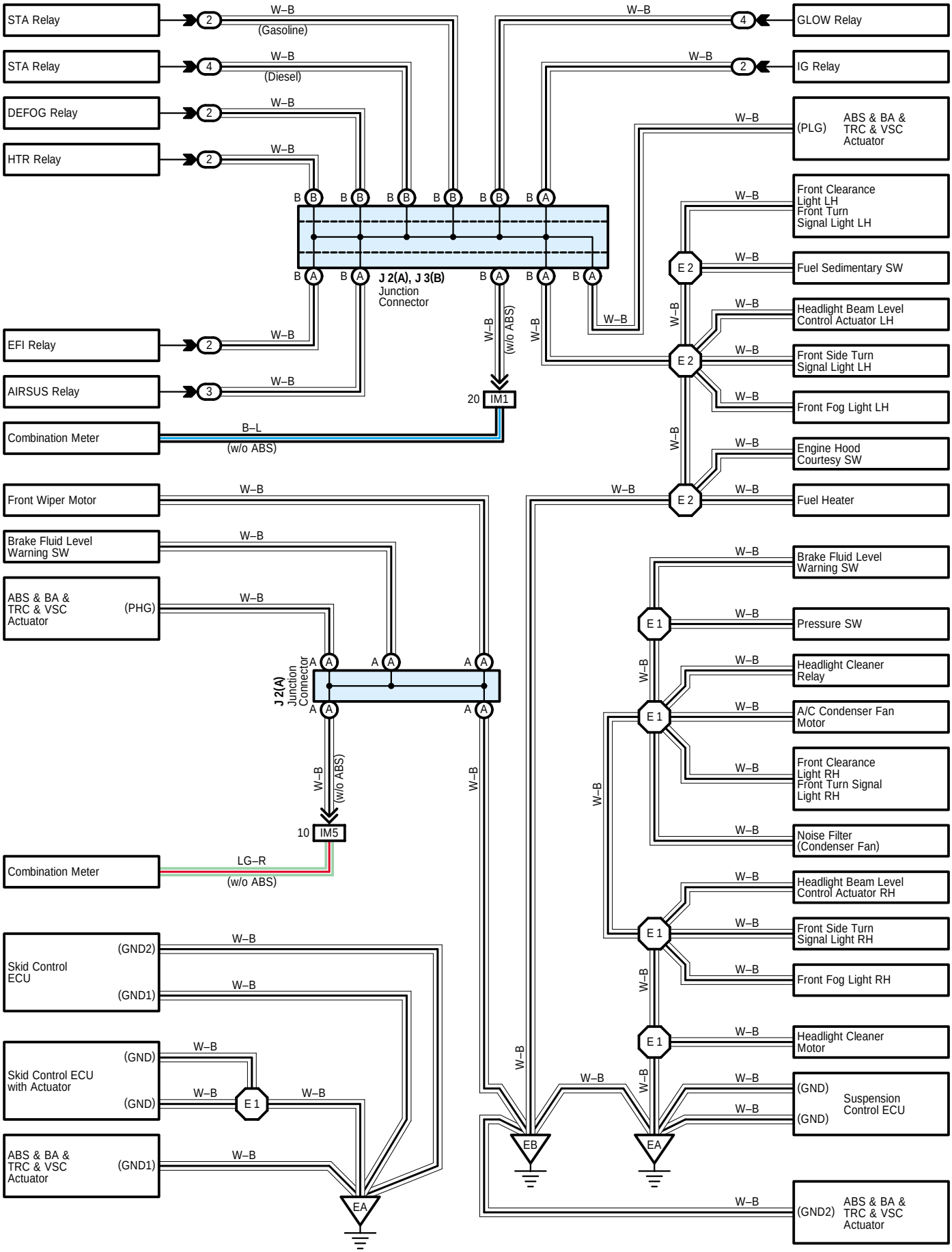

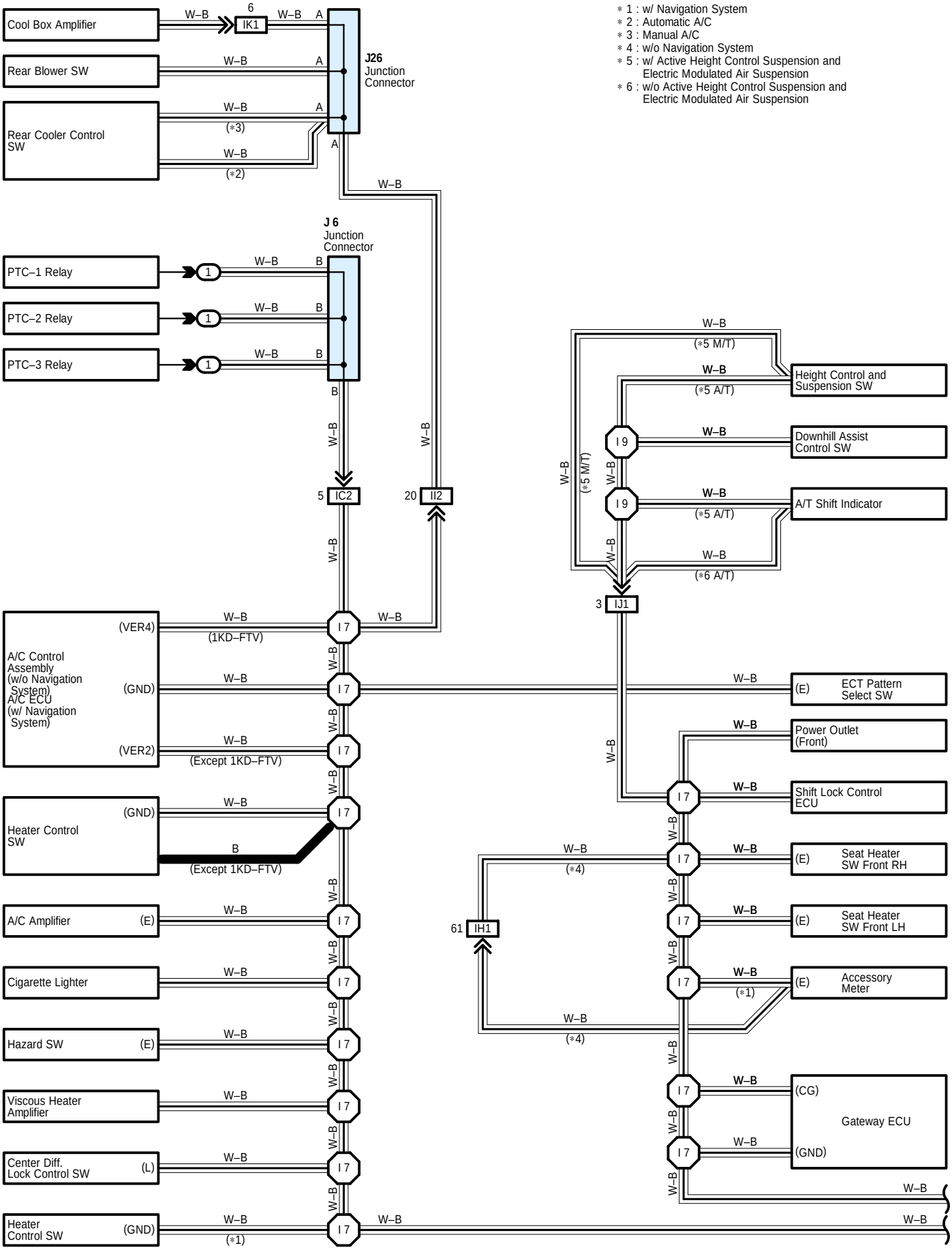
∗1 : w/ Navigation System
∗2 : Automatic A/C
∗3 : Manual A/C
∗4 : w/o Navigation System
∗5 : w/ Active Height Control Suspension and Electric Modulated Air Suspension
∗6 : w/o Active Height Control Suspension and Electric Modulated Air Suspension
Cool Box Amplifier
Rear Blower SW
Rear Cooler Control SW
J26 Junction Connector
J 6 Junction Connector
PTC–1 Relay
PTC–2 Relay
PTC–3 Relay
IK1
IC2
II2
IJ1
IH1
Height Control and Suspension SW
Downhill Assist Control SW
A/T Shift Indicator
A/C Control Assembly (w/o Navigation System)
A/C ECU (w/ Navigation System)
(VER4)
(GND)
(VER2)
(1KD–FTV)
(Except 1KD–FTV)
Heater Control SW
A/C Amplifier
Cigarette Lighter
Hazard SW
Viscous Heater Amplifier
Center Diff. Lock Control SW
ECT Pattern Select SW
Power Outlet (Front)
Shift Lock Control ECU
Seat Heater SW Front RH
Seat Heater SW Front LH
Accessory Meter
Gateway ECU
(CG)
(E)
(L)
W–B

I GROUND POINT (RHD)

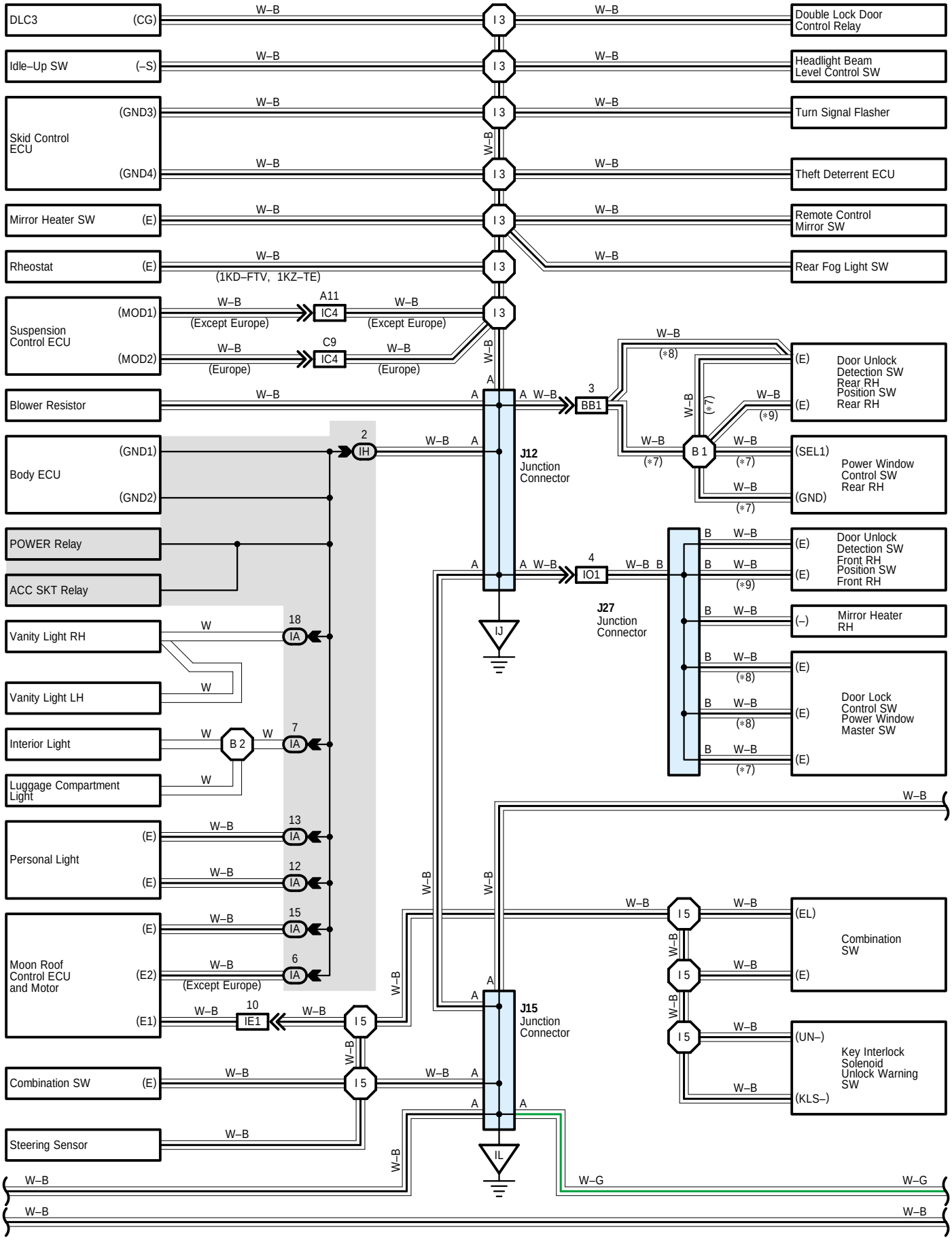

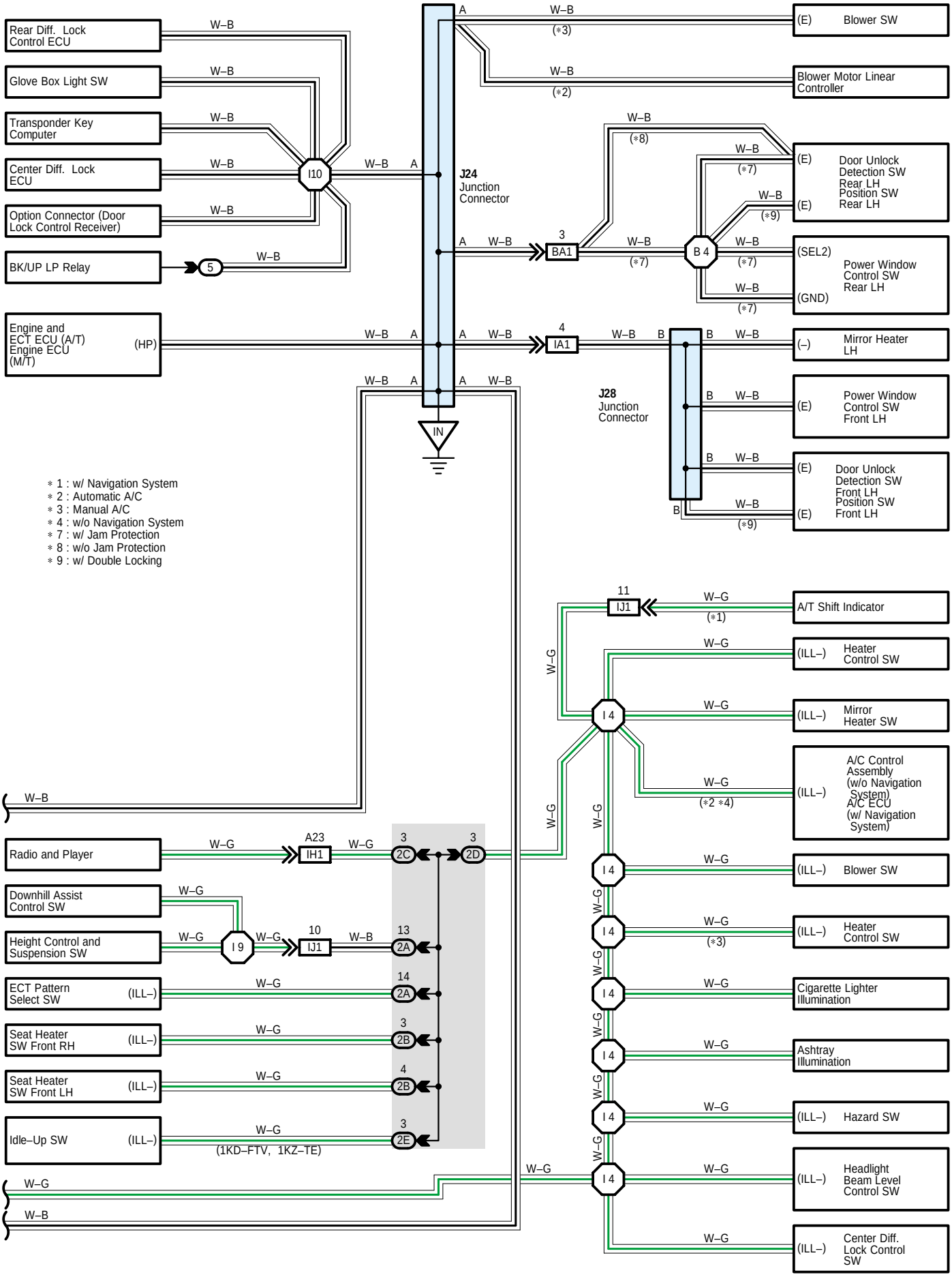
Rear Diff. Lock Control ECU
Glove Box Light SW
Transponder Key Computer
Center Diff. Lock ECU
Option Connector (Door Lock Control Receiver)
BK/UP LP Relay
Engine and ECT ECU (A/T) Engine ECU (M/T)
(HP)
I10
J24 Junction Connector
BA1
IA1
B 4
J28 Junction Connector
IN
Blower SW
Blower Motor Linear Controller
Door Unlock Detection SW Rear LH
Position SW Rear LH
Power Window Control SW Rear LH
Mirror Heater LH
Power Window Control SW Front LH
Door Unlock Detection SW Front LH
Position SW Front LH
∗ 1 : w/ Navigation System
∗ 2 : Automatic A/C
∗ 3 : Manual A/C
∗ 4 : w/o Navigation System
∗ 7 : w/ Jam Protection
∗ 8 : w/o Jam Protection
∗ 9 : w/ Double Locking
A/T Shift Indicator
Heater Control SW
Mirror Heater SW
A/C Control Assembly (w/o Navigation System) A/C ECU (w/ Navigation System)
Blower SW
Heater Control SW
Cigarette Lighter Illumination
Ashtray Illumination
Hazard SW
Headlight Beam Level Control SW
Center Diff. Lock Control SW
Radio and Player
IH1
2C
2D
Downhill Assist Control SW
Height Control and Suspension SW
I 9
IJ1
2A
ECT Pattern Select SW
Seat Heater SW Front RH
2B
Seat Heater SW Front LH
Idle–Up SW
2E
(1KD–FTV, 1KZ–TE)
I 4

I GROUND POINT (RHD)

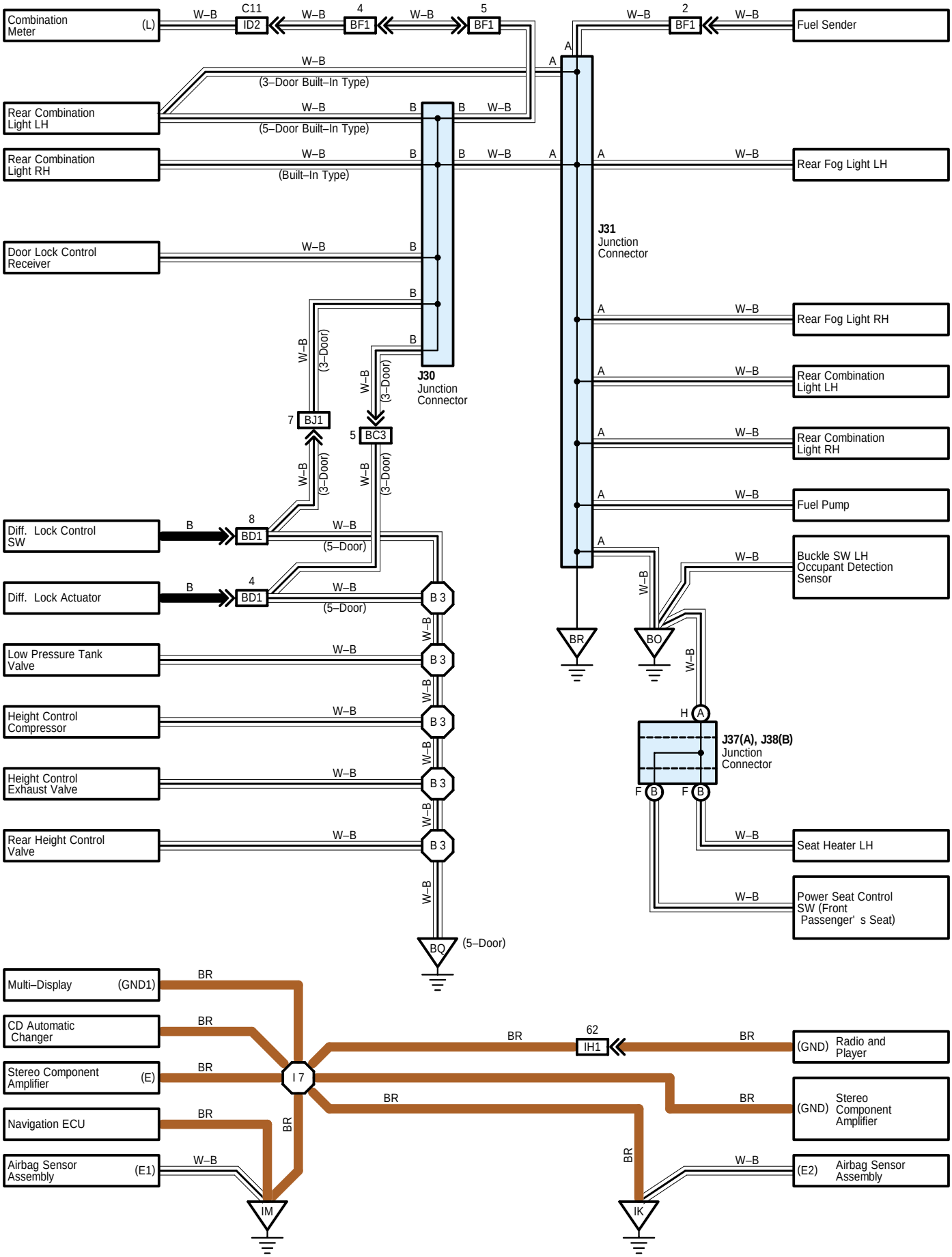

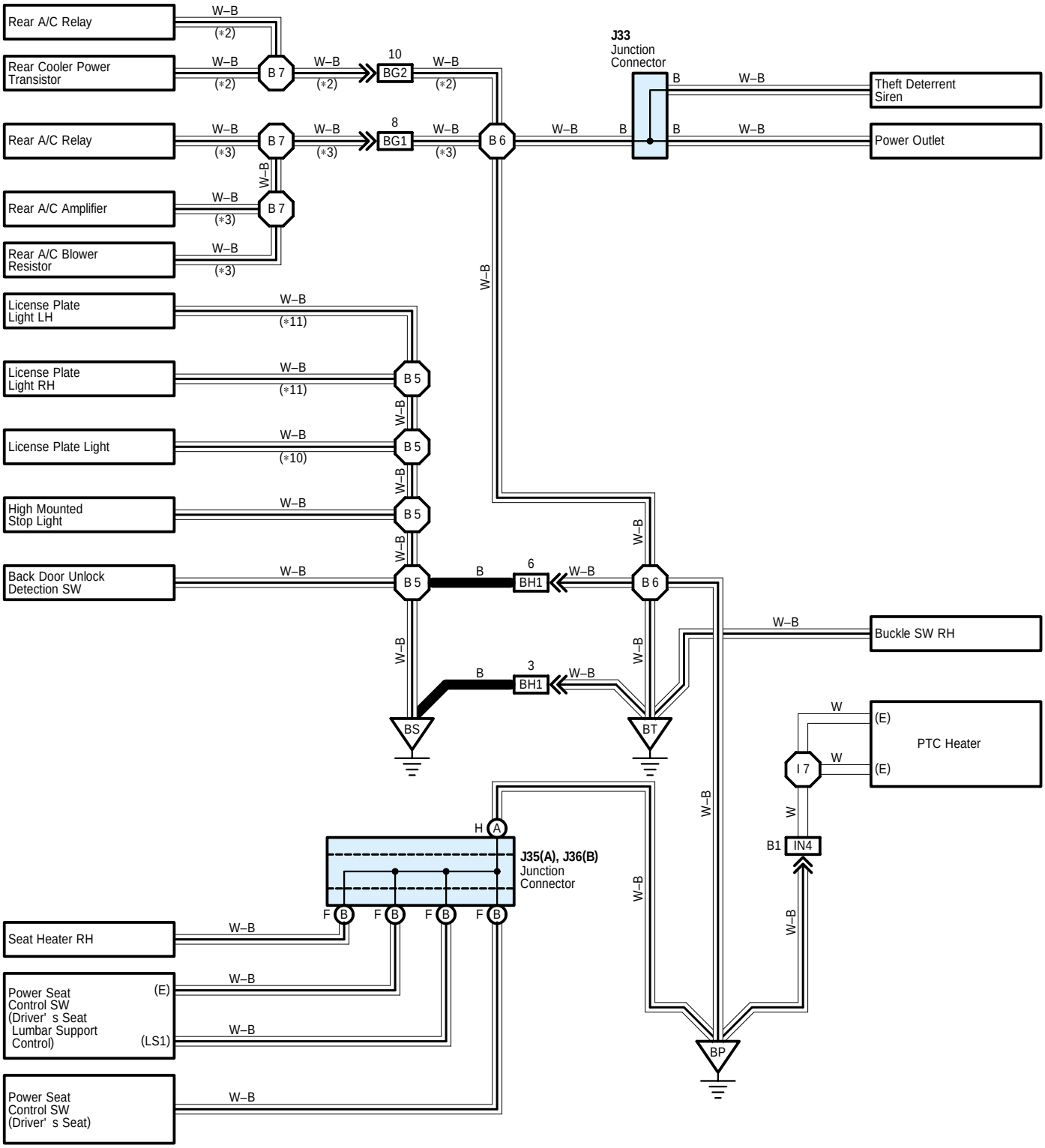

∗ 2 : Automatic A/C
∗ 3 : Manual A/C
∗10 : Spare Tire–Back Door Mounted
∗11 : Spare Tire–Under Floor Mounted

I GROUND POINT (RHD)

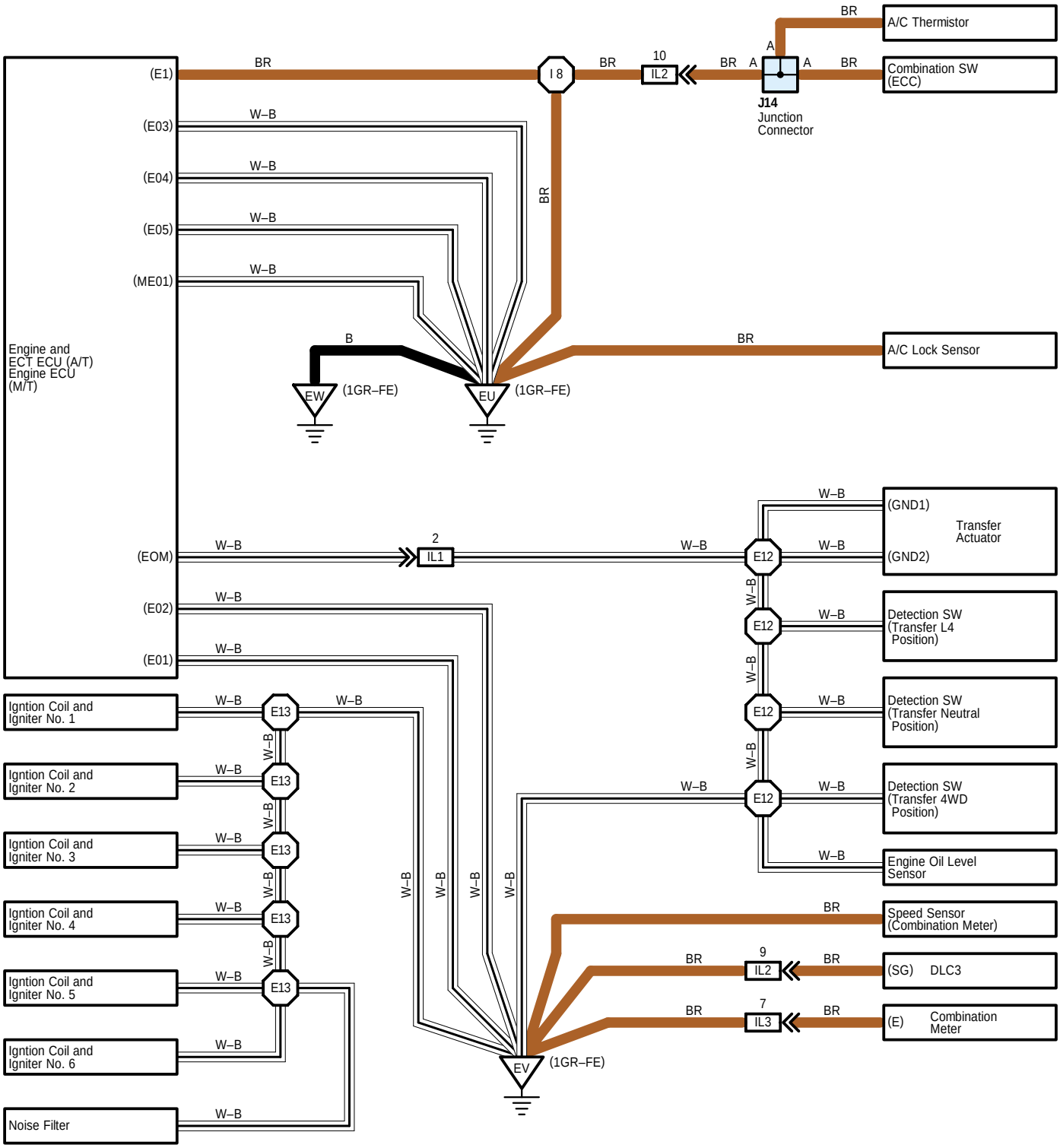

: Parts Location

Code		See Page	Code	See Page	Code		See Page
J2	A	59 (*10)	J6	67 (*14)	J31		72 (*15)
		61 (*11)	J10	70 (RHD)			74 (*16)
		63 (*12)	J11	70 (RHD)	J33		72 (*15)
		65 (*13)	J12	70 (RHD)			74 (*16)
		67 (*14)	J14	70 (RHD)	J35	A	76 (*17)
J3	B	59 (*10)	J15	70 (RHD)			77 (*18)
		61 (*11)	J24	70 (RHD)	J36	B	76 (*17)
		63 (*12)	J26	70 (RHD)			77 (*18)
		65 (*13)	J27	72 (*15)	J37	A	76 (*17)
		67 (*14)		74 (*16)			77 (*18)
J6		59 (*10)	J28	72 (*15)	J38	B	76 (*17)
		61 (*11)		74 (*16)			77 (*18)
		63 (*12)	J30	72 (*15)			
		65 (*13)		74 (*16)			

: Relay Blocks

Code	See Page	Relay Blocks (Relay Block Location)
1	24 (RHD)	Engine Room R/B No.1 (Engine Compartment Left)
2	23	Engine Room R/B (Engine Compartment Left)
3	24	Engine Room R/B No.3 (Engine Compartment Left)
4	25	Engine Room R/B No.4 (Engine Compartment Left)
5	25 (RHD)	Passenger Side R/B (Left Kick Panel)

: Junction Block and Wire Harness Connector

Code	See Page	Junction Block and Wire Harness (Connector Location)
IA	28 (RHD)	Roof Wire and Driver Side J/B (Lower Finish Panel)
IH	29 (RHD)	Instrument Panel Wire and Driver Side J/B (Lower Finish Panel)
2A	34	Instrument Panel Wire and J/B No.2 (Instrument Panel Reinforcement Center)
2B		
2C		
2D		
2E		

* 1 : LHD 1GR-FE * 2 : LHD 3RZ-FE * 3 : LHD 1KD-FTV * 4 : LHD 1KZ-TE * 5 : LHD 5L-E * 6 : LHD 5-Door * 7 : LHD 3-Door
* 8 : LHD 8Way Power Seat * 9 : LHD Except 8Way Power Seat * 10 : RHD 1GR-FE * 11 : RHD 3RZ-FE * 12 : RHD 1KD-FTV
* 13 : RHD 1KZ-TE * 14 : RHD 5L-E * 15 : RHD 5-Door * 16 : RHD 3-Door * 17 : RHD 8Way Power Seat
* 18 : RHD Except 8Way Power Seat

I GROUND POINT (RHD)

: Connector Joining Wire Harness and Wire Harness

Code	See Page	Joining Wire Harness and Wire Harness (Connector Location)
IA1	112 (RHD)	Front Door LH Wire and Instrument Panel Wire (Left Kick Panel)
IC2	112 (RHD)	Instrument Panel Wire and Engine Room Main Wire (Left Kick Panel)
IC4		
ID2	114 (RHD)	Instrument Panel Wire and Floor No.2 Wire (Left Kick Panel)
IE1	114 (RHD)	Roof Wire and Instrument Panel Wire (Left Side of the Driver Side J/B)
IH1	114 (RHD)	Instrument Panel Wire and Instrument Panel No.2 Wire (Instrument Panel Brace LH)
II2	114 (RHD)	Console Box Wire and Instrument Panel Wire (Under the Instrument Panel Brace LH)
IJ1	116 (RHD)	Instrument Panel Wire and Switch Wire (Front Side of the Console Box)
IK1	116 (RHD)	Console Box Wire and A/C Sub Wire (Rear Side of the Console Box)
IL1	116 (RHD)	Engine Wire and Instrument Panel Wire (Left Side of the Blower Unit)
IL2		
IL3		
IM1	116 (RHD)	Instrument Panel Wire and Engine Room Main Wire (Right Kick Panel)
IM5		
IN4	118 (RHD)	Instrument Panel Wire and Floor Wire (Right Kick Panel)
IO1	118 (RHD)	Front Door RH Wire and Instrument Panel Wire (Right Kick Panel)
BA1	120 (*15)	Rear Door LH Wire and Instrument Panel Wire (Center Pillar LH)
BB1	120 (*15)	Rear Door RH Wire and Instrument Panel Wire (Center Pillar RH)
BC3	124 (*16)	Floor No.2 Wire and Frame Wire (Frame Side Rail LH)
BD1	120 (*15)	Frame Wire and Differential Wire (Left Side of the No.6 Cross Member)
	124 (*16)	
BF1	122 (*15)	Floor No.2 Wire and Frame No.2 Wire (Left Side of the Rear Floor)
BG1	122 (*15)	Floor Wire and Rear A/C Sub Wire (Right Quarter Panel Inner)
BG2		
BH1	122 (*15)	Back Door No.1 Wire and Floor Wire (Right Quarter Panel Inner)
	124 (*16)	
BJ1	124 (*16)	Floor No.2 Wire and Frame Wire (Frame Side Rail LH)

* 1 : LHD 1GR-FE * 2 : LHD 3RZ-FE * 3 : LHD 1KD-FTV * 4 : LHD 1KZ-TE * 5 : LHD 5L-E * 6 : LHD 5-Door * 7 : LHD 3-Door
* 8 : LHD 8Way Power Seat * 9 : LHD Except 8Way Power Seat * 10 : RHD 1GR-FE * 11 : RHD 3RZ-FE * 12 : RHD 1KD-FTV
* 13 : RHD 1KZ-TE * 14 : RHD 5L-E * 15 : RHD 5-Door * 16 : RHD 3-Door * 17 : RHD 8Way Power Seat
* 18 : RHD Except 8Way Power Seat

▽ : **Ground Points**

Code	See Page	Ground Points Location
EA	102 (*10)	Front Right Fender
	104 (*11)	
	106 (*12)	
	108 (*13)	
	110 (*14)	
EB	102 (*10)	Front Left Fender
	104 (*11)	
	106 (*12)	
	108 (*13)	
	110 (*14)	
EC	104 (*11)	Near the Air Cleaner
ED	104 (*11)	Ignition Coil Bracket
EE	104 (*11)	Intake Manifold
EF	106 (*12)	Rear Part of Cylinder Block
EH	108 (*13)	
EI	110 (*14)	
EU	102 (*10)	Rear Side of Right Bank Cylinder Block
EV	102 (*10)	Rear Side of Left Bank Cylinder Block
EW	102 (*10)	Near the Washer Tank
IJ	112 (RHD)	Right Kick Panel
IK	112 (RHD)	Near the Right Side of Steering Column
IL	112 (RHD)	Instrument Panel Brace RH
IM		
IN	112 (RHD)	Left Kick Panel
BO	120 (*15)	Under the Front Passenger's Seat
	124 (*16)	
BP	120 (*15)	Under the Driver's Seat
	124 (*16)	
BQ	120 (*15)	Near the Left Side of No.5 Cross Member
BR	120 (*15)	Left Quarter Panel Inner
	124 (*16)	
BS	120 (*15)	Back Door Panel Center
	124 (*16)	
BT	120 (*15)	Right Quarter Panel Inner
	124 (*16)	

* 1 : LHD 1GR-FE * 2 : LHD 3RZ-FE * 3 : LHD 1KD-FTV * 4 : LHD 1KZ-TE * 5 : LHD 5L-E * 6 : LHD 5-Door * 7 : LHD 3-Door
* 8 : LHD 8Way Power Seat * 9 : LHD Except 8Way Power Seat * 10 : RHD 1GR-FE * 11 : RHD 3RZ-FE * 12 : RHD 1KD-FTV
* 13 : RHD 1KZ-TE * 14 : RHD 5L-E * 15 : RHD 5-Door * 16 : RHD 3-Door * 17 : RHD 8Way Power Seat
* 18 : RHD Except 8Way Power Seat

I GROUND POINT (RHD)

: **Splice Points**

Code	See Page	Wire Harness with Splice Points	Code	See Page	Wire Harness with Splice Points
E1	102 (*10)	Engine Room Main Wire	I4	114 (RHD)	Instrument Panel Wire
	104 (*11)		I5		
	106 (*12)		I7		
	108 (*13)		I8	114 (RHD)	Engine Wire
	110 (*14)		I9	114 (RHD)	Switch Wire
E2	102 (*10)		I10	114 (RHD)	Instrument Panel Wire
	104 (*11)		B1	122 (*15)	Rear Door No.1 Wire LH
	106 (*12)		B2	122 (*15)	Roof Wire
	108 (*13)			124 (*16)	
	110 (*14)		B3	122 (*15)	Frame Wire
E4	104 (*11)	Engine Wire	B4	122 (*15)	Rear Door No.1 Wire RH
E8	106 (*12)		B5	122 (*15)	Back Door No.1 Wire
E11	104 (*11)			124 (*16)	
E12	102 (*10)		B6	122 (*15)	Floor Wire
E13				124 (*16)	
I3	114 (RHD)	Instrument Panel Wire	B7	122 (*15)	A/C Sub Wire

* 1 : LHD 1GR-FE * 2 : LHD 3RZ-FE * 3 : LHD 1KD-FTV * 4 : LHD 1KZ-TE * 5 : LHD 5L-E * 6 : LHD 5-Door * 7 : LHD 3-Door
* 8 : LHD 8Way Power Seat * 9 : LHD Except 8Way Power Seat * 10 : RHD 1GR-FE * 11 : RHD 3RZ-FE * 12 : RHD 1KD-FTV
* 13 : RHD 1KZ-TE * 14 : RHD 5L-E * 15 : RHD 5-Door * 16 : RHD 3-Door * 17 : RHD 8Way Power Seat
* 18 : RHD Except 8Way Power Seat

J POWER SOURCE (Current Flow Chart)

The chart below shows the route by which current flows from the battery to each electrical source (Fusible Link, Circuit Breaker, Fuse, etc.) and other Parts.

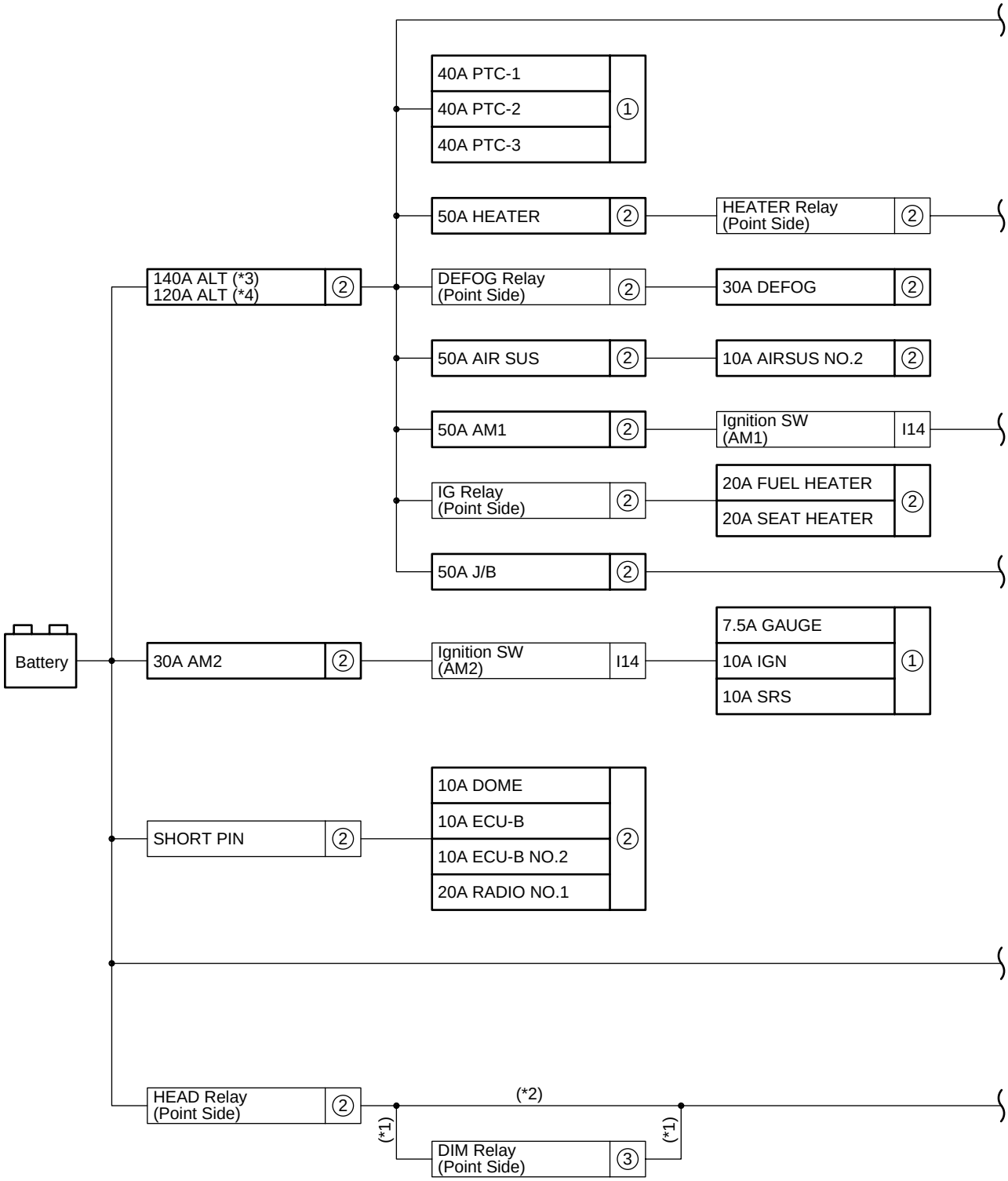

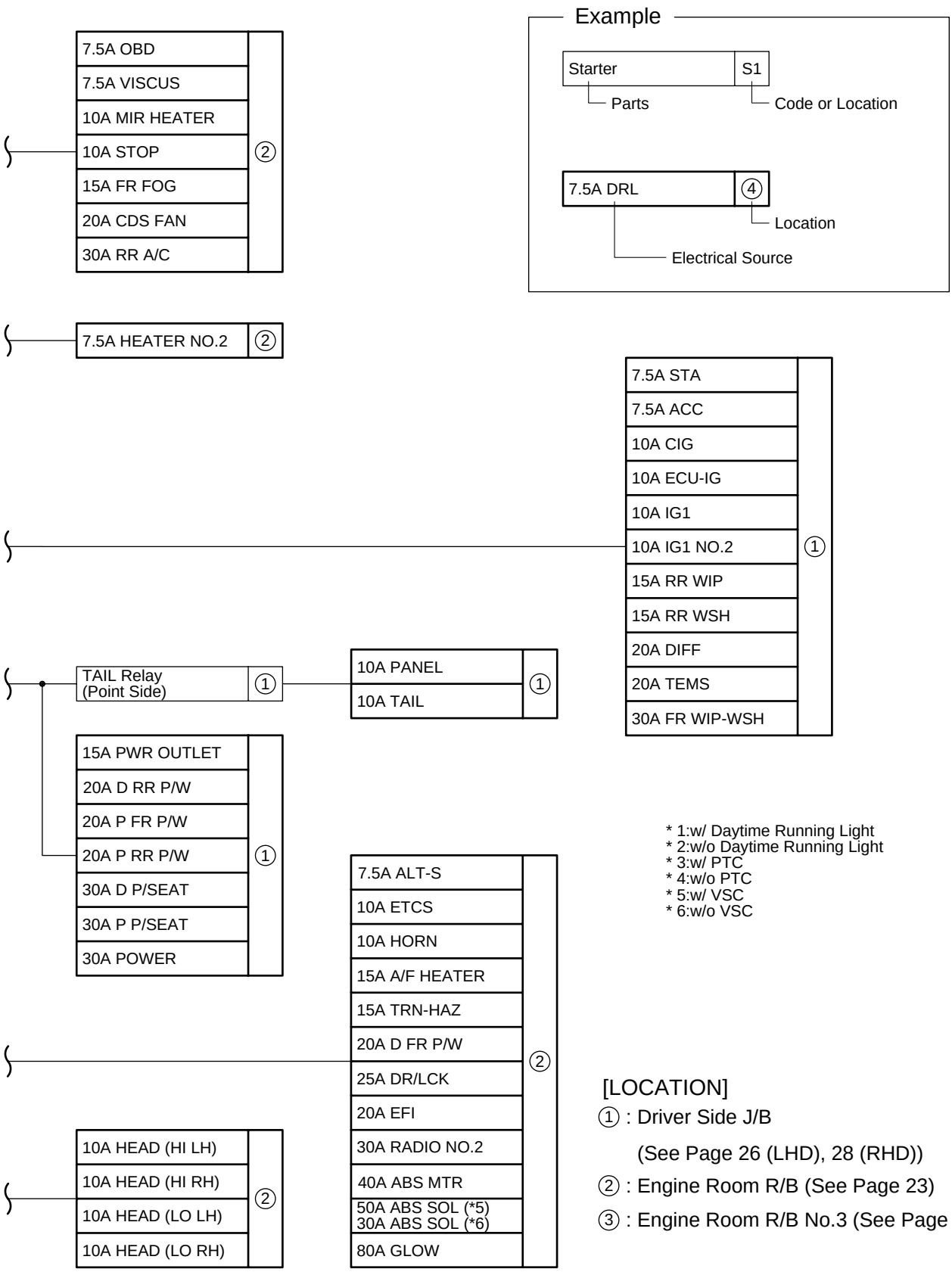
Example
Starter
S1
Parts
Code or Location
7.5A DRL
4
Location
Electrical Source
7.5A OBD
7.5A VISCUS
10A MIR HEATER
10A STOP
15A FR FOG
20A CDS FAN
30A RR A/C
2
7.5A HEATER NO.2
2
7.5A STA
7.5A ACC
10A CIG
10A ECU-IG
10A IG1
10A IG1 NO.2
15A RR WIP
15A RR WSH
20A DIFF
20A TEMS
30A FR WIP-WSH
1
TAIL Relay
(Point Side)
1
10A PANEL
10A TAIL
1
15A PWR OUTLET
20A D RR P/W
20A P FR P/W
20A P RR P/W
30A D P/SEAT
30A P P/SEAT
30A POWER
1
7.5A ALT-S
10A ETCS
10A HORN
15A A/F HEATER
15A TRN-HAZ
20A D FR P/W
25A DR/LCK
20A EFI
30A RADIO NO.2
40A ABS MTR
50A ABS SOL (*5)
30A ABS SOL (*6)
80A GLOW
2
10A HEAD (HI LH)
10A HEAD (HI RH)
10A HEAD (LO LH)
10A HEAD (LO RH)
2
* 1:w/ Daytime Running Light
* 2:w/o Daytime Running Light
* 3:w/ PTC
* 4:w/o PTC
* 5:w/ VSC
* 6:w/o VSC
[LOCATION]
1 : Driver Side J/B
(See Page 26 (LHD), 28 (RHD))
2 : Engine Room R/B (See Page 23)
3 : Engine Room R/B No.3 (See Page 24)

Driver Side J/B (See Page 26 (LHD), 28 (RHD))

Fuse		System	Page
7.5A	ACC	ABS	572
		Accessory Meter	642
		Air Conditioner (Automatic A/C)	694
		Back-Up Light (Diesel)	346
		Back-Up Light (Gasoline)	342
		Cigarette Lighter and Power Outlet	624
		Combination Meter	672
		Cruise Control (1GR-FE)	512
		Cruise Control (1KD-FTV)	520
		Cruise Control (1KZ-TE)	528
		Door Lock Control and Theft Deterrent (LHD)	426
		Door Lock Control and Theft Deterrent (RHD)	438
		Double Locking	450
		ECT and A/T Indicator (1GR-FE)	458
		ECT and A/T Indicator (1KZ-TE)	500
		ECT and A/T Indicator (3RZ-FE Unleaded Gasoline)	470
		Engine Control (1GR-FE)	162
		Engine Control (1KZ-TE)	210
		Engine Control (3RZ-FE Unleaded Gasoline)	174
		Headlight (w/ Daytime Running Light)	288
		Headlight (w/o Daytime Running Light)	294
		Interior Light	318
		Key Reminder and Seat Belt Warning	350
		Light Auto Turn Off	306
		Moon Roof	608
		Multiplex Communication System (LHD)	240
		Multiplex Communication System (RHD)	264
		Navigation System (LHD)	648
		Navigation System (RHD)	654
		Option Connector (Wireless Door Lock Control)	418
		Power Window (LHD w/ Jam Protection)	370
		Power Window (LHD w/o Jam Protection)	378
		Power Window (RHD w/ Jam Protection)	384
		Power Window (RHD w/o Jam Protection)	392
		Radio and Player (Built-in Type Amplifier)	668
		Radio and Player (Separate Type Amplifier)	660
		Rear Differential Lock	596
		Remote Control Mirror	614
		Shift Lock	590
		Trailer Towing	636
		VSC (RHD)	562
		Wireless Door Lock Control (LHD)	398

∗ These are the page numbers of the first page on which the related system is shown.

Fuse		System	Page
7.5A	ACC	Wireless Door Lock Control (RHD)	408
		4WD	604
7.5A	GAUGE	ABS	572
		Accessory Meter	642
		Active Height Control Suspension and Electric Modulated Air Suspension	580
		Air Conditioner (Automatic A/C)	694
		Center Differential Lock	592
		Charging (Gasoline)	152
		Charging (1KD−FTV)	154
		Charging (1KZ−TE, 5L−E)	158
		Combination Meter	672
		Cruise Control (1GR−FE)	512
		Cruise Control (1KD−FTV)	520
		Cruise Control (1KZ−TE)	528
		Door Lock Control and Theft Deterrent (LHD)	426
		Door Lock Control and Theft Deterrent (RHD)	438
		ECT and A/T Indicator (1GR−FE)	458
		ECT and A/T Indicator (1KD−FTV)	488
		ECT and A/T Indicator (1KZ−TE)	500
		ECT and A/T Indicator (3RZ−FE Leaded Gasoline)	480
		ECT and A/T Indicator (3RZ−FE Unleaded Gasoline)	470
		Engine Control (1GR−FE)	162
		Engine Control (1KD−FTV)	196
		Engine Control (1KZ−TE)	210
		Engine Control (3RZ−FE Leaded Gasoline)	186
		Engine Control (3RZ−FE Unleaded Gasoline)	174
		Engine Control (5L−E)	222
		Interior Light	318
		Key Reminder and Seat Belt Warning	350
		Moon Roof	608
		Multiplex Communication System (LHD)	240
		Multiplex Communication System (RHD)	264
		Navigation System (LHD)	648
		Navigation System (RHD)	654
		Radio and Player (Separate Type Amplifier)	660
		Rear Differential Lock	596
		SRS	535
		Taillight and Illumination	326
		Viscous Heater	688
		VSC (LHD A/T)	542
		VSC (LHD M/T)	552
		VSC (RHD)	562
		4WD	604

∗ These are the page numbers of the first page on which the related system is shown.

Fuse		System	Page
7.5A	STA	ECT and A/T Indicator (1GR-FE)	458
		ECT and A/T Indicator (1KD-FTV)	488
		ECT and A/T Indicator (1KZ-TE)	500
		ECT and A/T Indicator (3RZ-FE Leaded Gasoline)	480
		ECT and A/T Indicator (3RZ-FE Unleaded Gasoline)	470
		Engine Control (1GR-FE)	162
		Engine Control (1KD-FTV)	196
		Engine Control (1KZ-TE)	210
		Engine Control (3RZ-FE Leaded Gasoline)	186
		Engine Control (3RZ-FE Unleaded Gasoline)	174
		Engine Control (5L-E)	222
		Starting (Diesel)	138
		Starting (1GR-FE)	132
		Starting (3RZ-FE)	134
10A	CIG	Cigarette Lighter and Power Outlet	624
10A	ECU-IG	ABS	572
		Accessory Meter	642
		Active Height Control Suspension and Electric Modulated Air Suspension	580
		Door Lock Control and Theft Deterrent (LHD)	426
		Door Lock Control and Theft Deterrent (RHD)	438
		Double Locking	450
		Engine Immobiliser (Except 3RZ-FE Unleaded Gasoline)	236
		Engine Immobiliser (3RZ-FE Unleaded Gasoline)	232
		Headlight (w/ Daytime Running Light)	288
		Headlight (w/o Daytime Running Light)	294
		Interior Light	318
		Key Reminder and Seat Belt Warning	350
		Light Auto Turn Off	306
		Moon Roof	608
		Multiplex Communication System (LHD)	240
		Multiplex Communication System (RHD)	264
		Navigation System (LHD)	648
		Navigation System (RHD)	654
		Option Connector (Wireless Door Lock Control)	418
		Power Window (LHD w/ Jam Protection)	370
		Power Window (LHD w/o Jam Protection)	378
		Power Window (RHD w/ Jam Protection)	384
		Power Window (RHD w/o Jam Protection)	392
		Shift Lock	590
		Stop Light	338
		Trailer Towing	636
		VSC (LHD A/T)	542
		VSC (LHD M/T)	552
		VSC (RHD)	562

∗ These are the page numbers of the first page on which the related system is shown.

Fuse		System	Page
10A	ECU-IG	Wireless Door Lock Control (LHD)	398
		Wireless Door Lock Control (RHD)	408
10A	IGN	Cruise Control (1GR-FE)	512
		Cruise Control (1KD-FTV)	520
		Cruise Control (1KZ-TE)	528
		ECT and A/T Indicator (1GR-FE)	458
		ECT and A/T Indicator (1KD-FTV)	488
		ECT and A/T Indicator (1KZ-TE)	500
		ECT and A/T Indicator (3RZ-FE Leaded Gasoline)	480
		ECT and A/T Indicator (3RZ-FE Unleaded Gasoline)	470
		Engine Control (1GR-FE)	162
		Engine Control (1KD-FTV)	196
		Engine Control (1KZ-TE)	210
		Engine Control (3RZ-FE Leaded Gasoline)	186
		Engine Control (3RZ-FE Unleaded Gasoline)	174
		Engine Control (5L-E)	222
		VSC (LHD A/T)	542
		VSC (LHD M/T)	552
		VSC (RHD)	562
10A	IG1	Air Conditioner (Automatic A/C)	694
		Air Conditioner (Manual A/C Except 1GR-FE)	712
		Air Conditioner (Manual A/C 1GR-FE)	708
		Charging (Gasoline)	152
		Condenser Fan	684
		Cruise Control (1KD-FTV)	520
		Cruise Control (1KZ-TE)	528
		Rear Window Defogger	620
10A	IG1 NO.2	ABS	572
		Accessory Meter	642
		Air Conditioner (Automatic A/C)	694
		Air Conditioner (Manual A/C Except 1GR-FE)	712
		Air Conditioner (Manual A/C 1GR-FE)	708
		Back-Up Light (Diesel)	346
		Back-Up Light (Gasoline)	342
		Charging (1KD-FTV)	154
		Charging (1KZ-TE, 5L-E)	158
		Combination Meter	672
		Cooler Box	726
		Cruise Control (1GR-FE)	512
		Cruise Control (1KD-FTV)	520
		Cruise Control (1KZ-TE)	528
		ECT and A/T Indicator (1GR-FE)	458
		ECT and A/T Indicator (1KD-FTV)	488
		ECT and A/T Indicator (1KZ-TE)	500

∗ These are the page numbers of the first page on which the related system is shown.

Fuse		System	Page
10A	IG1 NO.2	ECT and A/T Indicator (3RZ−FE Leaded Gasoline)	480
		ECT and A/T Indicator (3RZ−FE Unleaded Gasoline)	470
		Engine Control (1GR−FE)	162
		Engine Control (1KD−FTV)	196
		Engine Control (1KZ−TE)	210
		Engine Control (3RZ−FE Leaded Gasoline)	186
		Engine Control (3RZ−FE Unleaded Gasoline)	174
		Engine Control (5L−E)	222
		Key Reminder and Seat Belt Warning	350
		Mirror Heater	616
		Moon Roof	608
		Multiplex Communication System (LHD)	240
		Multiplex Communication System (RHD)	264
		Navigation System (LHD)	648
		Navigation System (RHD)	654
		Radio and Player (Separate Type Amplifier)	660
		Rear Air Conditioner (Automatic A/C)	718
		Rear Air Conditioner (Manual A/C)	722
		Rear Differential Lock	596
		Seat Heater	632
		Taillight and Illumination	326
		Trailer Towing	636
		Turn Signal and Hazard Warning Light	312
		Viscous Heater	688
		VSC (LHD A/T)	542
		VSC (LHD M/T)	552
		VSC (RHD)	562
		4WD	604
10A	PANEL	Headlight (w/ Daytime Running Light)	288
		Multiplex Communication System (LHD)	240
		Multiplex Communication System (RHD)	264
		Taillight and Illumination	326
10A	SRS	SRS	535
10A	TAIL	Front Fog Light	298
		Taillight and Illumination	326
		Trailer Towing	636
15A	PWR OUTLET	Cigarette Lighter and Power Outlet	624
15A	RR WIP	Rear Wiper and Washer	368
15A	RR WSH	Rear Wiper and Washer	368
20A	D RR P/W	Multiplex Communication System (LHD)	240
		Multiplex Communication System (RHD)	264
		Power Window (LHD w/ Jam Protection)	370
		Power Window (RHD w/ Jam Protection)	384

∗ These are the page numbers of the first page on which the related system is shown.

Fuse		System	Page
20A	DIFF	Center Differential Lock	592
		Rear Differential Lock	596
20A	P FR P/W	Multiplex Communication System (LHD)	240
		Multiplex Communication System (RHD)	264
		Power Window (LHD w/ Jam Protection)	370
		Power Window (RHD w/ Jam Protection)	384
20A	P RR P/W	Multiplex Communication System (LHD)	240
		Multiplex Communication System (RHD)	264
		Power Window (LHD w/ Jam Protection)	370
		Power Window (RHD w/ Jam Protection)	384
20A	TEMS	Active Height Control Suspension and Electric Modulated Air Suspension	580
30A	D P/SEAT	Power Seat	628
30A	FR WIP−WSH	Front Wiper and Washer	364
		Headlight Cleaner	360
30A	P P/SEAT	Power Seat	628
30A	POWER	Moon Roof	608
		Multiplex Communication System (LHD)	240
		Multiplex Communication System (RHD)	264
		Power Window (LHD w/o Jam Protection)	378
		Power Window (RHD w/o Jam Protection)	392

Engine Room R/B (See Page 23)

Fuse		System	Page
7.5A	ALT−S	Charging (Gasoline)	152
		Charging (1KD−FTV)	154
		Charging (1KZ−TE, 5L−E)	158
7.5A	HEATER NO.2	Air Conditioner (Automatic A/C)	694
		Air Conditioner (Manual A/C Except 1GR−FE)	712
		Air Conditioner (Manual A/C 1GR−FE)	708
		Viscous Heater	688
7.5A	OBD	Engine Control (1GR−FE)	162
		Engine Control (1KD−FTV)	196
		Engine Control (1KZ−TE)	210
		Engine Control (3RZ−FE Unleaded Gasoline)	174
		Engine Control (5L−E)	222
7.5A	VISCUS	Viscous Heater	688
10A	AIRSUS NO.2	Active Height Control Suspension and Electric Modulated Air Suspension	580
10A	DOME	Accessory Meter	642
		Active Height Control Suspension and Electric Modulated Air Suspension	580
		Air Conditioner (Automatic A/C)	694
		Combination Meter	672

∗ These are the page numbers of the first page on which the related system is shown.

Fuse		System	Page
10A	DOME	Cruise Control (1GR−FE)	512
		Cruise Control (1KD−FTV)	520
		Cruise Control (1KZ−TE)	528
		Door Lock Control and Theft Deterrent (LHD)	426
		Door Lock Control and Theft Deterrent (RHD)	438
		ECT and A/T Indicator (1GR−FE)	458
		ECT and A/T Indicator (1KD−FTV)	488
		ECT and A/T Indicator (1KZ−TE)	500
		ECT and A/T Indicator (3RZ−FE Leaded Gasoline)	480
		ECT and A/T Indicator (3RZ−FE Unleaded Gasoline)	470
		Engine Control (1GR−FE)	162
		Engine Control (1KD−FTV)	196
		Engine Control (1KZ−TE)	210
		Engine Control (3RZ−FE Leaded Gasoline)	186
		Engine Control (3RZ−FE Unleaded Gasoline)	174
		Engine Control (5L−E)	222
		Interior Light	318
		Key Reminder and Seat Belt Warning	350
		Moon Roof	608
		Multiplex Communication System (LHD)	240
		Multiplex Communication System (RHD)	264
		Navigation System (LHD)	648
		Navigation System (RHD)	654
		Option Connector (Wireless Door Lock Control)	418
		Radio and Player (Separate Type Amplifier)	660
		Rear Differential Lock	596
		Taillight and Illumination	326
		Viscous Heater	688
		VSC (LHD A/T)	542
		VSC (RHD)	562
		Wireless Door Lock Control (LHD)	398
		Wireless Door Lock Control (RHD)	408
10A	ECU−B	Accessory Meter	642
		Active Height Control Suspension and Electric Modulated Air Suspension	580
		Air Conditioner (Automatic A/C)	694
		Cooler Box	726
		Door Lock Control and Theft Deterrent (LHD)	426
		Door Lock Control and Theft Deterrent (RHD)	438
		Double Locking	450
		Engine Immobiliser (Except 3RZ−FE Unleaded Gasoline)	236
		Engine Immobiliser (3RZ−FE Unleaded Gasoline)	232
		Headlight (w/ Daytime Running Light)	288
		Headlight (w/o Daytime Running Light)	294
		Interior Light	318

∗ These are the page numbers of the first page on which the related system is shown.

Fuse		System	Page
10A	ECU-B	Key Reminder and Seat Belt Warning	350
		Light Auto Turn Off	306
		Multiplex Communication System (LHD)	240
		Multiplex Communication System (RHD)	264
		Navigation System (LHD)	648
		Navigation System (RHD)	654
		Option Connector (Wireless Door Lock Control)	418
		Power Window (LHD w/ Jam Protection)	370
		Power Window (LHD w/o Jam Protection)	378
		Power Window (RHD w/ Jam Protection)	384
		Power Window (RHD w/o Jam Protection)	392
		Rear Air Conditioner (Automatic A/C)	718
		Rear Fog Light	302
		VSC (LHD A/T)	542
		VSC (LHD M/T)	552
		VSC (RHD)	562
		Wireless Door Lock Control (LHD)	398
		Wireless Door Lock Control (RHD)	408
10A	ECU-B NO.2	Door Lock Control and Theft Deterrent (LHD)	426
		Door Lock Control and Theft Deterrent (RHD)	438
		Multiplex Communication System (LHD)	240
		Multiplex Communication System (RHD)	264
10A	ETCS	Cruise Control (1GR-FE)	512
		ECT and A/T Indicator (1GR-FE)	458
		Engine Control (1GR-FE)	162
10A	HEAD(HI LH)	Headlight (w/ Daytime Running Light)	288
		Headlight (w/o Daytime Running Light)	294
		Headlight Beam Level Control	356
		Multiplex Communication System (LHD)	240
		Multiplex Communication System (RHD)	264
10A	HEAD(HI RH)	Combination Meter	672
		Headlight (w/ Daytime Running Light)	288
		Headlight (w/o Daytime Running Light)	294
		Multiplex Communication System (LHD)	240
		Multiplex Communication System (RHD)	264
		Viscous Heater	688
10A	HEAD(LO LH)	Headlight (w/ Daytime Running Light)	288
		Headlight Beam Level Control	356
		Multiplex Communication System (LHD)	240
		Viscous Heater	688
10A	HEAD(LO RH)	Headlight (w/ Daytime Running Light)	288
		Multiplex Communication System (LHD)	240
10A	HORN	Door Lock Control and Theft Deterrent (LHD)	426
		Door Lock Control and Theft Deterrent (RHD)	438

∗ These are the page numbers of the first page on which the related system is shown.

Fuse		System	Page
10A	HORN	Horn	626
		Multiplex Communication System (LHD)	240
		Multiplex Communication System (RHD)	264
10A	MIR HEATER	Mirror Heater	616
10A	STOP	ABS	572
		Active Height Control Suspension and Electric Modulated Air Suspension	580
		Cruise Control (1GR-FE)	512
		Cruise Control (1KD-FTV)	520
		Cruise Control (1KZ-TE)	528
		ECT and A/T Indicator (1GR-FE)	458
		ECT and A/T Indicator (1KD-FTV)	488
		ECT and A/T Indicator (1KZ-TE)	500
		ECT and A/T Indicator (3RZ-FE Leaded Gasoline)	480
		ECT and A/T Indicator (3RZ-FE Unleaded Gasoline)	470
		Engine Control (1GR-FE)	162
		Engine Control (1KD-FTV)	196
		Engine Control (1KZ-TE)	210
		Engine Control (3RZ-FE Leaded Gasoline)	186
		Engine Control (3RZ-FE Unleaded Gasoline)	174
		Engine Control (5L-E)	222
		Shift Lock	590
		Stop Light	338
		Trailer Towing	636
		VSC (LHD A/T)	542
		VSC (LHD M/T)	552
		VSC (RHD)	562
15A	A/F HEATER	Engine Control (1GR-FE)	162
15A	FR FOG	Front Fog Light	298
15A	TRN-HAZ	Trailer Towing	636
		Turn Signal and Hazard Warning Light	312
20A	CDS FAN	Condenser Fan	684
20A	D FR P/W	Door Lock Control and Theft Deterrent (LHD)	426
		Door Lock Control and Theft Deterrent (RHD)	438
		Double Locking	450
		Multiplex Communication System (LHD)	240
		Multiplex Communication System (RHD)	264
		Option Connector (Wireless Door Lock Control)	418
		Power Window (LHD w/ Jam Protection)	370
		Power Window (RHD w/ Jam Protection)	384
		Wireless Door Lock Control (LHD)	398
		Wireless Door Lock Control (RHD)	408
20A	EFI	Cruise Control (1GR-FE)	512
		Cruise Control (1KD-FTV)	520

∗ These are the page numbers of the first page on which the related system is shown.

Fuse		System	Page
20A	EFI	Cruise Control (1KZ–TE)	528
		ECT and A/T Indicator (1GR–FE)	458
		ECT and A/T Indicator (1KD–FTV)	488
		ECT and A/T Indicator (1KZ–TE)	500
		ECT and A/T Indicator (3RZ–FE Leaded Gasoline)	480
		ECT and A/T Indicator (3RZ–FE Unleaded Gasoline)	470
		Engine Control (1GR–FE)	162
		Engine Control (1KD–FTV)	196
		Engine Control (1KZ–TE)	210
		Engine Control (3RZ–FE Leaded Gasoline)	186
		Engine Control (3RZ–FE Unleaded Gasoline)	174
		Engine Control (5L–E)	222
20A	FUEL HEATER	Fuel Heater	160
20A	RADIO NO.1	Navigation System (LHD)	648
		Navigation System (RHD)	654
		Radio and Player (Built–in Type Amplifier)	668
		Radio and Player (Separate Type Amplifier)	660
20A	SEAT HEATER	Seat Heater	632
25A	DR/LCK	Door Lock Control and Theft Deterrent (LHD)	426
		Door Lock Control and Theft Deterrent (RHD)	438
		Double Locking	450
		Multiplex Communication System (LHD)	240
		Multiplex Communication System (RHD)	264
		Option Connector (Wireless Door Lock Control)	418
		Power Window (LHD w/ Jam Protection)	370
		Power Window (LHD w/o Jam Protection)	378
		Power Window (RHD w/ Jam Protection)	384
		Power Window (RHD w/o Jam Protection)	392
		Wireless Door Lock Control (LHD)	398
		Wireless Door Lock Control (RHD)	408
30A	ABS SOL	ABS	572
30A	AM2	Charging (Gasoline)	152
		Charging (1KD–FTV)	154
		Charging (1KZ–TE, 5L–E)	158
		Combination Meter	672
		Engine Control (1GR–FE)	162
		Engine Control (3RZ–FE Leaded Gasoline)	186
		Engine Control (3RZ–FE Unleaded Gasoline)	174
		Ignition (1GR–FE)	142
		Ignition (3RZ–FE Leaded Gasoline)	150
		Ignition (3RZ–FE Unleaded Gasoline)	146
		Starting (Diesel)	138
		Starting (1GR–FE)	132
		Starting (3RZ–FE)	134

∗ These are the page numbers of the first page on which the related system is shown.

Fuse		System	Page
30A	DEFOG	Engine Control (1GR−FE)	162
		Multiplex Communication System (LHD)	240
		Multiplex Communication System (RHD)	264
		Rear Window Defogger	620
30A	RADIO NO.2	Navigation System (LHD)	648
		Navigation System (RHD)	654
		Radio and Player (Separate Type Amplifier)	660
30A	RR A/C	Rear Air Conditioner (Automatic A/C)	718
		Rear Air Conditioner (Manual A/C)	722
30A	TOWING	Trailer Towing	636
40A	ABS MTR	ABS	572
		VSC (LHD A/T)	542
		VSC (LHD M/T)	552
		VSC (RHD)	562
40A	PTC−1	Viscous Heater	688
40A	PTC−2	Viscous Heater	688
40A	PTC−3	Viscous Heater	688
50A	ABS SOL	VSC (LHD A/T)	542
		VSC (LHD M/T)	552
		VSC (RHD)	562
50A	AIR SUS	Active Height Control Suspension and Electric Modulated Air Suspension	580
50A	AM1	Charging (Gasoline)	152
		Charging (1KD−FTV)	154
		Charging (1KZ−TE, 5L−E)	158
		Headlight Cleaner	360
		Starting (Diesel)	138
		Starting (1GR−FE)	132
		Starting (3RZ−FE)	134
50A	HEATER	Air Conditioner (Automatic A/C)	694
		Air Conditioner (Manual A/C Except 1GR−FE)	712
		Air Conditioner (Manual A/C 1GR−FE)	708
50A	J/B	Door Lock Control and Theft Deterrent (LHD)	426
		Door Lock Control and Theft Deterrent (RHD)	438
		Light Auto Turn Off	306
		Multiplex Communication System (LHD)	240
		Multiplex Communication System (RHD)	264
		Taillight and Illumination	326
80A	GLOW	Engine Control (1KD−FTV)	196
		Engine Control (1KZ−TE)	210
		Engine Control (5L−E)	222
120A	ALT (w/o PTC)	Charging (1KD−FTV)	154
		Charging (1KZ−TE, 5L−E)	158

∗ These are the page numbers of the first page on which the related system is shown.

Fuse		System	Page
120A	ALT (w/o PTC)	Rear Window Defogger	620
		Starting (Diesel)	138
		Starting (1GR−FE)	132
		Starting (3RZ−FE)	134
		Charging (Gasoline)	152
140A	ALT (w/ PTC)	Charging (1KD−FTV)	154
		Rear Window Defogger	620
		Starting (Diesel)	138

∗ These are the page numbers of the first page on which the related system is shown.

K CONNECTOR LIST

*1 : 1KD-FTV, 1KZ-TE
*2 : 1KD-FTV, 1GR-FE
*3 : 3RZ-FE Unleaded Gasoline
*4 : 3RZ-FE, 1KZ-TE, 5L-E

A 1
Black

A 2
Black

A 3
Gray

A 4
Gray

A 5

A 6
(1GR-FE) Gray

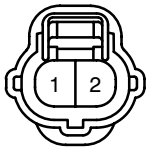

A 6
(*1)

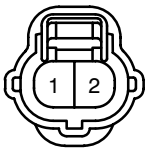

A 6
(3RZ-FE) Gray

A 7

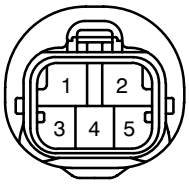

A 8
Gray

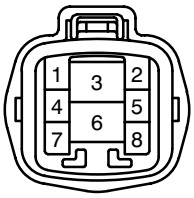

A 9
Black

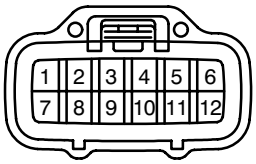

A10
Gray

A11
Gray

A12
Gray

A13
Gray

A14
(*2) Black

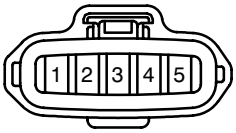

A14
(*3) Black

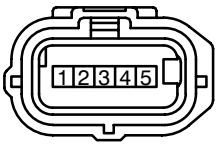

A15
Black

A16
Yellow

A17
Yellow

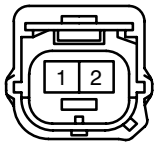

A18
(1GR-FE)

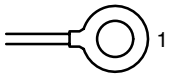

A18
(1KD-FTV)

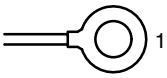

A18
(*4)

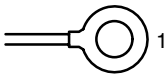

A19
(1KD-FTV) Black

A19
(1KZ-TE, 5L-E) Black

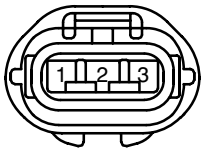

A19
(3RZ-FE, 1GR-FE) Green

A20
Black

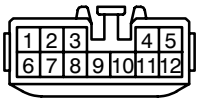

A21

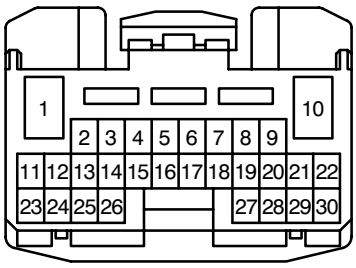

A22

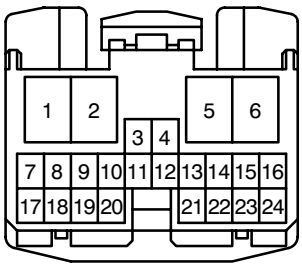

*5 : w/ Navigation System
*6 : w/o Navigation System
*7 : w/o Side Airbag

A23

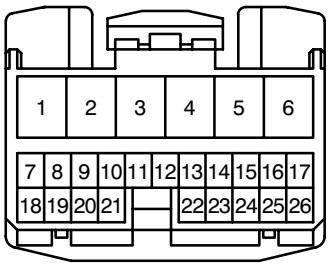

A24
Black

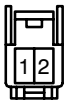

A25
Black

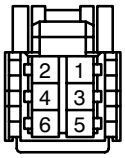

A26

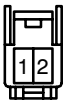

A27

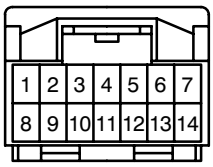

A28
Black

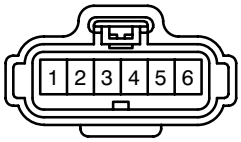

A29
Black

A30
(*5)

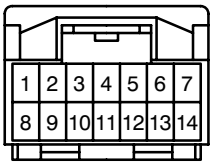

A30
(*6) Gray

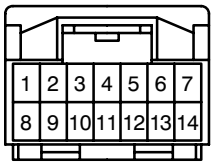

A31
Black

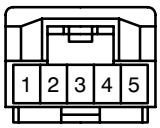

A32
Black

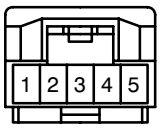

A33
Black

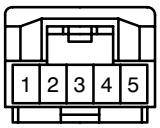

A34
Black

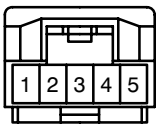

A35
(w/ Side Airbag) Yellow

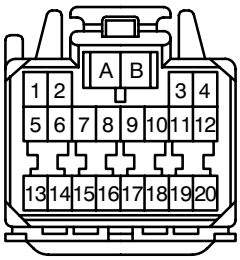

A35
(*7) Yellow

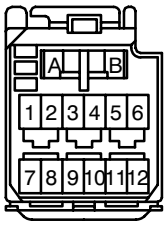

A36
Yellow

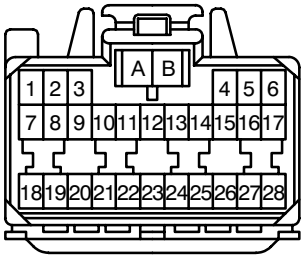

A37
(w/ Side Airbag) Yellow

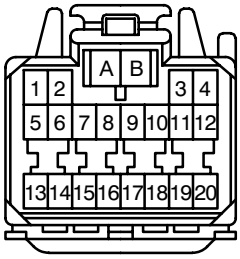

A37
(*7) Yellow

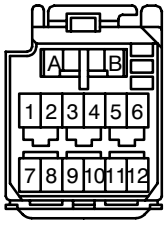

A38
Yellow

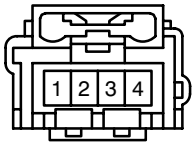

A39
Yellow

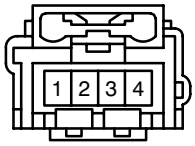

A40

A41

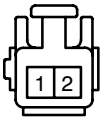

A42
(3–Door) Gray

A42
(5–Door)

K CONNECTOR LIST

A43
Black

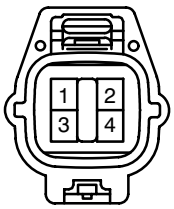

A44
Black

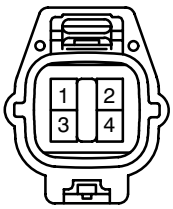

A45
Black

A46
Dark Gray

A47
Dark Gray

B 1
Gray

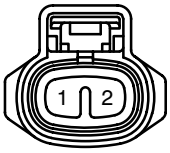

B 2
(w/ VSC) Gray

B 2
(w/o VSC) Gray

B 3
Gray

B 4
Black

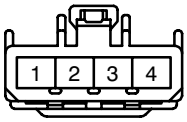

B 5
Black

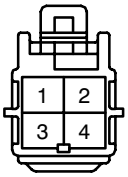

B 6
Black

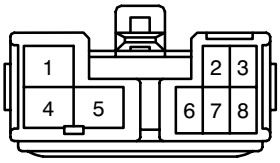

B 7

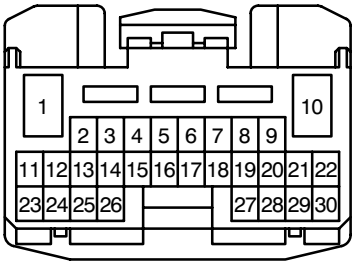

B 8

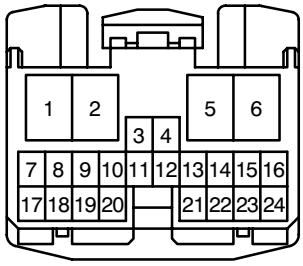

B 9

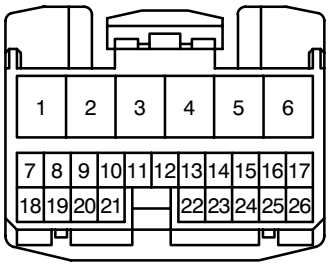

B10

B11

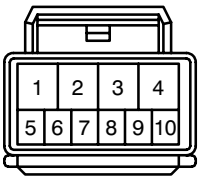

B12

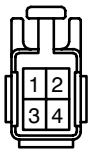

B13

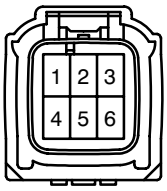

B14

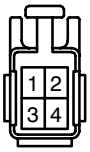

B15

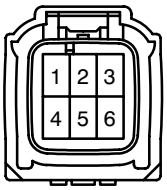

C 1
Black

C 2
Black

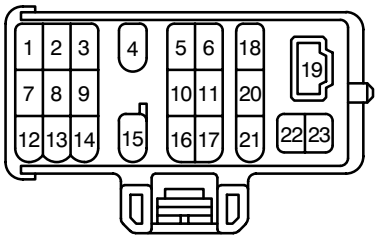

*8 : LH Turn Lever Type
*9 : RH Turn Lever Type

C 3
(1GR–FE) Black

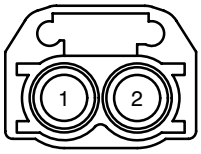

C 3
(1KD–FTV) Gray

C 3
(1KZ–TE, 5L–E) Black

C 3
(3RZ–FE) Dark Gray

C 4

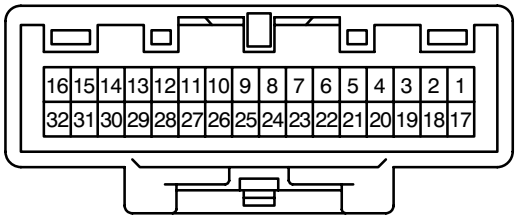

C 5
Gray

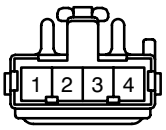

C 6

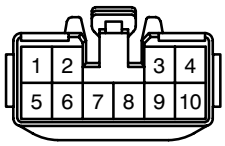

C 7

C 8
Gray

C 9

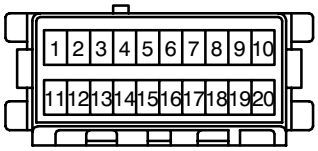

C10

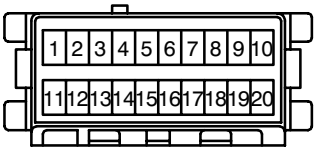

C11

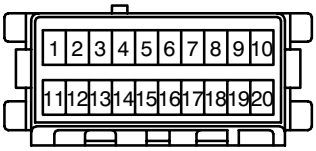

C12

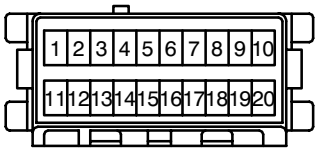

C13
Black

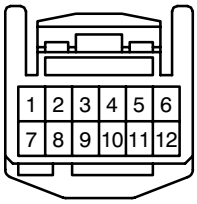

C14
(*8)

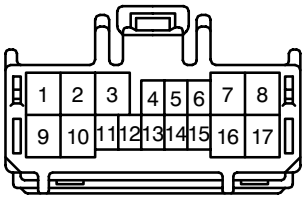

C14
(*9)

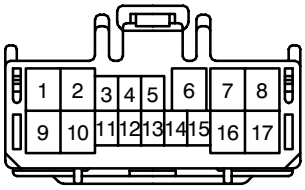

C15
Black

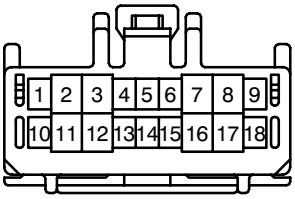

C16
Black

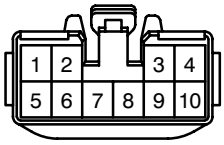

C17
Black

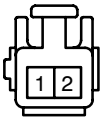

C18

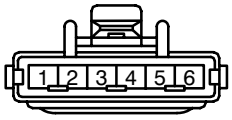

C19

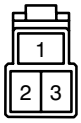

C20

C21
Black

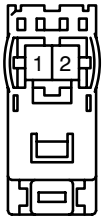

C22
Black

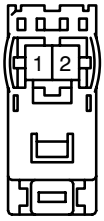

C23
Black

K CONNECTOR LIST

*10 : LHD 3−Door w/o Jam Protection
*11 : w/ Jam Protection
*12 : w/o Jam Protection Except LHD 3−Door
*13 : 1KD−FTV, 1KZ−TE, 1GR−FE

C24
Black

D 1
Blue

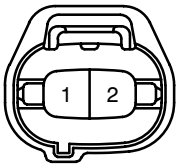

D 2
Blue

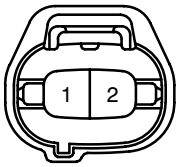

D 3
Gray

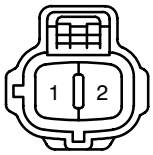

D 4
Black

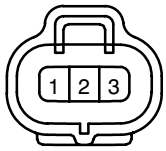

D 5
Black

D 6

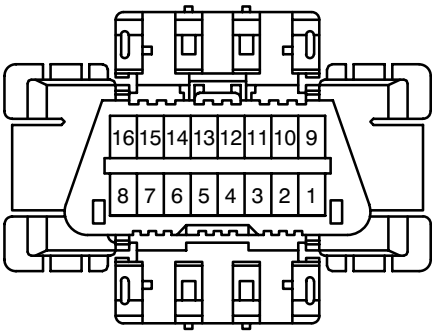

D 7

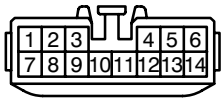

D 8
Blue

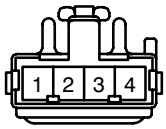

D 9
Gray

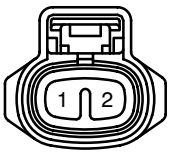

D10

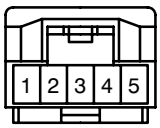

D11
Gray

D12
Gray

D13
Gray

D14
Gray

D15
Black

D16
Black

D17

D18

D19

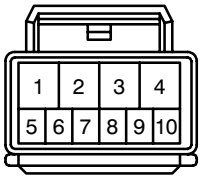

D20

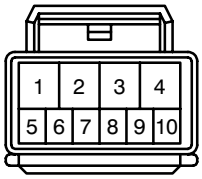

D21
(*10)

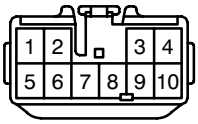

D21
(*11)

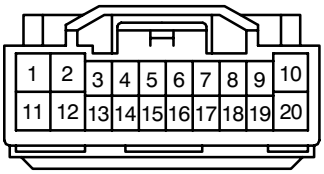

D21
(*12)

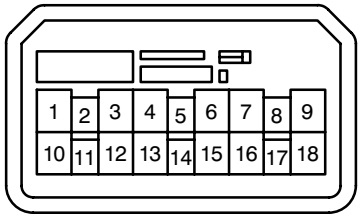

D22

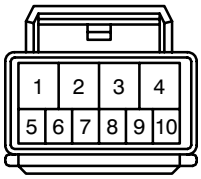

D23

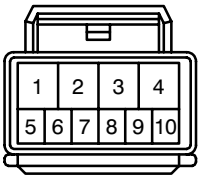

D24
Gray

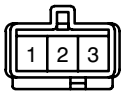

E 1
(*13) Gray

E 1
(3RZ−FE) Black

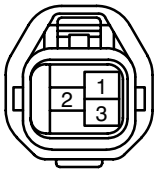

*3 : 3RZ–FE Unleaded Gasoline
*14 : 1KZ–TE, 3RZ–FE Unleaded Gasoline
*15 : 3RZ–FE Leaded Gasoline

E 2
Black

E 3
Black

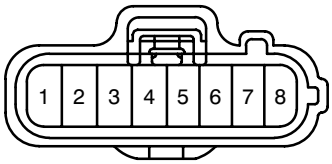

E 4
Dark Gray

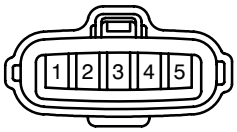

E 5
Black

E 6
Gray

E 7

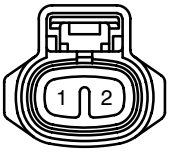

E 8
Gray

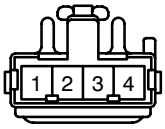

E 9
(1GR–FE)

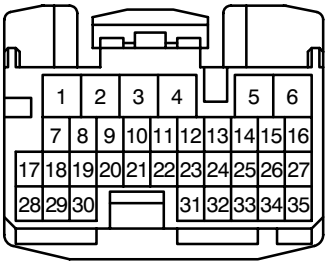

E 9
(1KD–FTV)

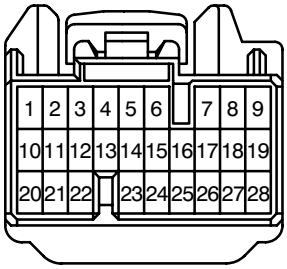

E 9
(*14)

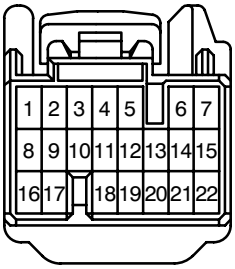

E 9
(5L–E)

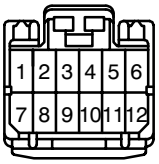

E10
(1GR–FE)

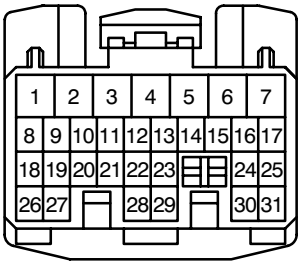

E10
(1KD–FTV)

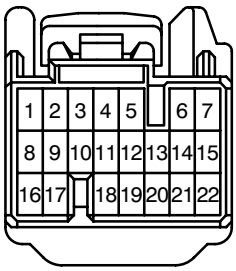

E10
(1KZ–TE)

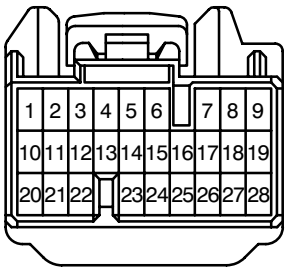

E10
(*15)

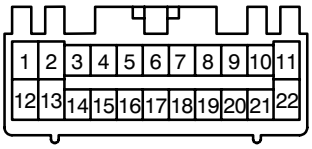

E10
(*3)

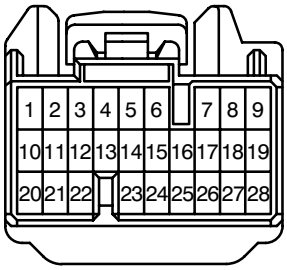

E10
(5L–E)

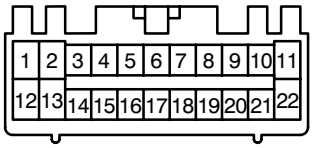

E11
(1GR–FE)

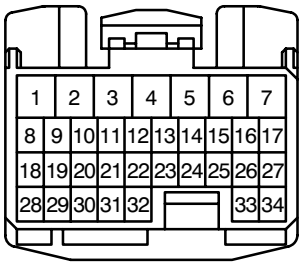

*3 : 3RZ–FE Unleaded Gasoline
*15 : 3RZ–FE Leaded Gasoline

E11
(1KD–FTV)

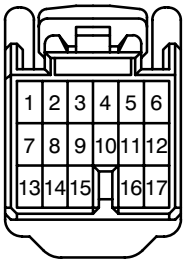

E11
(1KZ–TE)

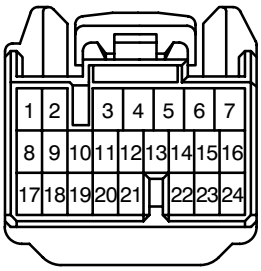

E11
(*15)

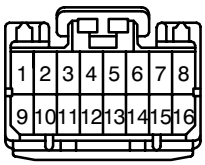

E11
(*3)

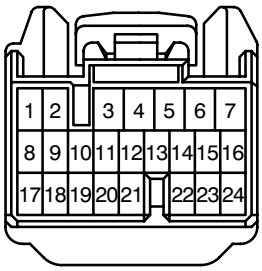

E11
(5L–E)

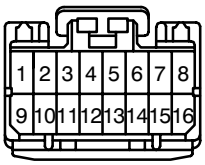

E12
(1GR–FE)

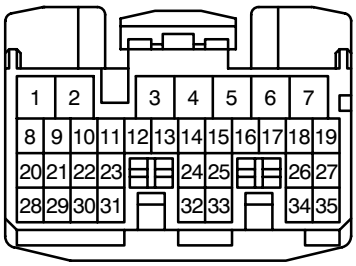

E12
(1KD–FTV)

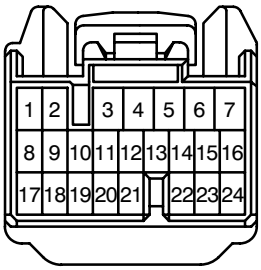

E12
(1KZ–TE)

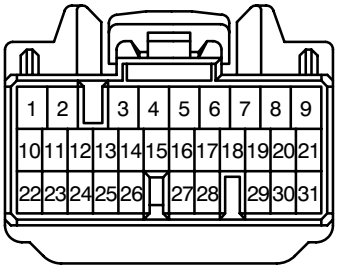

E12
(*15)

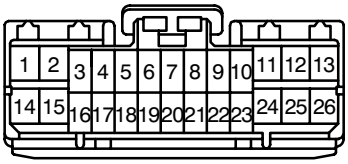

E12
(*3)

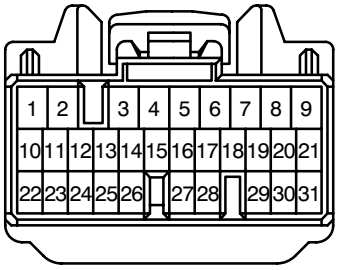

E12
(5L–E)

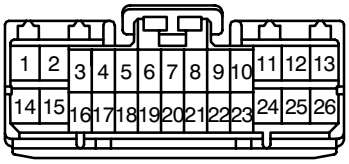

E13
(1GR–FE)

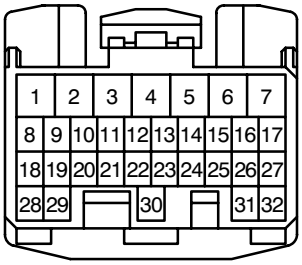

E13
(1KD–FTV)

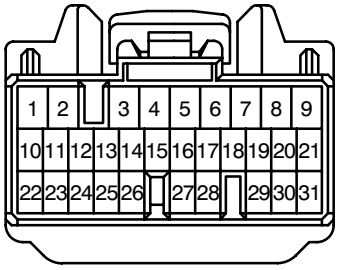

F 1

F 2

F 3
Brown

F 4
Brown

F 5
Gray

F 6
Gray

*1 : 1KD–FTV, 1KZ–TE

F 7
Black

F 8
Gray

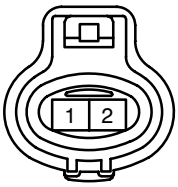

F 9
Black

F10
Black

F11
Dark Gray

F12
Black

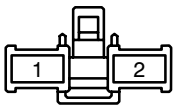

F13
Black

F14

F15

F16
Black

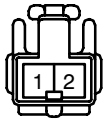

F17
Black

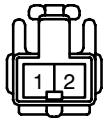

F18

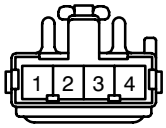

F19

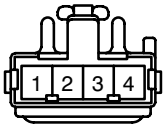

F20
Dark Gray

F21

F22
Black

F23
Dark Gray

F24
Black

F25
Dark Gray

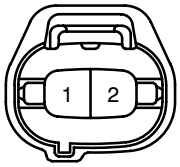

G 1
(*1)

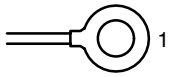

G 1
(5L–E)

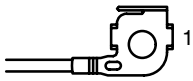

G 2
Gray

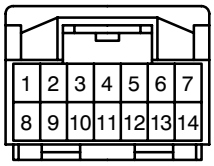

G 3
Black

G 4
Black

H 1
Black

H 2
Black

H 3
Black

H 4
Black

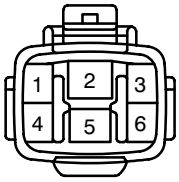

H 5

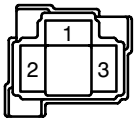

H 6

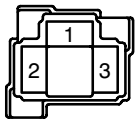

H 7
Dark Gray

H 8
Black

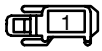

*5 : w/ Navigation System
*6 : w/o Navigation System
*15 : 3RZ-FE Leaded Gasoline
*16 : 3RZ-FE Unleaded Gasoline, 1GR-FE

H 9
Black

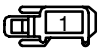

H10
Black

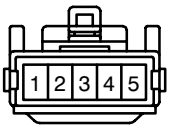

H11
Gray

H12
(*5) Gray

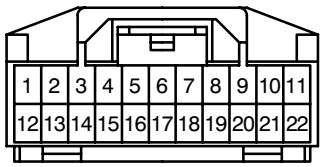

H12
(*6)

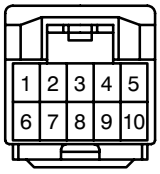

H13

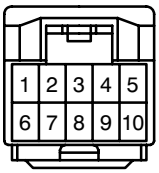

H14
Gray

H15
Black

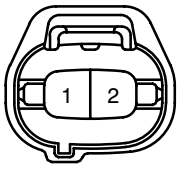

H17
Black

H18
Black

H19

H20
Dark Gray

H21
Dark Gray

I 1
(*15) Gray

I 1
(*16) Black

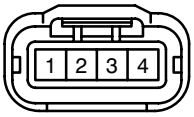

I 2
(*15) Black

I 2
(*16) Black

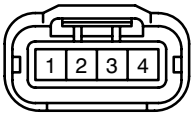

I 3
Black

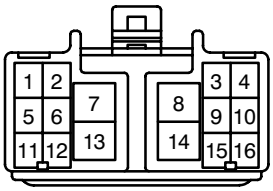

I 4
Black

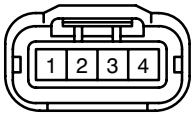

I 5
Black

I 6
(1GR-FE) Gray

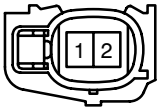

I 6
(1KD-FTV)

I 6
(3RZ-FE) Brown

I 7
(1GR-FE) Gray

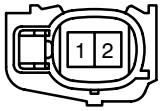

I 7
(1KD-FTV)

I 7
(3RZ-FE) Gray

I 8
(1GR-FE) Gray

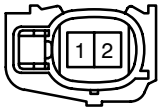

I 8
(1KD-FTV)

I 8
(3RZ-FE) Brown

I 9
(1GR-FE) Gray

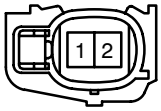

I 9
(1KD-FTV)

*1 : 1KD–FTV, 1KZ–TE
*3 : 3RZ–FE Unleaded Gasoline
*17 : 3RZ–FE Leaded Gasoline, 1GR–FE

I 9
(3RZ–FE) Gray

I10
(*1) Dark Gray

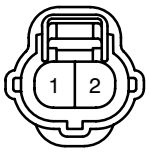

I10
(3RZ–FE, 5L–E) Dark Gray

I11
Black

I12
Black

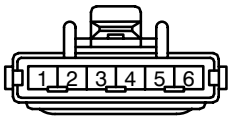

I13
Black

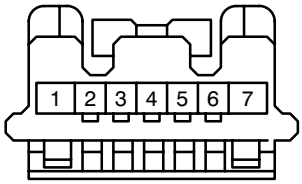

I14

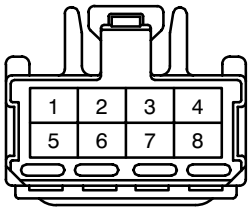

I15

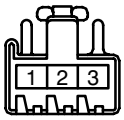

I16
Black

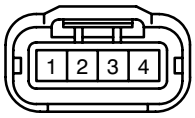

I17
Black

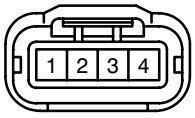

I18
Gray

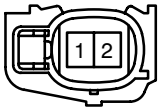

I19
Gray

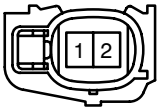

J 1

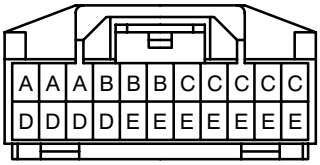

J 2

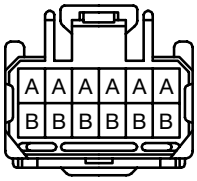

J 3

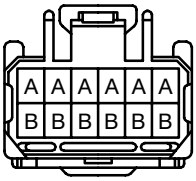

J 4
Dark Gray

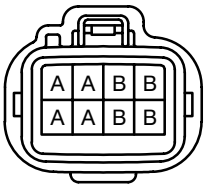

J 5
Dark Gray

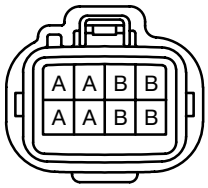

J 6
Dark Gray

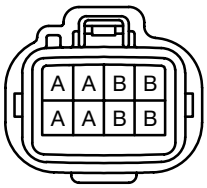

J 7

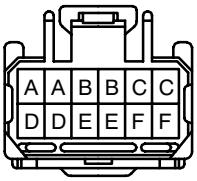

J 8

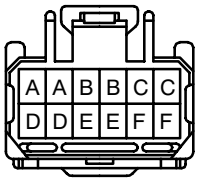

J 9
(LHD) Black

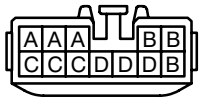

J 9
(RHD)

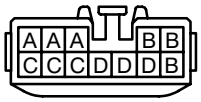

J10
(*1)

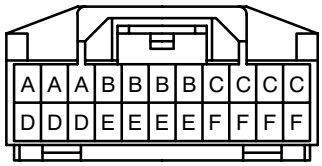

J10
(*17)

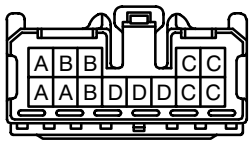

J10
(*3)

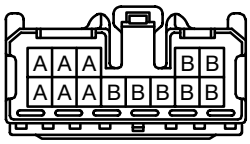

*17 : 3RZ-FE Leaded Gasoline, 1GR-FE
*18 : 3RZ-FE Unleaded Gasoline, 5L-E

J10
(5L-E)

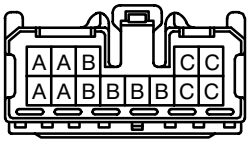

J11
(1KD-FTV)

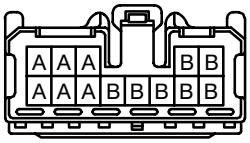

J11
(1KZ-TE)

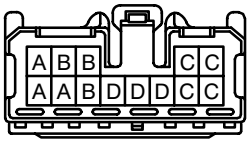

J11
(*17)

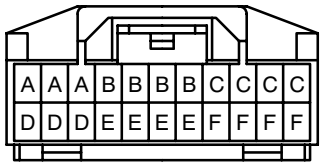

J11
(*18)

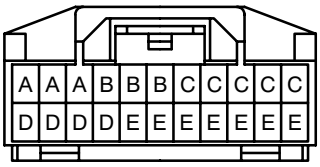

J12

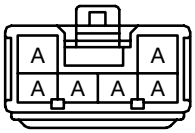

J13
Blue

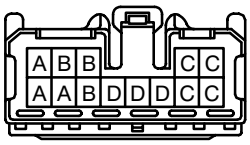

J14

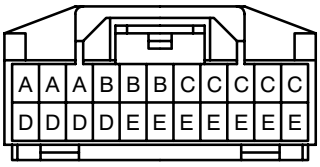

J15

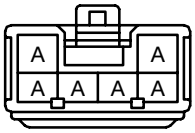

J16
Blue

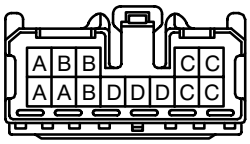

J17

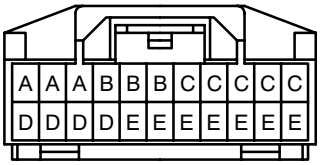

J18
Gray

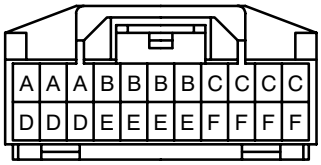

J19
Gray

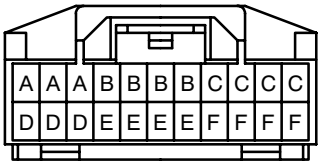

J20
Gray

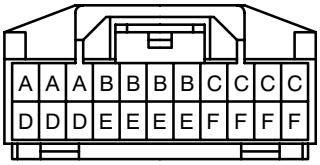

J21
Gray

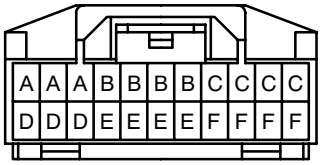

J22
Blue

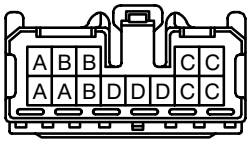

J23
(LHD)

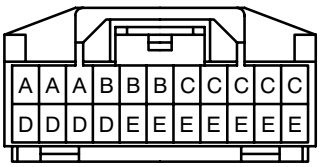

J23
(RHD) Blue

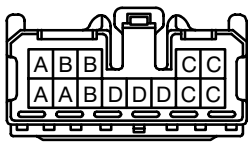

J24

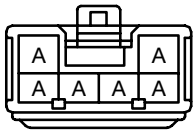

J25

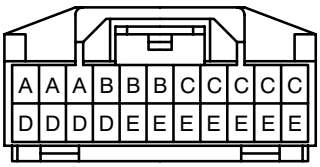

J26

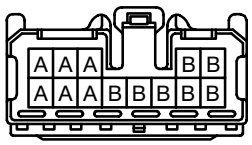

J27

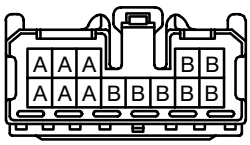

J28

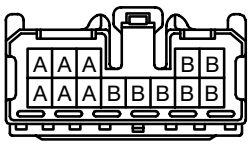

J29

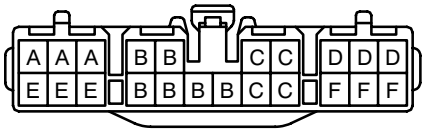

J30

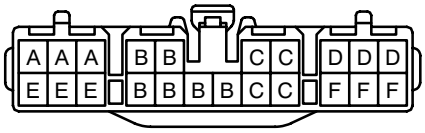

J31

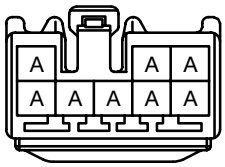

J33

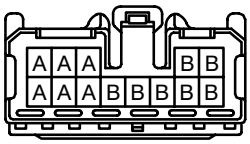

J34

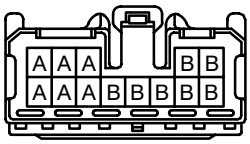

J35
Black

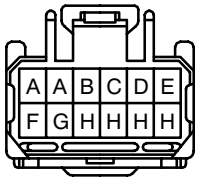

J36

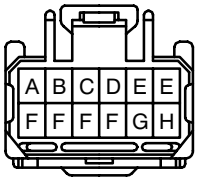

J37
Black

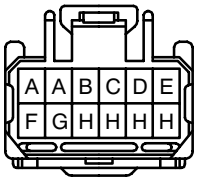

J38

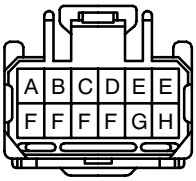

K 1
Dark Gray

K 2

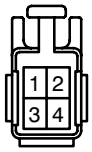

K 3
Black

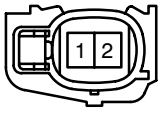

K 4
Black

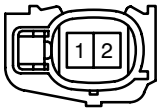

L 1
Gray

L 2

L 3

L 4

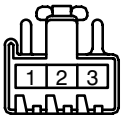

L 5
Black

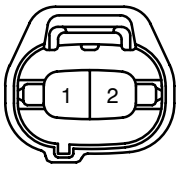

M 1
Gray

M 2
Gray

M 3
Blue

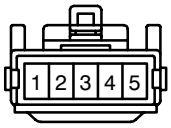

M 4

M 5

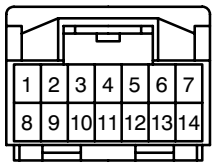

M 6

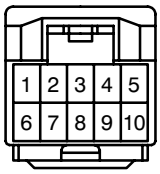

M 7

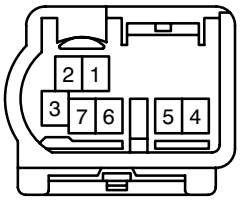

M 8

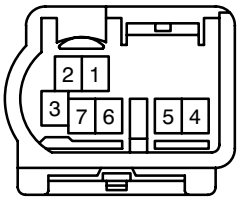

M 9

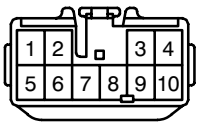

K CONNECTOR LIST

*11 : w/ Jam Protection
*19 : w/o Jam Protection

N 1
Gray

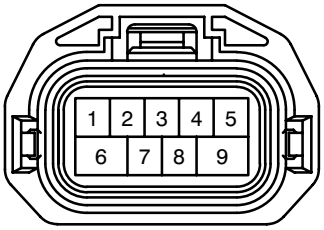

N 2
Gray

N 3

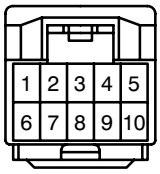

N 4

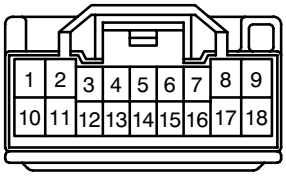

N 5
Gray

O 1
(Except 5L−E) Gray

O 1
(5L−E)

O 2
Gray

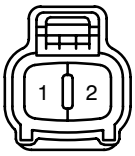

O 3

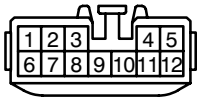

O 4

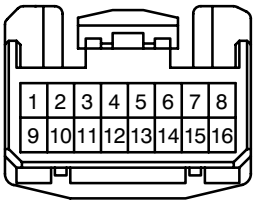

P 1
Black

P 2
Gray

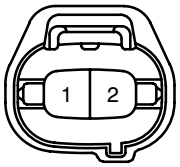

P 3
Dark Gray

P 4
Black

P 5

P 6

P 7

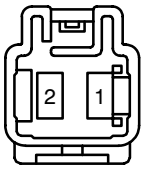

P 8

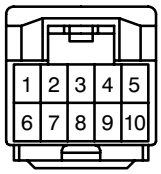

P 9

P10
(*11)

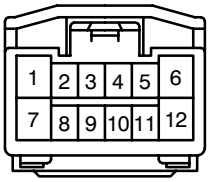

P10
(*19)

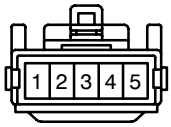

P11
(*11)

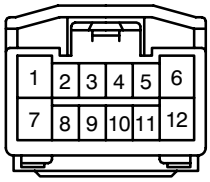

P11
(*19)

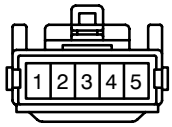

P12
(*11)

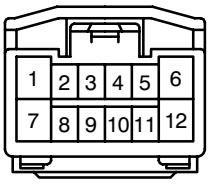

P12
(*19)

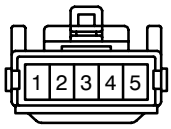

P13
(*11)

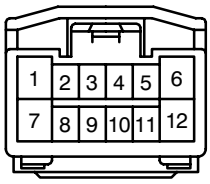

P13
(*19)

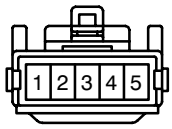

P14
Black

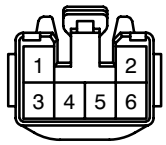

P15
Black

P16
Black

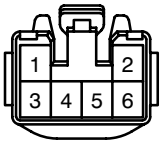

P17
Black

P18
Yellow

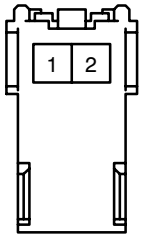

P19
Yellow

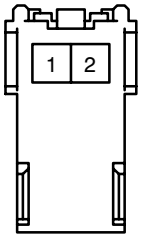

P20

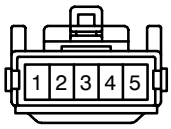

P21
Black

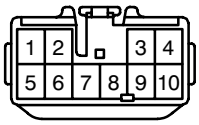

P22
Black

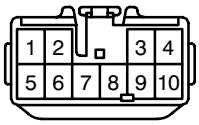

P23
Black

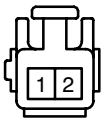

P24
Black

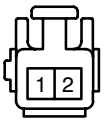

P25
Black

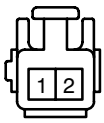

P26
Black

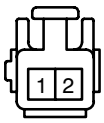

P27
Black

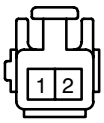

P28
Black

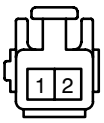

P29
Black

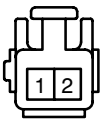

R 1

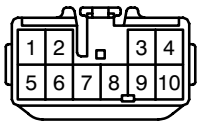

R 2

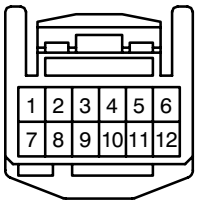

R 3

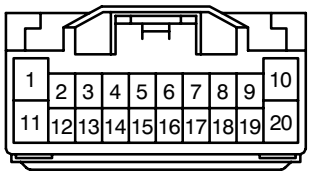

R 4

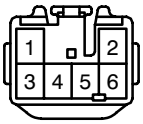

R 5

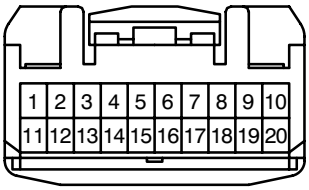

R 6

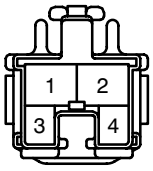

R 7
(Automatic A/C)

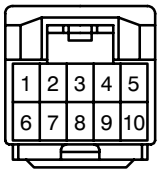

R 7
(Manual A/C)

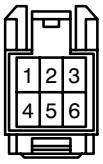

R 8
Blue

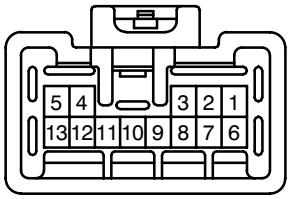

R 9

R10
Black

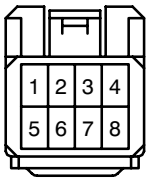

R11

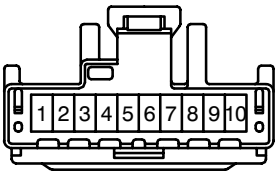

R12
(Analog Meter)

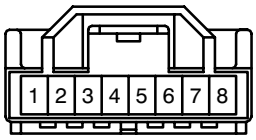

R12
(Optitron Meter) Blue

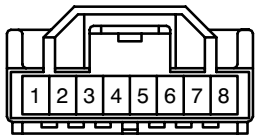

K CONNECTOR LIST

*20 : Spare Tire–Back Door Mounted
*21 : Spare Tire–Under Floor Mounted

R13

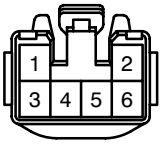

R14

R15

R16

R17
Black

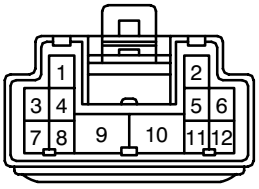

R18
Black

R19
Black

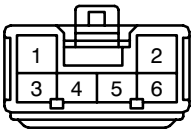

R20
Black

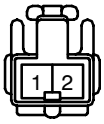

R21
Black

R22

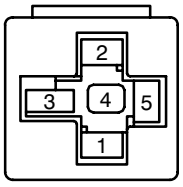

R23

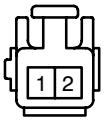

R24
Gray

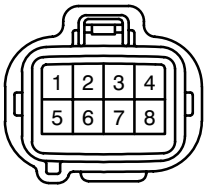

R25

R26

R27
Gray

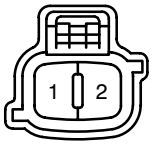

R28
Gray

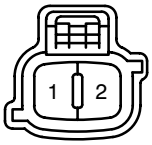

R29
Black

R30

R31

R32
Black

R33
(*20) Black

R33
(*21)

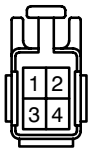

S 1
Black

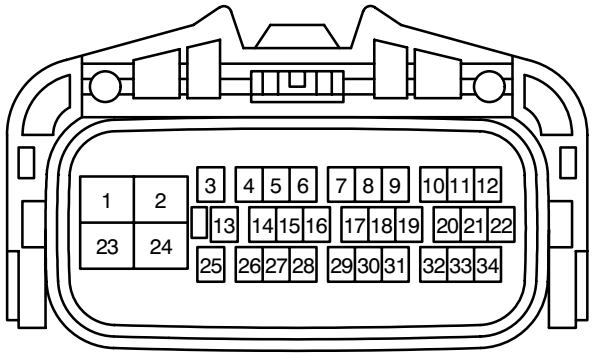

S 2
Black

S 3
Black

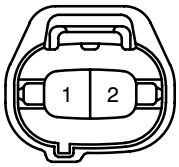

S 4
(Diesel)

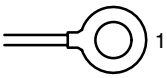

S 4
(3RZ–FE, 1GR–FE)

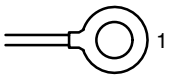

S 5
(1KD–FTV, 5L–E) Black

S 5
(1KZ–TE)

S 5
(3RZ–FE, 1GR–FE) Black

S 6
Brown

S 7
Black

S 8
Black

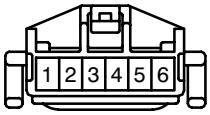

S 9

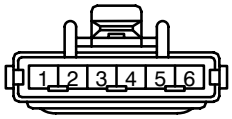

S10

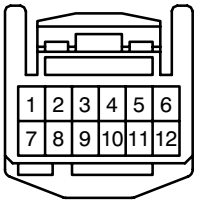

S11

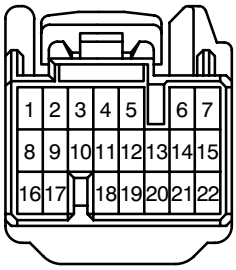

S12
Black

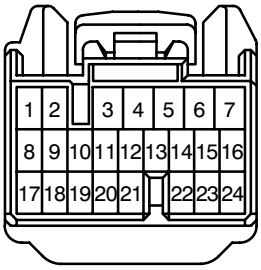

S13

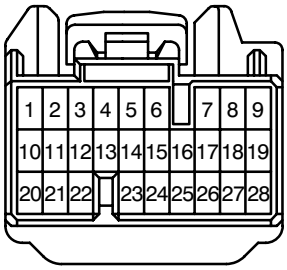

S14

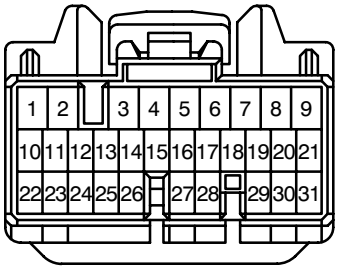

S15

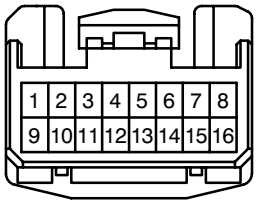

S16

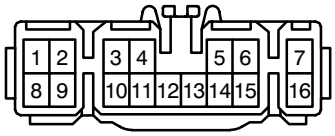

S17

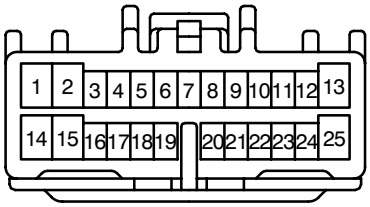

S18
Blue

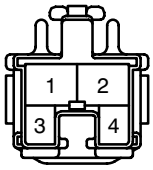

S19

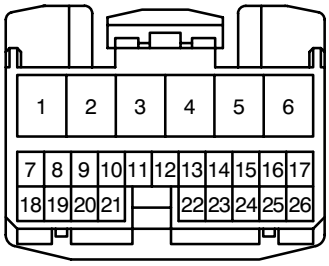

S20

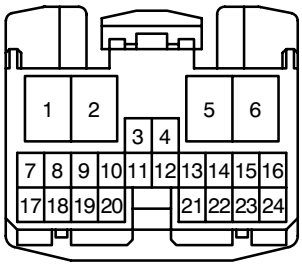

S21

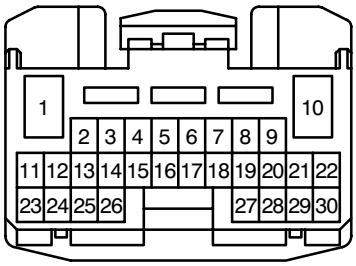

S22
Yellow

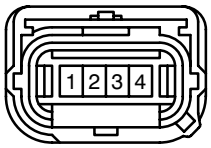

*3 : 3RZ-FE Unleaded Gasoline
*22 : Except 3RZ-FE Unleaded Gasoline

S23
Yellow

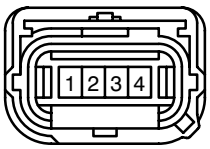

S24
Yellow

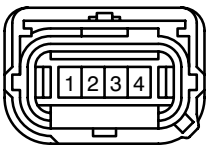

S25
Yellow

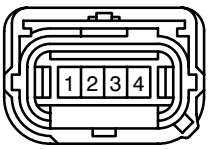

S26

S27

S28
Yellow

S29
Yellow

T 1
Black

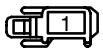

T 2
Black

T 3
(1KD-FTV) Gray

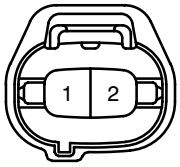

T 3
(1KZ-TE) Black

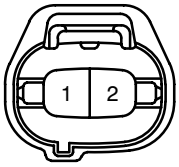

T 4
Black

T 5
(1KZ-TE) Brown

T 5
(5L-E) Gray

T 6
Black

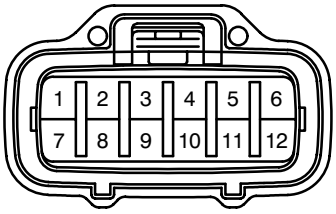

T 7
Black

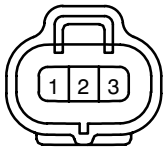

T 8

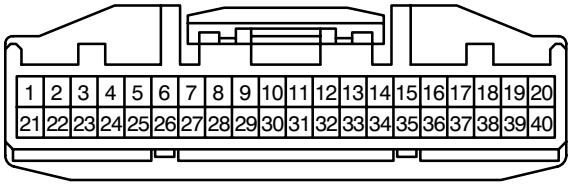

T 9
(*22)

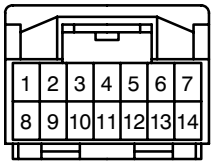

T 9
(*3)

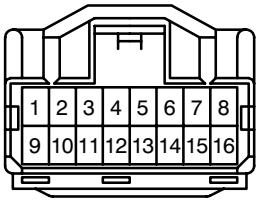

T10
Black

T11
(LHD) Black

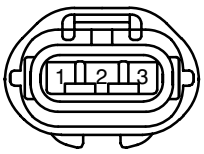

T11
(RHD) Gray

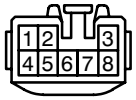

T12

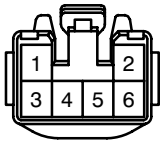

T13
Gray

T14
Black

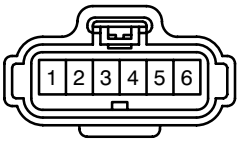

T15
Black

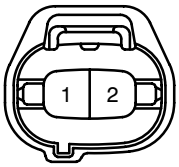

V 1
Black

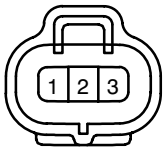

V 2
Black

V 3
Gray

V 5
(1KD-FTV) Brown

V 5
(1KZ-TE) Black

V 6
Black

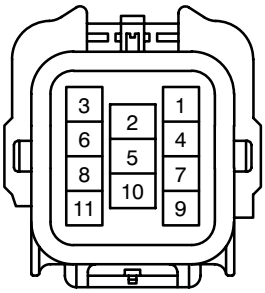

V 7
Black

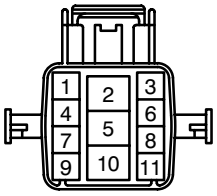

V 8
(1KD-FTV) Blue

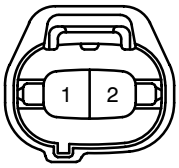

V 8
(1KZ-TE) Black

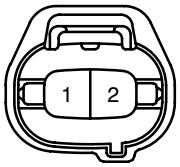

V 9
Brown

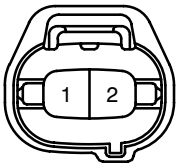

V10
(Except 1GR-FE) Black

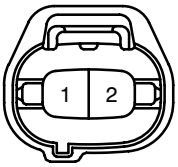

V10
(1GR-FE) Gray

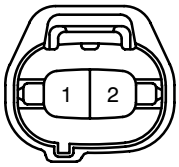

V11
Brown

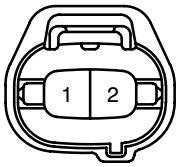

V12

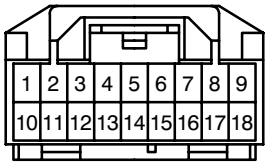

V13
Black

V14

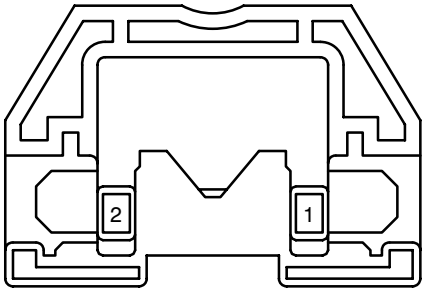

V15

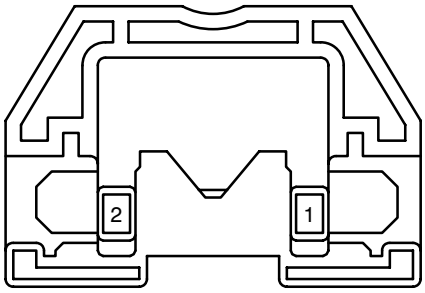

V16
Green

V17
Brown

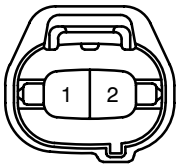

V18
Black

V19
Black

W 1
Dark Gray

W 2
Gray

W 3
(Except 1GR−FE) Dark Gray

W 3
(1GR−FE) Gray

W 4

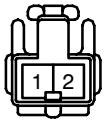

W 5

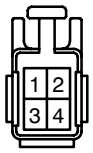

Y 1
Black

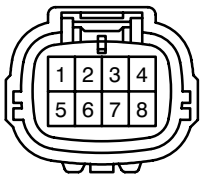

L PART NUMBER OF CONNECTORS

Code	Part Name	Part Number
A 1	A/C Ambient Temp. Sensor	90980–11070
A 2	A/C Condenser Fan Motor	90980–11237
A 3	A/C Lock Sensor	90980–11016
	A/C Magnetic Clutch	
A 4	A/C Magnetic Clutch	90980–11271
A 5	A/C Magnetic Valve	90980–11075
A 6	A/T Oil Temp. Sensor (1GR–FE)	90980–11025
	A/T Oil Temp. Sensor (1KD–FTV, 1KZ–TE)	
	A/T Oil Temp. Sensor (3RZ–FE)	90980–10706
A 7	ABS & BA & TRC & VSC Actuator	90980–11413
A 8	ABS & BA & TRC & VSC Actuator	90980–10895
A 9	ABS & BA & TRC & VSC Actuator	90980–11151
A10	ABS Speed Sensor Front LH	90980–11003
A11	ABS Speed Sensor Front RH	
A12	Absorber Control Actuator Front LH	90980–11929
A13	Absorber Control Actuator Front RH	
A14	Air Flow Meter (1KD–FTV, 1GR–FE)	90980–11317
	Air Flow Meter (3RZ–FE Unleaded Gasoline)	90980–12292
A15	Air Vent Control Servo Motor	90980–11144
A16	Airbag Sensor Front LH	90980–11856
A17	Airbag Sensor Front RH	
A18	Alternator (1GR–FE)	90980–09372
	Alternator (1KD–FTV)	90980–09213
	Alternator (3RZ–FE, 1KZ–TE, 5L–E)	90980–09212
A19	Alternator (1KD–FTV)	90980–11964
	Alternator (1KZ–TE, 5L–E)	90980–11349
	Alternator (3RZ–FE, 1GR–FE)	90980–11964
A20	A/C Amplifier	90980–10803
A21	A/C Control Assembly (w/o Navigation System)	90980–12151
	A/C ECU (w/ Navigation System)	
A22	A/C Control Assembly (w/o Navigation System)	90980–12149
	A/C ECU (w/ Navigation System)	
A23	A/C Control Assembly (w/o Navigation System)	90980–12150
	A/C ECU (w/ Navigation System)	
A24	A/C Room Temp. Sensor	90980–11918
A25	A/C Solar Sensor	90980–12056
A26	A/C Thermistor	90980–11918
A27	A/T Shift Indicator	90980–11911
A28	Accel Position Sensor	90980–11858
A29	Acceleration Control Sensor Front	90980–10845
A30	Accessory Meter	90980–11911
A31	Air Inlet Control Servo Motor	90980–11909
A32	Air Mix Control Servo Motor LH	
A33	Air Mix Control Servo Motor RH	

Code	Part Name	Part Number
A34	Air Vent Mode Control Servo Motor	90980–11909
A35	Airbag Sensor Assembly (w/ Side Airbag)	82824–50160
	Airbag Sensor Assembly (w/o Side Airbag)	90980–11869
A36	Airbag Sensor Assembly	90980–11872
A37	Airbag Sensor Assembly (w/ Side Airbag)	82824–50150
	Airbag Sensor Assembly (w/o Side Airbag)	90980–11867
A38	Airbag Squib (Front Passenger Airbag Assembly)	90980–12160
A39	Airbag Squib (Steering Wheel Pad)	
A40	Antenna Amplifier	90980–11146
A41	Ashtray Illumination	90980–10825
A42	ABS Speed Sensor Rear (3–Door)	90980–10941
	ABS Speed Sensor Rear (5–Door)	90980–10942
A43	Absorber Control Actuator Rear LH	90980–11930
A44	Absorber Control Actuator Rear RH	
A45	Acceleration Control Sensor Rear	90980–10845
A46	Air Fuel Ratio Sensor (Bank 1 Sensor 1)	90980–11178
A47	Air Fuel Ratio Sensor (Bank 2 Sensor 1)	
B 1	Back–Up Light SW	90980–11250
B 2	Brake Fluid Level Warning SW (w/ VSC)	90980–11009
	Brake Fluid Level Warning SW (w/o VSC)	90980–11207
B 3	Brake Vacuum Warning SW	90980–11252
B 4	Blower Motor Linear Controller	90980–11676
B 5	Blower Resistor	90980–11136
B 6	Blower SW	90980–10877
B 7	Body ECU	90980–12151
B 8	Body ECU	90980–12149
B 9	Body ECU	90980–12150
B10	Back Door Courtesy SW	90980–10871
B11	Back Door Key Lock and Unlock SW	90980–12226
	Back Door Lock Motor	
	Back Door Unlock Detection SW	
B12	Buckle SW LH	90980–10795
	Occupant Detection Sensor	
B13	Buckle SW LH	90980–12257
	Seat Position Sensor	
B14	Buckle SW RH	90980–10795
	Occupant Detection Sensor	
B15	Buckle SW RH	90980–12257
	Seat Position Sensor	
C 1	Camshaft Position Sensor	90980–10947
C 2	Check Connector	90980–11323
C 3	Crankshaft Position Sensor (1GR–FE)	90980–12028
	Crankshaft Position Sensor (1KD–FTV)	90980–11016
	Crankshaft Position Sensor (1KZ–TE, 5L–E)	90980–11162
	Crankshaft Position Sensor (3RZ–FE)	90980–11016

Note: Not all of the above part numbers of the connector are established for the supply.

Code	Part Name	Part Number
C 4	CD Automatic Changer	90980–12262
C 5	Center Diff. Lock Control SW	90980–11013
C 6	Center Diff. Lock ECU	90980–10801
C 7	Cigarette Lighter	90980–10760
C 8	Cigarette Lighter Illumination	90980–11148
C 9	Combination Meter	82824–35040
C10	Combination Meter	82824–35030
C11	Combination Meter	82824–35040
C12	Combination Meter	82824–35030
C13	Combination SW	90980–12183
C14	Combination SW (LH Turn Lever Type)	90980–11672
	Combination SW (RH Turn Lever Type)	90980–11671
C15	Combination SW	90980–11594
C16	Cool Box Amplifier	90980–10801
C17	Cool Box Motor	90980–10825
C18	Cool Box SW	90980–10933
C19	Cool Box Thermistor	90980–10216
C20	Cruise Control Clutch SW	90980–10906
C21	Curtain Shield Airbag Squib LH	90980–12219
C22	Curtain Shield Airbag Squib RH	
C23	Camshaft Timing Oil Control Valve LH	90980–11162
C24	Camshaft Timing Oil Control Valve RH	
D 1	Detection SW (Transfer 4WD Position)	90980–11156
D 2	Detection SW (Transfer L4 Position)	
D 3	Detection SW (Transfer Neutral Position)	90980–10923
D 4	Deceleration Sensor	90980–10845
D 5	Diode (Front Fog Light)	90980–10962
D 6	DLC3	90980–11978
D 7	Double Door Lock Control Relay	90980–10807
D 8	Downhill Assist Control SW	90980–11013
D 9	Detection SW (Rear Diff. Lock)	90980–11250
D10	Door Control Receiver	90980–11909
D11	Door Courtesy Light Front LH	90980–11148
D12	Door Courtesy Light Front RH	
D13	Door Courtesy Light Rear LH	
D14	Door Courtesy Light Rear RH	
D15	Door Courtesy SW Front LH	90980–10871
D16	Door Courtesy SW Front RH	
D17	Door Courtesy SW Rear LH	
D18	Door Courtesy SW Rear RH	
D19	Door Key Lock and Unlock SW Front LH	90980–12226
	Door Lock Motor Front LH	
	Door Unlock Detection SW Front LH	
	Double Door Lock Motor Front LH	
	Position SW Front LH	

Code	Part Name	Part Number
D20	Door Key Lock and Unlock SW Front RH	90980–12226
	Door Lock Motor Front RH	
	Door Unlock Detection SW Front RH	
	Double Door Lock Motor Front RH	
	Position SW Front RH	
D21	Door Lock Control SW (LHD 3–Door w/o Jam Protection)	90980–10997
	Door Lock Control SW (w/ Jam Protection)	90980–12166
	Door Lock Control SW (w/o Jam Protection Except LHD 3–Door)	90980–12122
	Power Window Master SW (LHD 3–Door w/o Jam Protection)	90980–10997
	Power Window Master SW (w/ Jam Protection)	90980–12166
	Power Window Master SW (w/o Jam Protection Except LHD 3–Door)	90980–12122
D22	Door Lock Motor Rear LH	90980–12226
	Door Unlock Detection SW Rear LH	
	Double Door Lock Motor Rear LH	
	Position SW Rear LH	
D23	Door Lock Motor Rear RH	
	Door Unlock Detection SW Rear RH	
	Double Door Lock Motor Rear RH	
	Position SW Rear RH	
D24	Diode (Back–Up Light)	90980–11071
E 1	ECT Solenoid (1KD–FTV, 1KZ–TE, 1GR–FE)	90980–10891
	ECT Solenoid (3RZ–FE)	90980–10919
E 2	EGR Valve Position Sensor	90980–11143
E 3	Electronic Driver Unit	90980–11592
E 4	Electronic Driver Unit	90980–11024
E 5	Engine Hood Courtesy SW	90980–10942
E 6	Engine Oil Level Sensor	90980–11235
E 7	Engine Speed Sensor	90980–11250
E 8	ECT Pattern Select SW	90980–11013
E 9	Engine and ECT ECU (A/T) (1GR–FE)	90980–12146
	Engine and ECT ECU (A/T) (1KD–FTV)	90980–11637
	Engine and ECT ECU (A/T) (1KZ–TE, 3RZ–FE Unleaded Gasoline)	90980–11638
	Engine and ECT ECU (A/T) (5L–E)	90980–11408
	Engine ECU (M/T) (1GR–FE)	90980–12146
	Engine ECU (M/T) (1KD–FTV)	90980–11637
	Engine ECU (M/T) (1KZ–TE, 3RZ–FE Unleaded Gasoline)	90980–11638
	Engine ECU (M/T) (5L–E)	90980–11408

L PART NUMBER OF CONNECTORS

Code	Part Name	Part Number
E10	Engine and ECT ECU (A/T) (1GR–FE)	90980–12142
	Engine and ECT ECU (A/T) (1KD–FTV)	90980–11638
	Engine and ECT ECU (A/T) (1KZ–TE)	90980–11637
	Engine and ECT ECU (A/T) (3RZ–FE Leaded Gasoline)	90980–10765
	Engine and ECT ECU (A/T) (3RZ–FE Unleaded Gasoline)	90980–11637
	Engine and ECT ECU (A/T) (5L–E)	90980–10765
	Engine ECU (M/T) (1GR–FE)	90980–12142
	Engine ECU (M/T) (1KD–FTV)	90980–11638
	Engine ECU (M/T) (1KZ–TE)	90980–11637
	Engine ECU (M/T) (3RZ–FE Leaded Gasoline)	90980–10765
	Engine ECU (M/T) (3RZ–FE Unleaded Gasoline)	90980–11637
	Engine ECU (M/T) (5L–E)	90980–10765
E11	Engine and ECT ECU (A/T) (1GR–FE)	90980–12144
	Engine and ECT ECU (A/T) (1KD–FTV)	90980–11586
	Engine and ECT ECU (A/T) (1KZ–TE)	90980–11476
	Engine and ECT ECU (A/T) (3RZ–FE Leaded Gasoline)	90980–11391
	Engine and ECT ECU (A/T) (3RZ–FE Unleaded Gasoline)	90980–11476
	Engine and ECT ECU (A/T) (5L–E)	90980–11391
	Engine ECU (M/T) (1GR–FE)	90980–12144
	Engine ECU (M/T) (1KD–FTV)	90980–11586
	Engine ECU (M/T) (1KZ–TE)	90980–11476
	Engine ECU (M/T) (3RZ–FE Leaded Gasoline)	90980–11391
	Engine ECU (M/T) (3RZ–FE Unleaded Gasoline)	90980–11476
	Engine ECU (M/T) (5L–E)	90980–11391
E12	Engine and ECT ECU (A/T) (1GR–FE)	90980–12145
	Engine and ECT ECU (A/T) (1KD–FTV)	90980–11476
	Engine and ECT ECU (A/T) (1KZ–TE)	90980–11421
	Engine and ECT ECU (A/T) (3RZ–FE Leaded Gasoline)	90980–11390
	Engine and ECT ECU (A/T) (3RZ–FE Unleaded Gasoline)	90980–11421
	Engine and ECT ECU (A/T) (5L–E)	90980–11390
	Engine ECU (M/T) (1GR–FE)	90980–12145
	Engine ECU (M/T) (1KD–FTV)	90980–11476
	Engine ECU (M/T) (1KZ–TE)	90980–11421
	Engine ECU (M/T) (3RZ–FE Leaded Gasoline)	90980–11390
	Engine ECU (M/T) (3RZ–FE Unleaded Gasoline)	90980–11421
	Engine ECU (M/T) (5L–E)	90980–11390

Code	Part Name	Part Number
E13	Engine and ECT ECU (A/T) (1GR–FE)	90980–12143
	Engine and ECT ECU (A/T) (1KD–FTV)	90980–11421
	Engine ECU (M/T) (1GR–FE)	90980–12143
	Engine ECU (M/T) (1KD–FTV)	90980–11421
F 1	Front Clearance Light LH	90980–10942
	Front Turn Signal Light LH	
F 2	Front Clearance Light RH	
	Front Turn Signal Light RH	
F 3	Front Fog Light LH	90980–11096
F 4	Front Fog Light RH	
F 5	Front Side Turn Signal Light LH	90980–11162
F 6	Front Side Turn Signal Light RH	
F 7	Front Wiper Motor	90980–11599
F 8	Fuel Heater	90980–10928
F 9	Fuel Pressure Sensor	90980–10845
F10	Fuel Sedimentary SW	90980–11003
F11	Fuel Temp. Sensor	90980–10737
F12	Front Blower Motor	90980–10385
F13	Front Passenger's Seat Belt Warning Light	90980–11296
F14	Front Door Speaker LH	90980–10935
F15	Front Door Speaker RH	
F16	Front Door Squawker LH	90980–10860
F17	Front Door Squawker RH	
F18	Front Door Tweeter Speaker LH	90980–11013
F19	Front Door Tweeter Speaker RH	
F20	Fuel Pump	90980–11038
F21	Fuel Pump and Sender (Gasoline)	90980–11077
	Fuel Sender (Diesel)	
F22	Fuel Sender	82890–32030
F23	Fuel Sender (Sub)	90980–11038
F24	Fuel Sender (Sub)	82890–32030
F25	Fuel Pump Resistor	90980–11156
G 1	Glow Plug (1KD–FTV, 1KZ–TE)	99141–13004
	Glow Plug (5L–E)	90980–09318
G 2	Gateway ECU	90980–11911
G 3	Glove Box Light	90980–11148
G 4	Glove Box Light SW	90980–11098
H 1	Headlight Beam Level Control Actuator LH	90980–11016
H 2	Headlight Beam Level Control Actuator RH	
H 3	Headlight Cleaner Motor	90980–11410
H 4	Headlight Cleaner Relay	90980–10939
H 5	Headlight LH	90980–11314
H 6	Headlight RH	

Note: Not all of the above part numbers of the connector are established for the supply.

Code	Part Name	Part Number
H 7	Heated Oxygen Sensor	90980–11028
H 8	Horn (High)	90980–10619
H 9	Horn (Low)	
H10	Hazard SW	90980–10789
H11	Headlight Beam Level Control SW	90980–10996
H12	Heater Control SW (w/ Navigation System)	90980–11915
	Heater Control SW (w/o Navigation System)	90980–11923
H13	Height Control and Suspension SW	90980–11923
H14	Height Control Compressor	90980–10990
H15	Height Control Exhaust Valve	90980–11156
H17	Height Control Sensor Rear LH	90980–11016
H18	Height Control Sensor Rear RH	
H19	High Mounted Stop Light	90980–11003
H20	Heated Oxygen Sensor (Bank 1 Sensor 2)	90980–11028
H21	Heated Oxygen Sensor (Bank 2 Sensor 2)	
I 1	Ignition Coil and Igniter No.1 (3RZ–FE Leaded Gasoline)	90980–11150
	Ignition Coil and Igniter No.1 (3RZ–FE Unleaded Gasoline, 1GR–FE)	90980–11885
I 2	Ignition Coil and Igniter No.2 (3RZ–FE Leaded Gasoline)	90980–11150
	Ignition Coil and Igniter No.2 (3RZ–FE Unleaded Gasoline, 1GR–FE)	90980–11885
I 3	Ignition Coil and Igniter No.3	90980–10885
I 4	Ignition Coil and Igniter No.4	90980–11885
I 5	Injection Pump	90980–11028
I 6	Injector No.1 (1GR–FE)	90980–11875
	Injector No.1 (1KD–FTV)	90980–12005
	Injector No.1 (3RZ–FE)	90980–11153
I 7	Injector No.2 (1GR–FE)	90980–11875
	Injector No.2 (1KD–FTV)	90980–12005
	Injector No.2 (3RZ–FE)	90980–11153
I 8	Injector No.3 (1GR–FE)	90980–11875
	Injector No.3 (1KD–FTV)	90980–12005
	Injector No.3 (3RZ–FE)	90980–11153
I 9	Injector No.4 (1GR–FE)	90980–11875
	Injector No.4 (1KD–FTV)	90980–12005
	Injector No.4 (3RZ–FE)	90980–11153
I10	Intake Air Temp. Sensor (1KD–FTV, 1KZ–TE)	90980–11025
	Intake Air Temp. Sensor (3RZ–FE, 5L–E)	90980–11163
I11	ISC Valve	90980–11145
I12	Idle–Up SW	90980–10933
I13	Ignition Key Cylinder Light	90980–12092
	Transponder Key Amplifier	
I14	Ignition SW	90980–11615
I15	Interior Light	90980–12321

Code	Part Name	Part Number
I16	Ignition Coil and Igniter No.5	90980–11885
I17	Ignition Coil and Igniter No.6	
I18	Injector No.5	90980–11875
I19	Injector No.6	
J 1	Junction Connector	90980–11915
J 2	Junction Connector	90980–11661
J 3	Junction Connector	
J 4	Junction Connector	90980–10891
J 5	Junction Connector	
J 6	Junction Connector	
J 7	Junction Connector	90980–11661
J 8	Junction Connector	
J 9	Junction Connector	90980–10803
J10	Junction Connector (1KD–FTV, 1KZ–TE)	90980–11915
	Junction Connector (3RZ–FE Leaded Gasoline, 1GR–FE)	90980–11542
	Junction Connector (3RZ–FE Unleaded Gasoline)	
	Junction Connector (5L–E)	
J11	Junction Connector (1KD–FTV)	90980–11542
	Junction Connector (1KZ–TE)	
	Junction Connector (3RZ–FE Leaded Gasoline, 1GR–FE)	90980–11915
	Junction Connector (3RZ–FE Unleaded Gasoline, 5L–E)	
J12	Junction Connector	90980–10976
J13	Junction Connector	90980–11542
J14	Junction Connector	90980–11915
J15	Junction Connector	90980–10976
J16	Junction Connector	90980–11542
J17	Junction Connector	90980–11915
J18	Junction Connector	
J19	Junction Connector	
J20	Junction Connector	
J21	Junction Connector	
J22	Junction Connector	90980–11542
J23	Junction Connector (LHD)	90980–11915
	Junction Connector (RHD)	90980–11542
J24	Junction Connector	90980–10976
J25	Junction Connector	90980–11915
J26	Junction Connector	90980–11542
J27	Junction Connector	
J28	Junction Connector	
J29	Junction Connector	90980–11238
J30	Junction Connector	
J31	Junction Connector	90980–11686

L PART NUMBER OF CONNECTORS

Code	Part Name	Part Number
J33	Junction Connector	90980–11542
J34	Junction Connector	
J35	Junction Connector	90980–11661
J36	Junction Connector	
J37	Junction Connector	
J38	Junction Connector	
K 1	Knock Sensor	90980–11166
K 2	Key Interlock Solenoid	90980–10795
	Unlock Warning SW	
K 3	Knock Sensor LH	90980–11875
K 4	Knock Sensor RH	
L 1	License Plate Light	90980–11002
L 2	License Plate Light LH	90980–11148
L 3	License Plate Light RH	
L 4	Luggage Compartment Light	90980–12321
L 5	Low Pressure Tank Valve	90980–11156
M 1	Magnetic Spill Valve	90980–11284
M 2	Master Cylinder Pressure Sensor	90980–11451
M 3	Mirror Heater SW	90980–10789
M 4	Multi–Display	90980–10799
M 5	Multi–Display	90980–11911
M 6	Multi–Display	90980–11923
M 7	Mirror Heater LH	90980–12059
	Remote Control Mirror LH	
M 8	Mirror Heater RH	
	Remote Control Mirror RH	
M 9	Moon Roof Control ECU and Motor	90980–10997
N 1	Neutral Start SW	90980–11784
N 2	Noise Filter	90980–10843
N 3	Navigation ECU	90980–11923
N 4	Navigation ECU	90980–11973
N 5	Noise Filter (Condenser Fan)	90980–10843
O 1	Oil Pressure SW (Except 5L–E)	90980–11363
	Oil Pressure SW (5L–E)	90980–10703
O 2	Option Connector (Keyless Buzzer)	90980–11051
O 3	Option Connector (Door Control Receiver)	90980–10803
O 4	Overhead J/B	90980–12155
P 1	Power Steering Oil Pressure SW	90980–11428
P 2	Pressure SW	90980–11149
P 3	Pressure SW	90980–10943
P 4	Parking Brake SW	90980–10871
P 5	Power Outlet (Front)	90980–10760
P 6	PTC Heater	90980–11385
P 7	PTC Heater	90980–10958
P 8	Personal Light	90980–11923
P 9	Power Outlet (Rear)	90980–10760

Code	Part Name	Part Number
P10	Power Window Control SW Front LH (w/ Jam Protection)	90980–11947
	Power Window Control SW Front LH (w/o Jam Protection)	90980–10789
P11	Power Window Control SW Front RH (w/ Jam Protection)	90980–11947
	Power Window Control SW Front RH (w/o Jam Protection)	90980–10789
P12	Power Window Control SW Rear LH (w/ Jam Protection)	90980–11947
	Power Window Control SW Rear LH (w/o Jam Protection)	90980–10789
P13	Power Window Control SW Rear RH (w/ Jam Protection)	90980–11947
	Power Window Control SW Rear RH (w/o Jam Protection)	90980–10789
P14	Power Window Motor Front LH	90980–10797
P15	Power Window Motor Front RH	
P16	Power Window Motor Rear LH	
P17	Power Window Motor Rear RH	
P18	Pretensioner LH	90980–12253
P19	Pretensioner RH	
P20	Power Seat Control SW (Driver's Seat Lumbar Support Control)	90980–10789
P21	Power Seat Control SW (Driver's Seat)	90980–10997
P22	Power Seat Control SW (Front Passenger's Seat)	
P23	Power Seat Motor (Driver's Seat Front Vertical Control)	90980–10825
P24	Power Seat Motor (Driver's Seat Lifter Control)	
P25	Power Seat Motor (Driver's Seat Lumbar Support Control)	
P26	Power Seat Motor (Driver's Seat Reclining Control)	
P27	Power Seat Motor (Driver's Seat Slide Control)	
P28	Power Seat Motor (Front Passenger's Seat Reclining Control)	
P29	Power Seat Motor (Front Passenger's Seat Slide Control)	
R 1	Radio and Player	90980–10997
R 2	Radio and Player	90980–12183
R 3	Radio and Player	90980–12038
R 4	Radio and Player	90980–10996
R 5	Radio and Player	90980–12259
R 6	Rear Blower SW	90980–11118
R 7	Rear Cooler Control SW (Automatic A/C)	90980–11923
	Rear Cooler Control SW (Manual A/C)	90980–12012
R 8	Rear Diff. Lock Control ECU	90980–11541
R 9	Rear Diff. Lock SW	90980–10631

Note: Not all of the above part numbers of the connector are established for the supply.

Code	Part Name	Part Number
R10	Rear Fog Light SW	90980–12113
R11	Remote Control Mirror SW	90980–11657
R12	Rheostat	90980–11989
R13	Rear Combination Light LH	90980–10797
R14	Rear Combination Light LH	90980–11292
R15	Rear Combination Light RH	90980–10797
R16	Rear Combination Light RH	90980–11292
R17	Rear Cooler Amplifier	90980–10879
R18	Rear Cooler Blower Motor	90980–10214
R19	Rear Cooler Blower Resistor	90980–10976
R20	Rear Cooler Magnetic Valve	90980–10860
R21	Rear Cooler Power Transistor	90980–10171
R22	Rear Cooler Relay	–
R23	Rear Cooler Thermistor	90980–10825
R24	Rear Diff. Lock Motor	90980–10897
R25	Rear Door Speaker LH	90980–10935
R26	Rear Door Speaker RH	
R27	Rear Fog Light LH	90980–11019
R28	Rear Fog Light RH	
R29	Rear Height Control Valve	90980–11143
R30	Rear Speaker LH	90980–10935
R31	Rear Speaker RH	
R32	Rear Window Defogger	90980–10870
R33	Rear Wiper Motor (Spare Tire–Back Door Mounted)	90980–10908
	Rear Wiper Motor (Spare Tire–Under Floor Mounted)	90980–10795
S 1	Skid Control ECU with Actuator	90980–12020
S 2	Speed Sensor (Combination Meter)	90980–11143
S 3	Speed Sensor (ECT)	90980–11156
S 4	Starter (Diesel)	90980–09529
	Starter (3RZ–FE, 1GR–FE)	90980–09463
S 5	Starter (1KD–FTV, 5L–E)	90980–11184
	Starter (1KZ–TE)	
	Starter (3RZ–FE, 1GR–FE)	90980–11400
S 6	Suction Control Valve No.1	90980–11285
S 7	Suction Control Valve No.2	90980–11284
S 8	Seat Heater SW Front LH	90980–10964
S 9	Seat Heater SW Front RH	90980–10933
S10	Shift Lock Control ECU	90980–12183
S11	Skid Control ECU	90980–11638
S12	Skid Control ECU	90980–11476
S13	Skid Control ECU	90980–11637
S14	Skid Control ECU	90980–11935
S15	Steering Sensor	90980–12155
S16	Stereo Component Amplifier	90980–10848
S17	Stereo Component Amplifier	90980–11877

Code	Part Name	Part Number
S18	Stop Light SW	90980–11118
S19	Suspension Control ECU	90980–12150
S20	Suspension Control ECU	90980–12149
S21	Suspension Control ECU	90980–12151
S22	Side Airbag Sensor Front LH	90980–12225
S23	Side Airbag Sensor Front RH	
S24	Side Airbag Sensor Rear LH	
S25	Side Airbag Sensor Rear RH	
S26	Seat Heater (Driver's Seat)	90980–10797
S27	Seat Heater (Front Passenger's Seat)	
S28	Side Airbag Squib LH	90980–11864
S29	Side Airbag Squib RH	
T 1	Theft Deterrent Horn	90980–10619
T 2	Throttle Control Motor	90980–11144
T 3	Throttle Open SW	90980–11156
T 4	Throttle Position Sensor	90980–11261
T 5	Timing Control Valve	90980–11285
T 6	Transfer Actuator	90980–11664
T 7	Turbo Pressure Sensor	90980–10845
T 8	Theft Deterrent ECU	90980–12169
T 9	Transponder Key Computer (Except 3RZ–FE Unleaded Gasoline)	90980–11911
	Transponder Key Computer (3RZ–FE Unleaded Gasoline)	90980–12094
T10	Turn Signal Flasher	90980–10799
T11	Theft Deterrent Siren (LHD)	90980–11349
	Theft Deterrent Siren (RHD)	90980–10799
T12	Trailer Socket	90980–10797
T13	Turbo Charger Conpensate Resistor	90980–11163
T14	Throttle Control Motor	90980–11858
	Throttle Position Sensor	
T15	Turbine Speed Sensor	90980–11156
V 1	Vacuum Sensor	90980–10845
V 2	Variable Resistor	90980–10902
V 3	Viscous Heater Magnetic Clutch	90980–11271
V 5	VRV (EGR)	90980–11162
V 6	VSC Check Connector	90980–11609
V 7	VSC Check Connector	90980–11612
V 8	VSV (EGR Cut) (1KD–FTV)	90980–11156
	VSV (EGR Cut) (1KZ–TE)	90980–11149
V 9	VSV (Engine Mount)	90980–11149
V10	VSV (EVAP)	90980–11156
V11	VSV (Pressure Charge Valve)	90980–11149
V12	Viscous Heater Amplifier	90980–11913
V13	VSC Warning Buzzer	90980–10906
V14	Vanity Light LH	90980–12322
V15	Vanity Light RH	

L PART NUMBER OF CONNECTORS

Code	Part Name	Part Number	Code	Part Name	Part Number
V16	VSV (EGR)	90980−11162			
V17	VSV (ACIS)	90980−11149			
V18	VVT Sensor LH	90980−10947			
V19	VVT Sensor RH				
W 1	Washer Motor	90980−11028			
W 2	Water Temp. Sender	90980−11428			
W 3	Water Temp. Sensor (Except 1GR−FE)	90980−10737			
	Water Temp. Sensor (1GR−FE)	90980−10735			
W 4	Water Temp. Sensor (A/C)	90980−10860			
W 5	Woofer Speaker	90980−10795			
Y 1	Yaw Rate Sensor	90980−12080			

Note: Not all of the above part numbers of the connector are established for the supply.

Code	Part Name	Part Number	Code	Part Name	Part Number

HOW TO READ THIS SECTION

* The system shown here is an EXAMPLE ONLY. It is different to the actual circuit shown in the wiring diagram section.

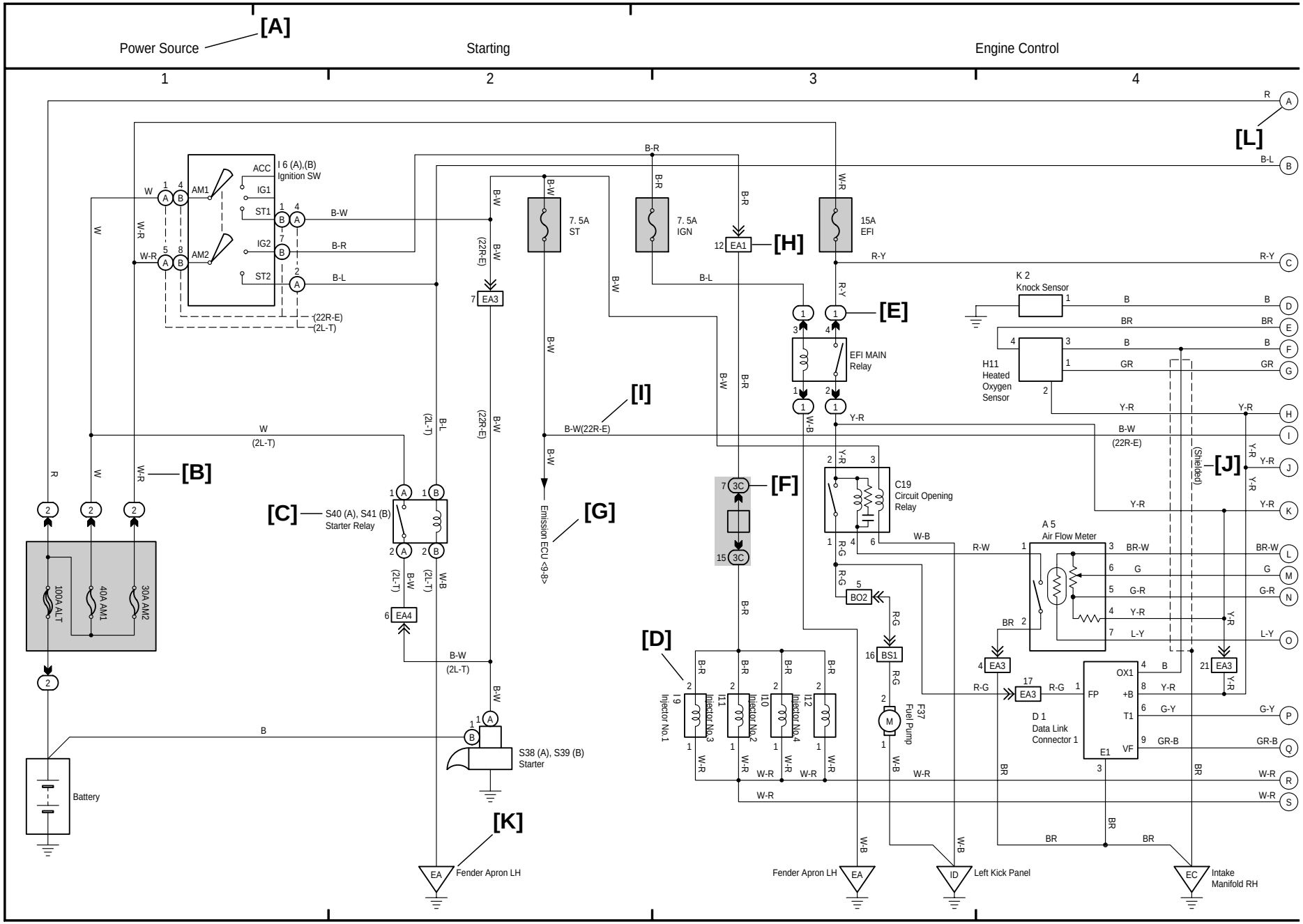

[A] : System Title

[B] : Indicates the wiring color.

Wire colors are indicated by an alphabetical code.

B	=	Black	W	=	White	BR	=	Brown
L	=	Blue	V	=	Violet	SB	=	Sky Blue
R	=	Red	G	=	Green	LG	=	Light Green
P	=	Pink	Y	=	Yellow	GR	=	Gray
O	=	Orange						

The first letter indicates the basic wire color and the second letter indicates the color of the stripe.

Example: L – Y

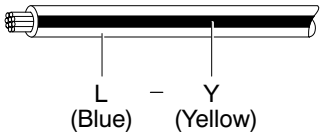

[C] : The position of the parts is the same as shown in the wiring diagram and wire routing.

[D] : Indicates the pin number of the connector. The numbering system is different for female and male connectors.

Example : Numbered in order from upper left to lower right / Numbered in order from upper right to lower left

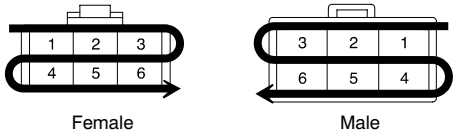

The numbering system for the overall wiring diagram is the same as above

[E] : Indicates a Relay Block. No shading is used and only the Relay Block No. is shown to distinguish it from the J/B.

Example : (1) Indicates Relay Block No.1

[F] : Junction Block (The number in the circle is the J/B No. and the connector code is shown beside it). Junction Blocks are shaded to clearly separate them from other parts.

Example:

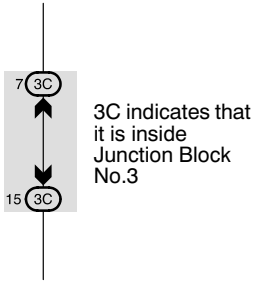

[G] : Indicates related system.

[H] : Indicates the wiring harness and wiring harness connector. The wiring harness with male terminal is shown with arrows (⩔). Outside numerals are pin numbers.

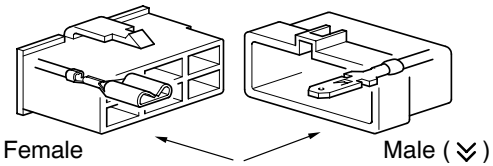

[I] : ( ) is used to indicate different wiring and connector, etc. when the vehicle model, engine type, or specification is different.

[J] : Indicates a shielded cable.

[K] : Indicates and located on ground point.

[L] : The same code occuring on the next page indicates that the wire harness is continuous.

SYSTEM INDEX

SYSTEMS	LOCATION
ABS	32–2
Accessory Meter	47–2
Active Height Control Suspension	33–2
Air Conditioner (Automatic A/C)	54–2
Air Conditioner (Manual A/C Except 1GR–FE)	55–3
Air Conditioner (Manual A/C 1GR–FE)	61–2
Back–Up Light (Diesel)	25–2
Back–Up Light (Gasoline)	24–2
Center Differential Lock	34–2
Charging (Gasoline)	6–2
Charging (1KD–FTV)	7–3
Charging (1KZ–TE, 5L–E)	8–2
Cigarette Lighter	44–3
Combination Meter	52–2
Condenser Fan	55–2
Cooler Box	55–10
Cruise Control (1GR–FE)	60–2
Cruise Control (1KD–FTV)	18–2
Cruise Control (1KZ–TE)	19–2
ECT and A/T Indicator (1GR–FE)	59–2
ECT and A/T Indicator (1KD–FTV)	16–2
ECT and A/T Indicator (1KZ–TE)	17–2
ECT and A/T Indicator (3RZ–FE Leaded Gasoline)	15–2

SYSTEMS	LOCATION
ECT and A/T Indicator (3RZ–FE Unleaded Gasoline)	14–2
Electric Modulated Air Suspension	33–2
Engine Control (1GR–FE)	58–2
Engine Control (1KD–FTV)	11–3
Engine Control (1KZ–TE)	12–3
Engine Control (3RZ–FE Leaded Gasoline)	10–2
Engine Control (3RZ–FE Unleaded Gasoline)	9–2
Engine Control (5L–E)	13–3
Engine Immobiliser System (1GR–FE)	58–19
Engine Immobiliser System (1KD–FTV)	11–16
Engine Immobiliser System (1KZ–TE)	12–12
Engine Immobiliser System (3RZ–FE Leaded Gasoline)	10–8
Engine Immobiliser System (3RZ–FE Unleaded Gasoline)	9–9
Engine Immobiliser System (5L–E)	13–8
Front Fog Light	23–2
Front Wiper and Washer	36–2
Fuel Heater	7–4
Headlight Beam Level Control	26–2
Headlight Cleaner	27–2
Horn	44–2
Ignition (1GR–FE)	57–2
Ignition (3RZ–FE Leaded Gasoline)	5–2
Ignition (3RZ–FE Unleaded Gasoline)	5–3

SYSTEM INDEX

SYSTEMS	LOCATION
Illumination	20–2
Mirror Heater	42–2
Moon Roof	41–2
Multiplex Communication System (LHD)	1–4
Multiplex Communication System (RHD)	2–4
∗ Door Lock Control	
∗ Double Locking	
∗ Headlight (w/ Daytime Running Light)	
∗ Headlight (w/o Daytime Running Light)	
∗ Interior Light	
∗ Key Reminder	
∗ Light Auto Turn Off	
∗ Power Window (w/ Jam Protection)	
∗ Seat Belt Warning	
∗ Theft Deterrent	
∗ Wireless Door Lock Control	
Navigation System (LHD)	48–3
Navigation System (RHD)	49–3
Option Connector (Wireless Door Lock Control)	40–2
Power Outlet	44–4
Power Seat	45–2
Power Source	1~61–1
Power Window (LHD w/o Jam Protection)	38–2
Power Window (RHD w/o Jam Protection)	39–2
Radio and Player (Built–in Type Amplifier)	51–2
Radio and Player (Separate Type Amplifier)	50–2
Rear Air Conditioner (Automatic A/C)	54–13
Rear Air Conditioner (Manual A/C)	55–7

SYSTEMS	LOCATION
Rear Differential Lock	35–2
Rear Fog Light	23–4
Rear Window Defogger	43–2
Rear Wiper and Washer	37–2
Remote Control Mirror	41–3
Seat Heater	46–3
Shift Lock	43–4
SRS	28–2
Starting (Diesel)	4–2
Starting (1GR–FE)	56–2
Starting (3RZ–FE)	3–2
Stop Light	22–2
Taillight	20–2
Trailer Towing	20–13
Turn Signal and Hazard Warning Light	21–2
Viscous Heater	53–2
VSC (LHD A/T)	29–2
VSC (LHD M/T)	30–2
VSC (RHD)	31–2
4WD	35–4

1 LAND CRUISER / LAND CRUISER PRADO

(Cont. next page)

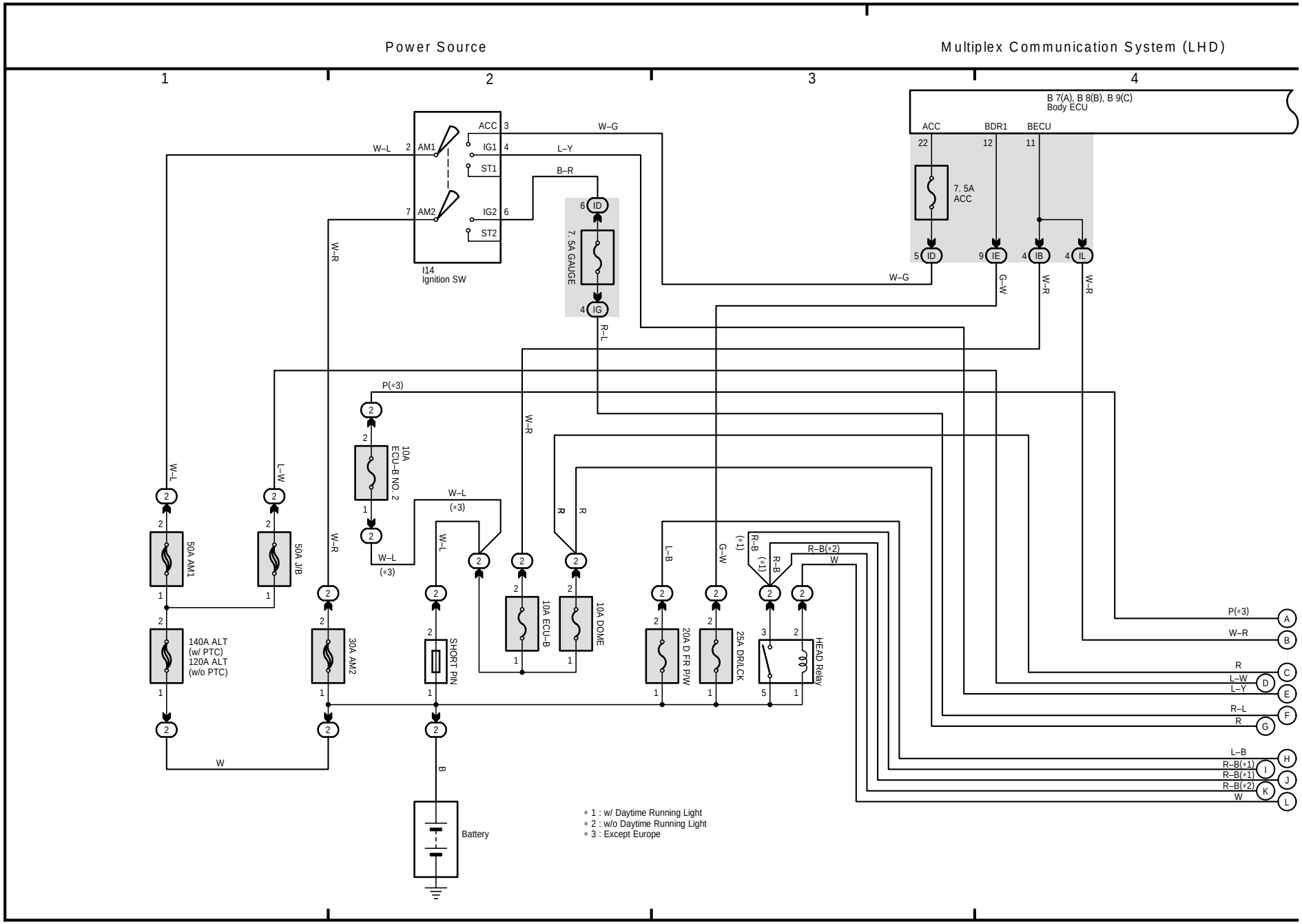

(Cont. next page)

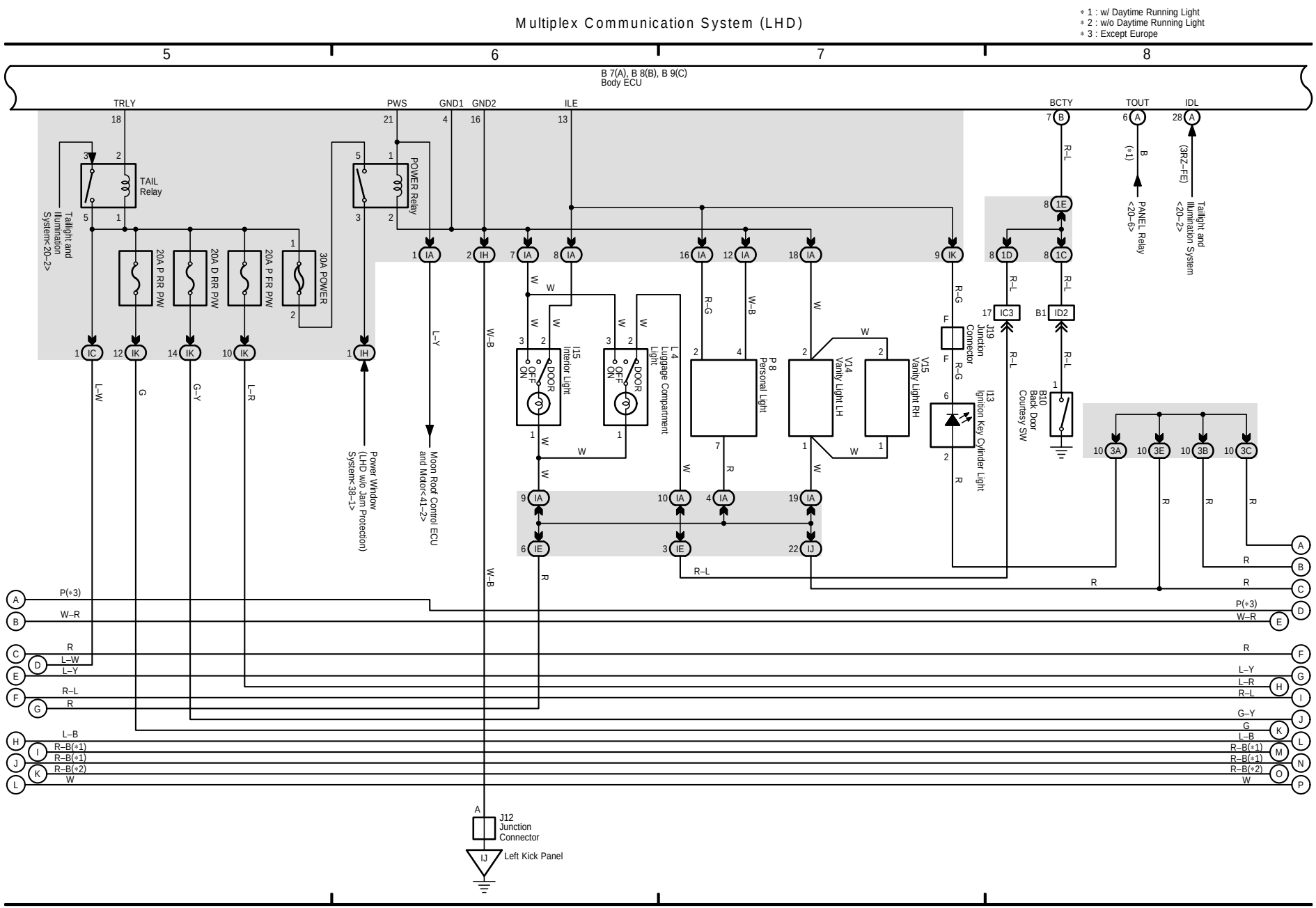

1 LAND CRUISER / LAND CRUISER PRADO (Cont' d)

(Cont. next page)

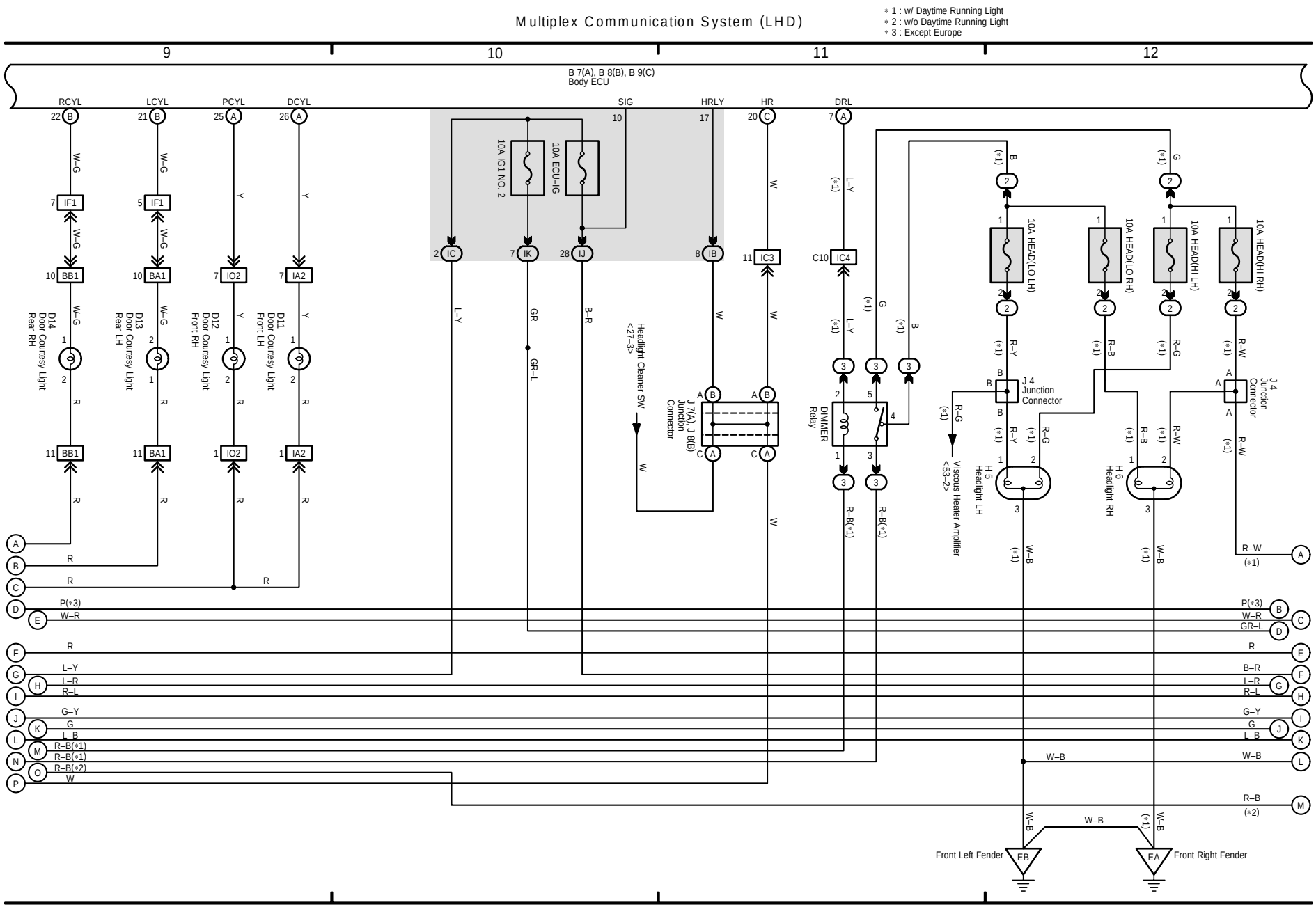

(Cont. next page)

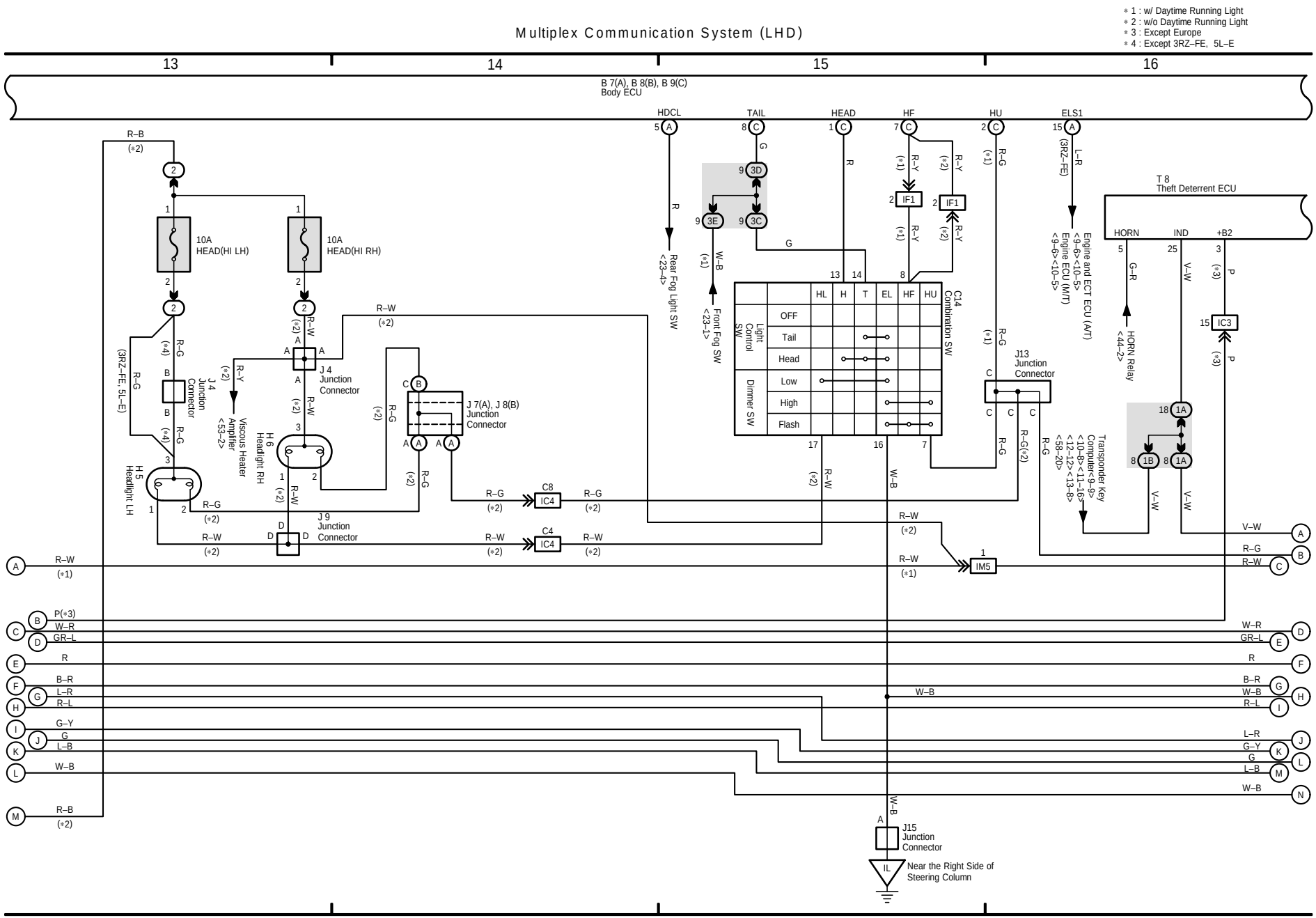

1 LAND CRUISER / LAND CRUISER PRADO (Cont' d)

(Cont. next page)

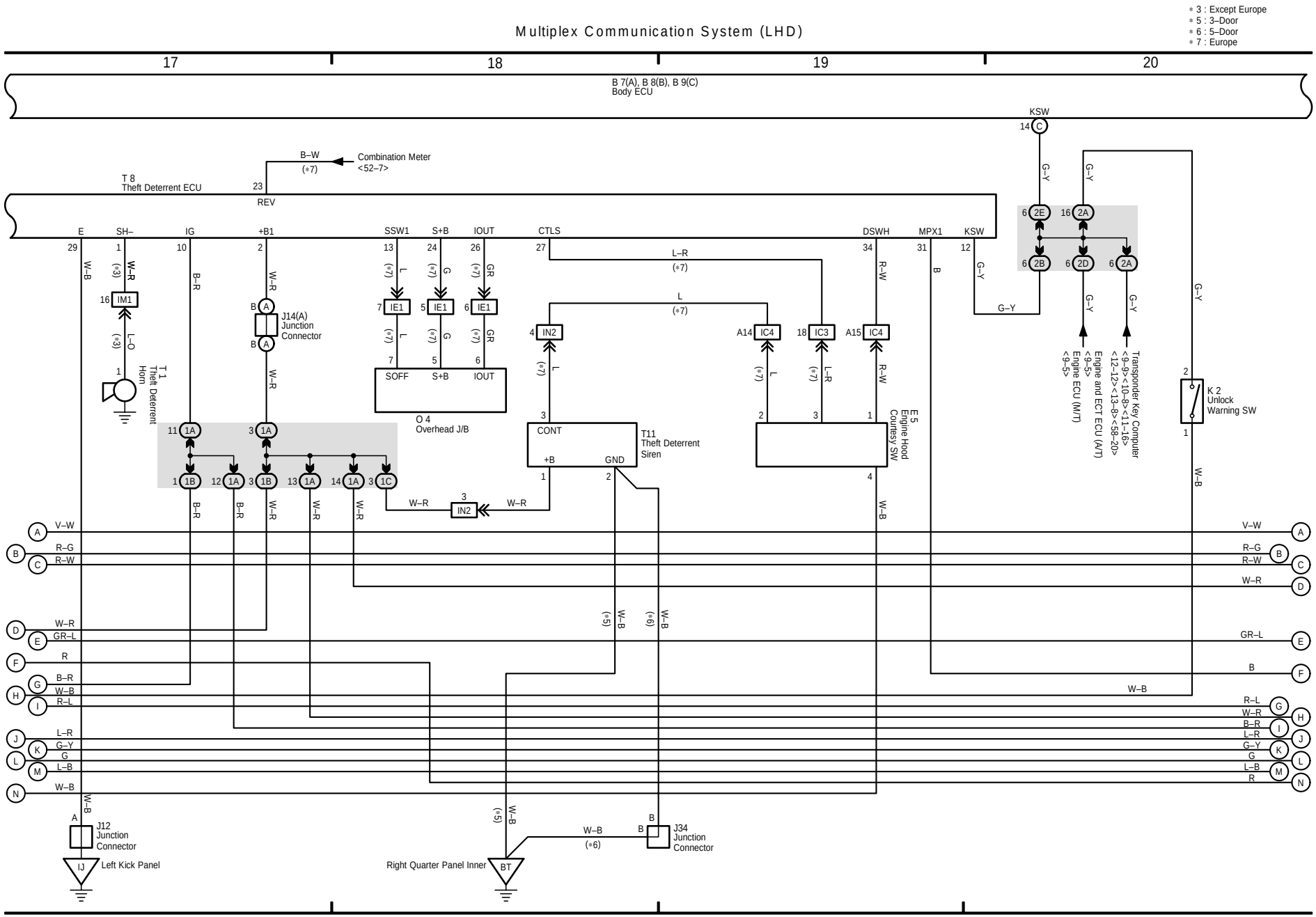

(Cont. next page)

Multiplex Communication System (LHD)

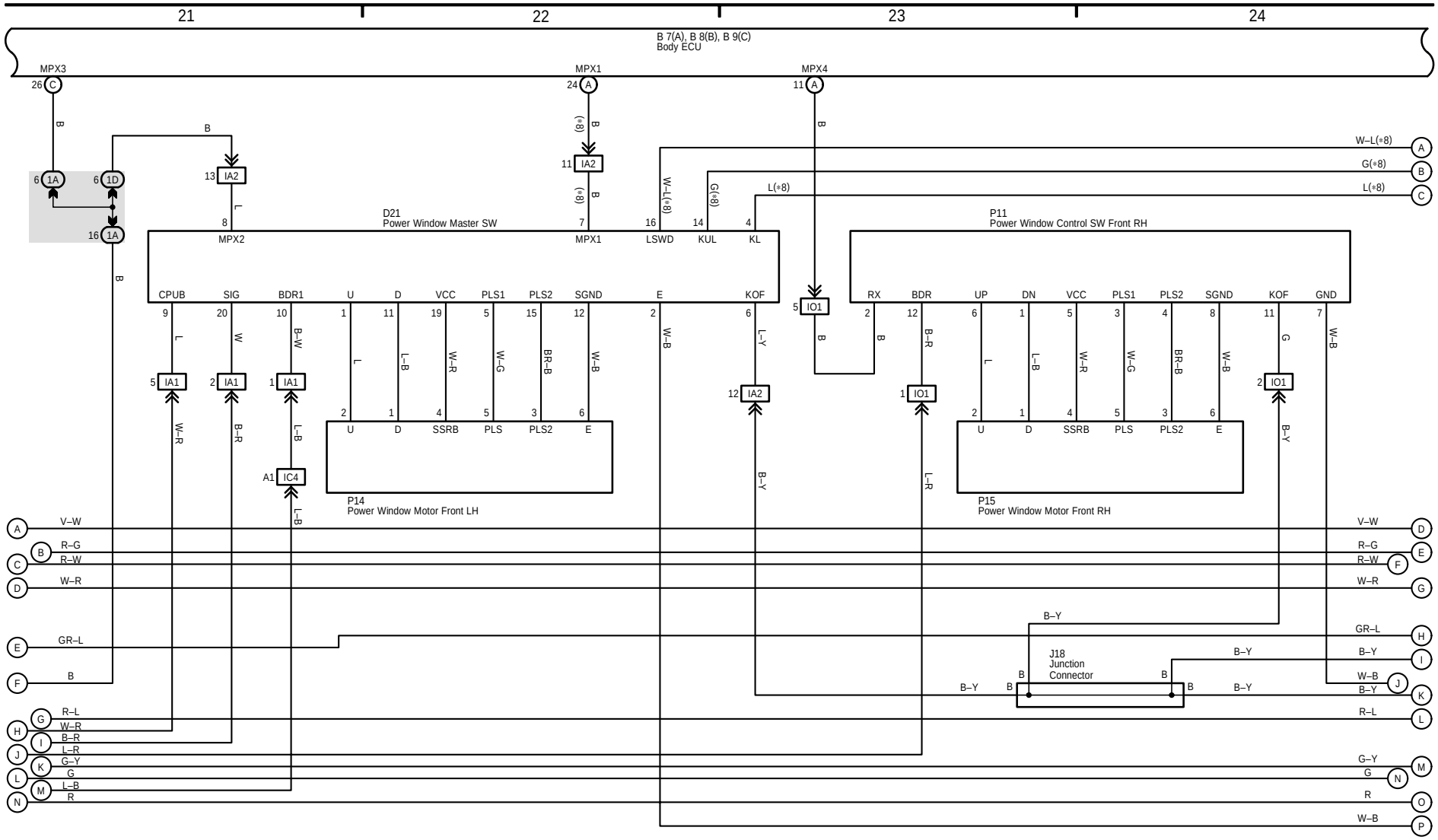

1 LAND CRUISER / LAND CRUISER PRADO (Cont' d)

(Cont. next page)

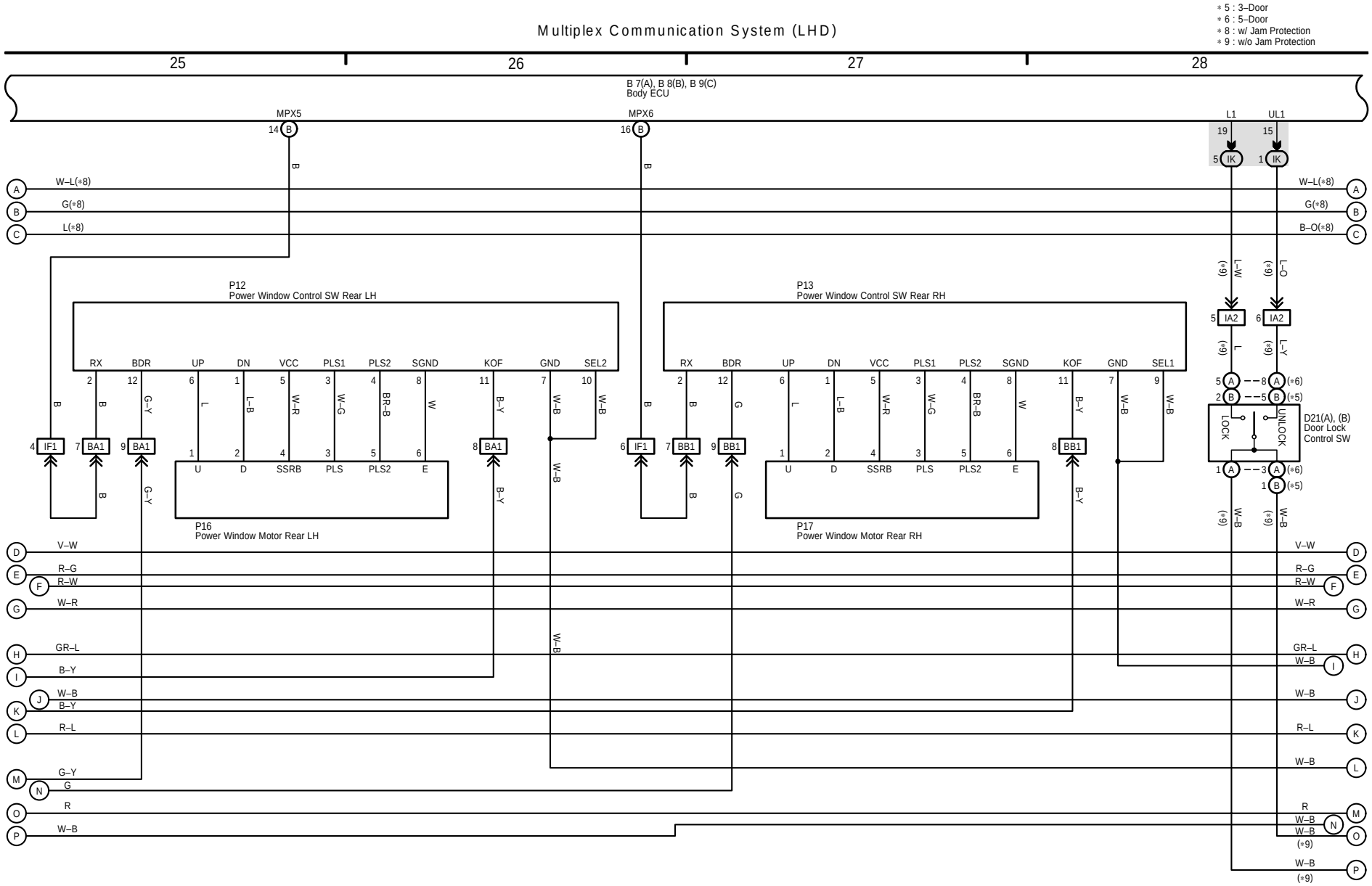

(Cont. next page)

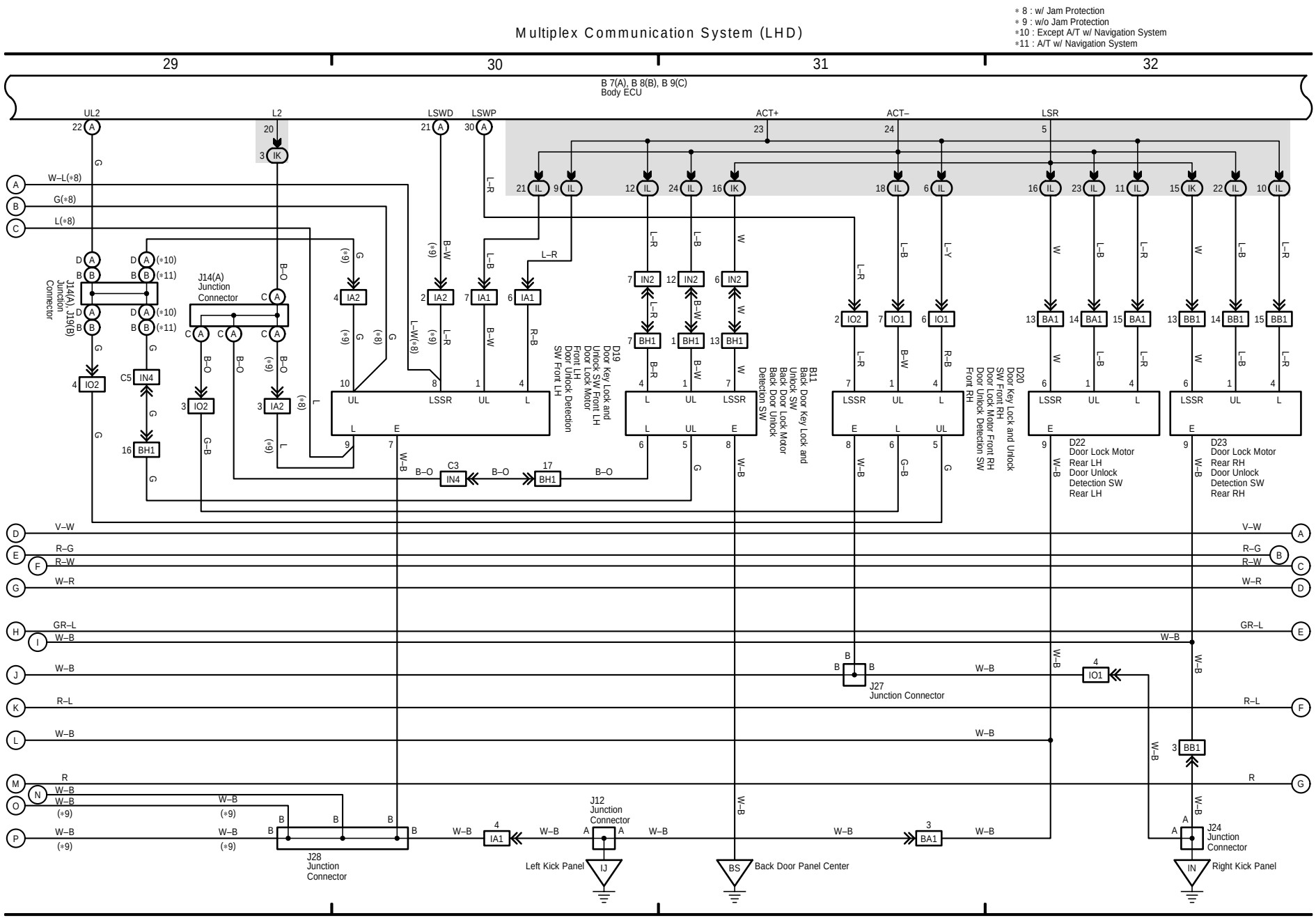

1 LAND CRUISER / LAND CRUISER PRADO (Cont' d)

(Cont. next page)

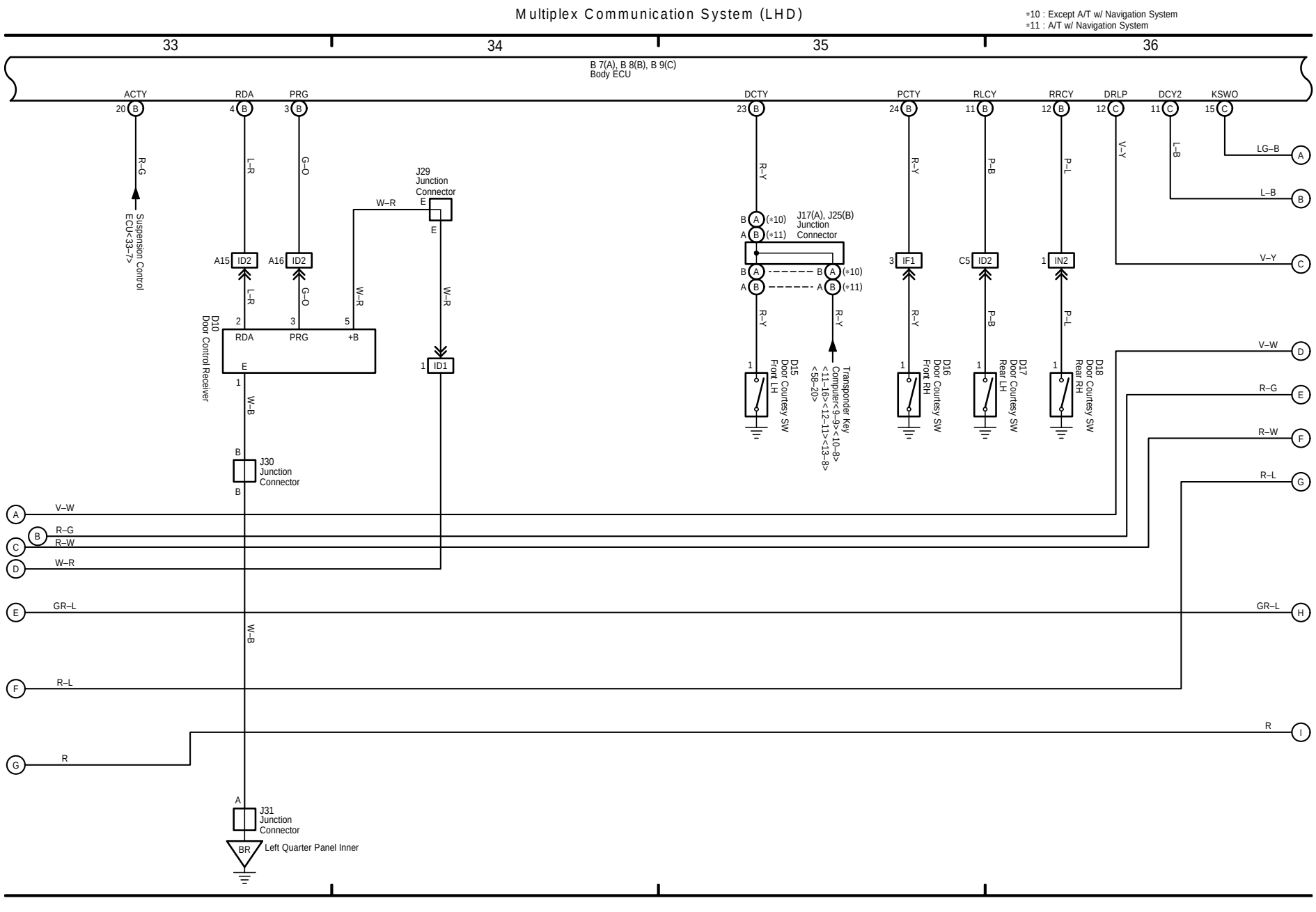

1 LAND CRUISER / LAND CRUISER PRADO (Cont' d)

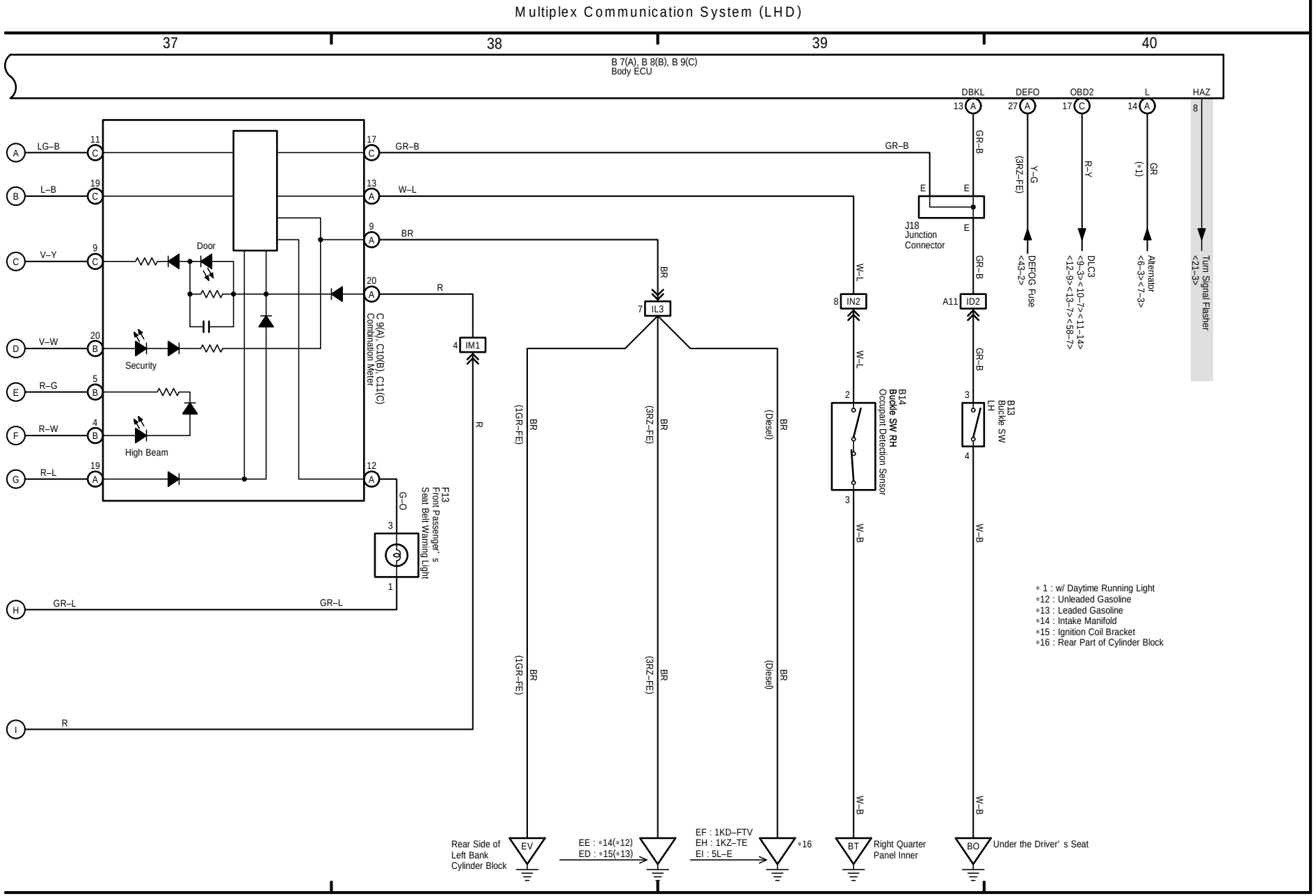

2 LAND CRUISER / LAND CRUISER PRADO

(Cont. next page)

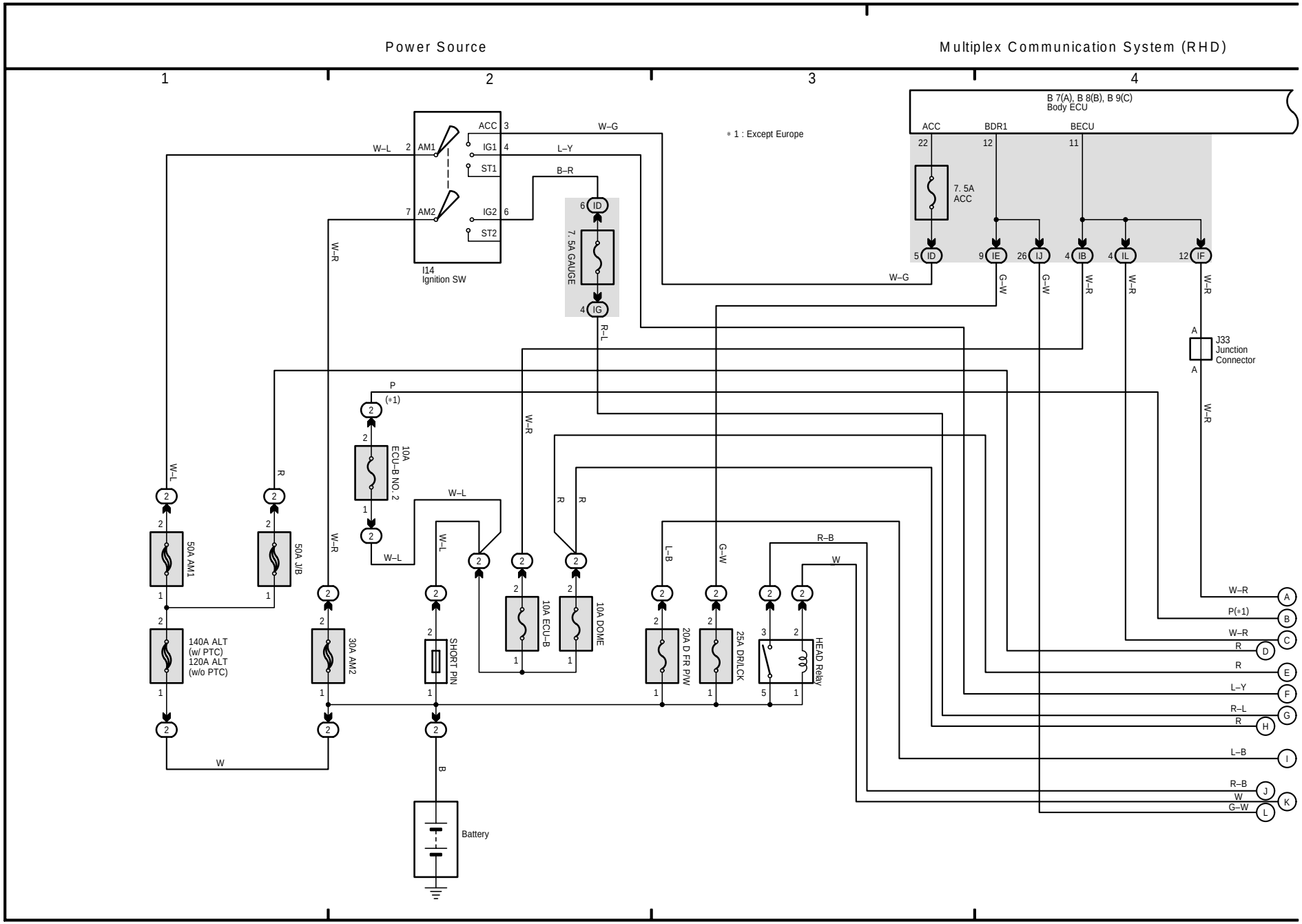

(Cont. next page)

Multiplex Communication System (RHD)

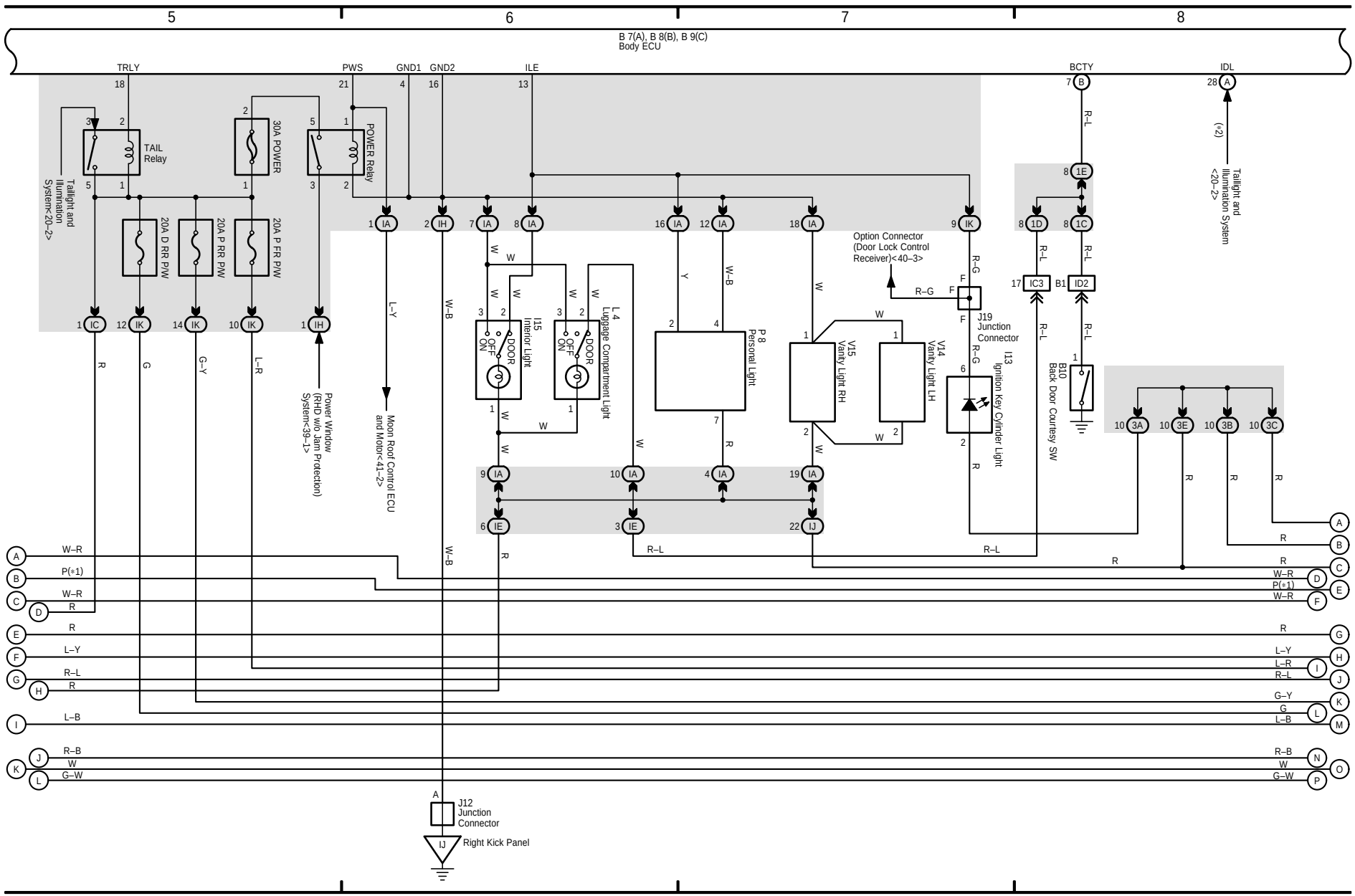

2 LAND CRUISER / LAND CRUISER PRADO (Cont' d)

(Cont. next page)

Multiplex Communication System (RHD)

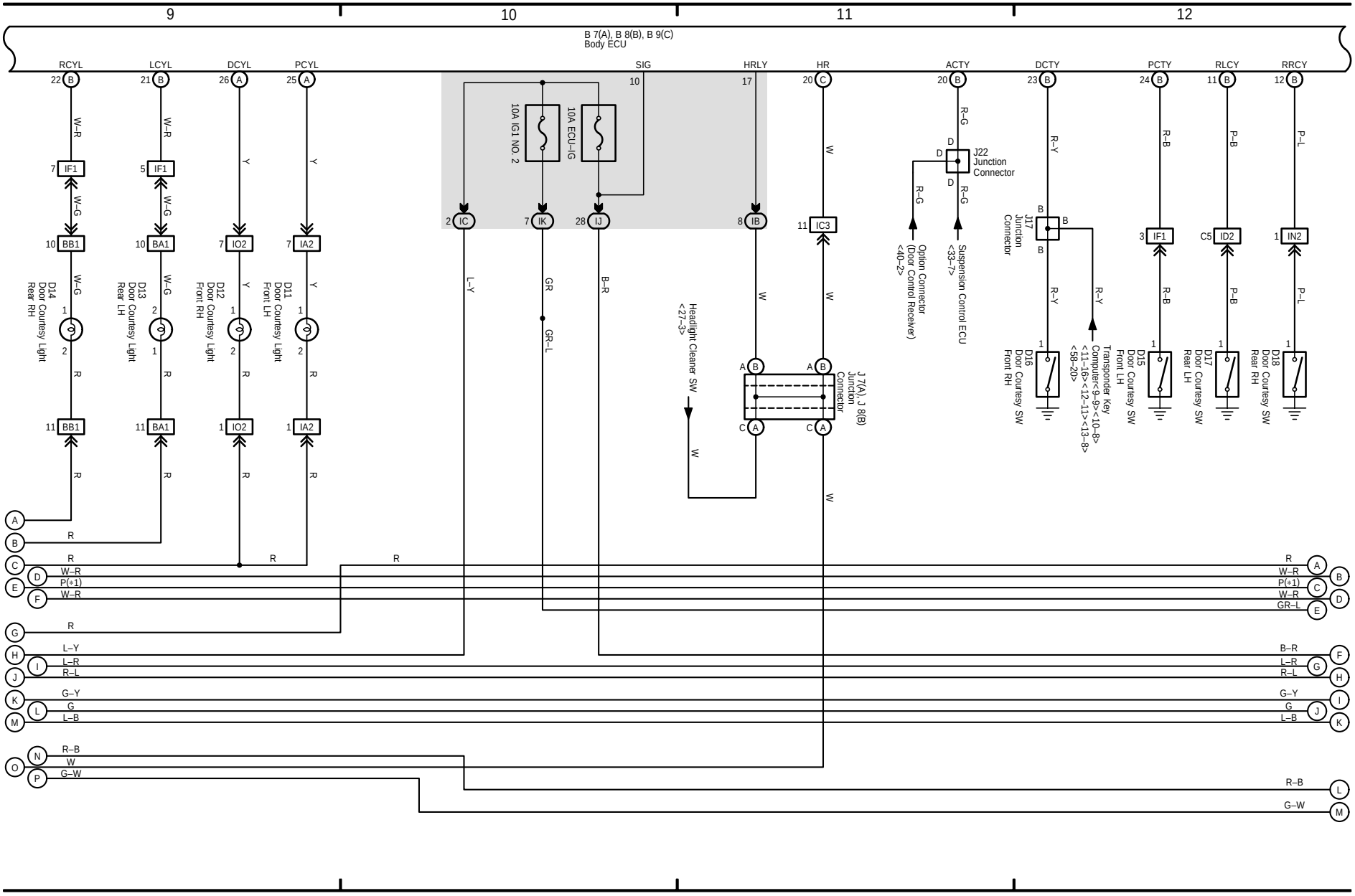

(Cont. next page)

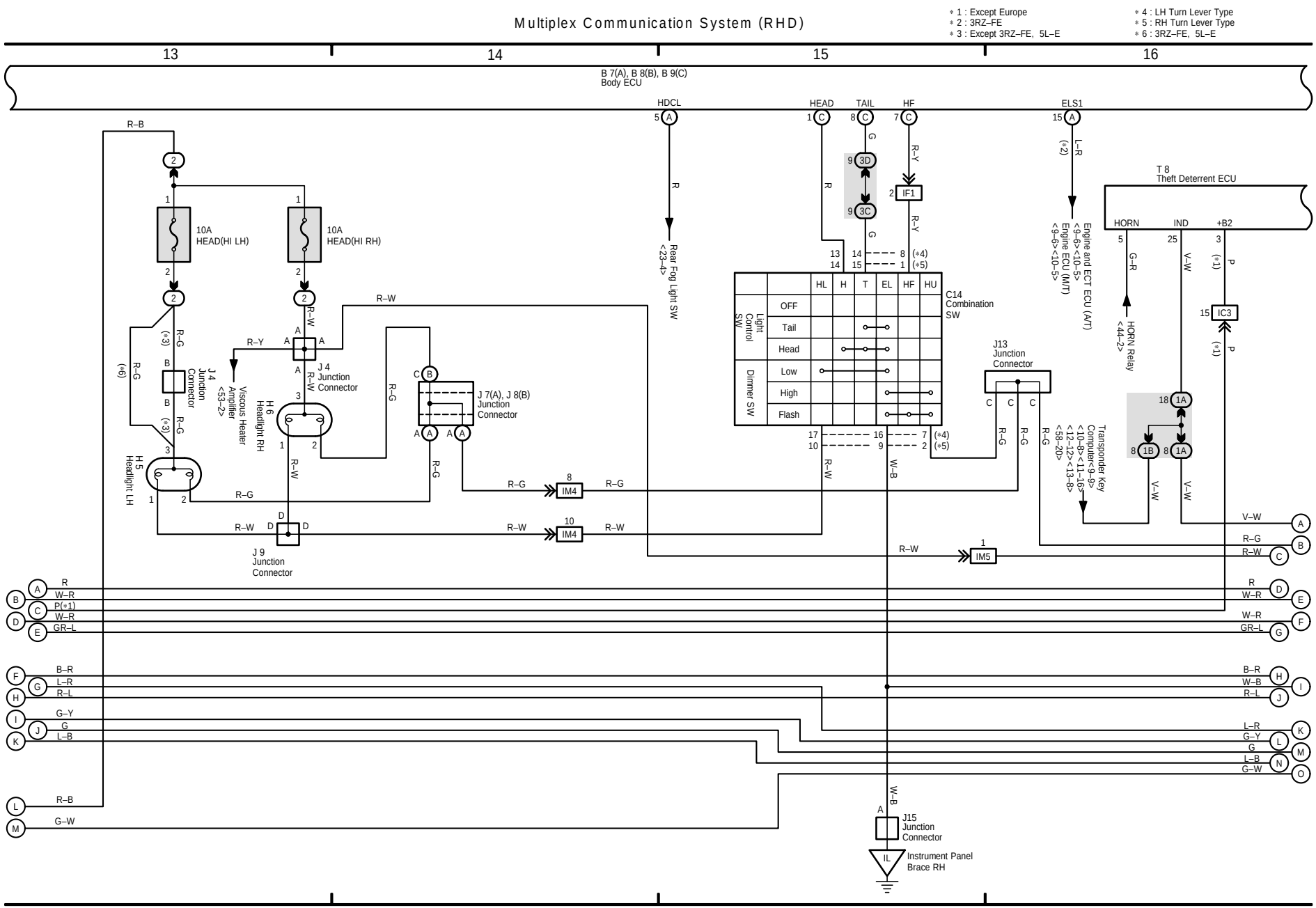

2 LAND CRUISER / LAND CRUISER PRADO (Cont' d)

(Cont. next page)

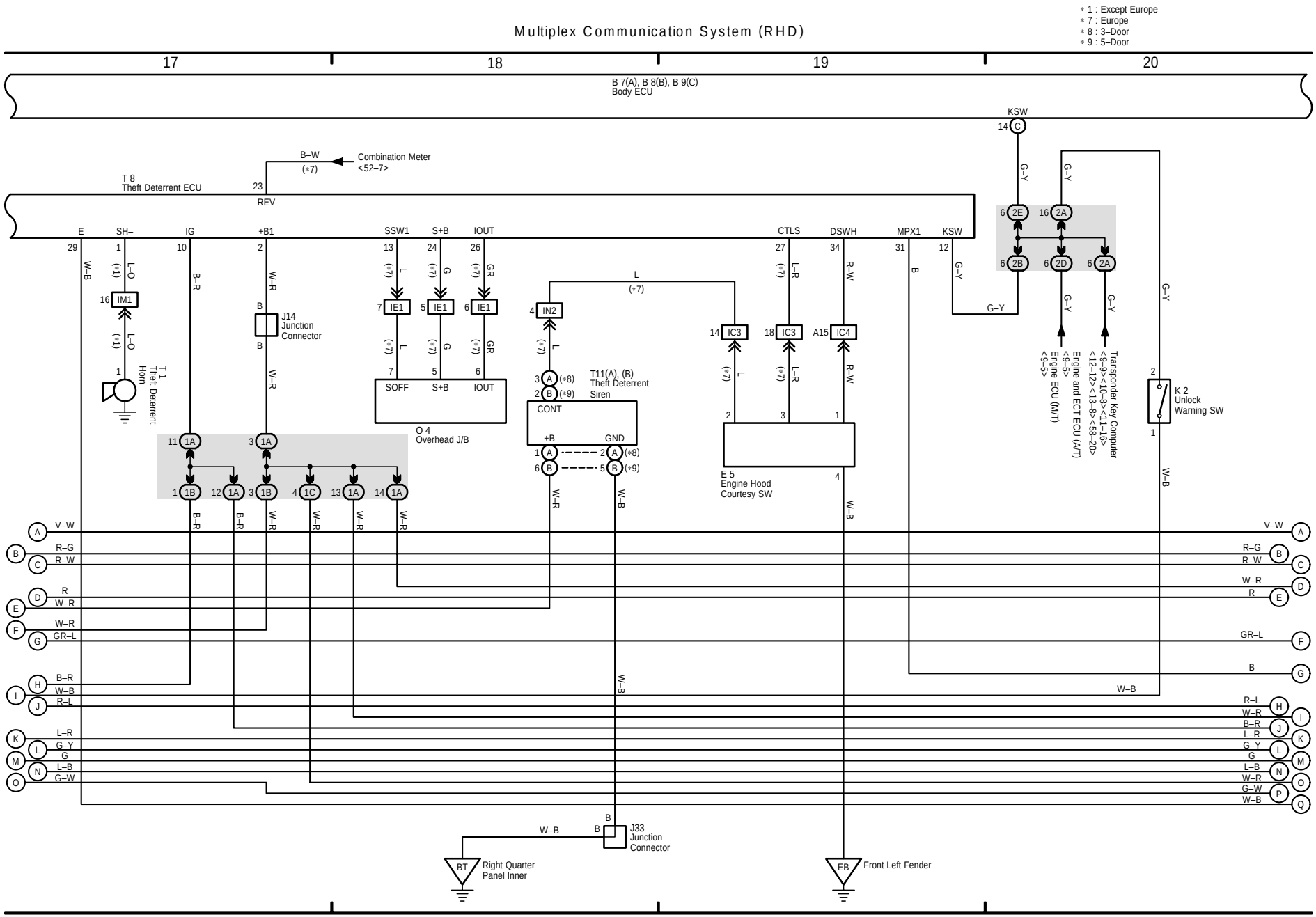

(Cont. next page)

Multiplex Communication System (RHD)

*10 : w/ Jam Protection
*11 : w/ Double Locking

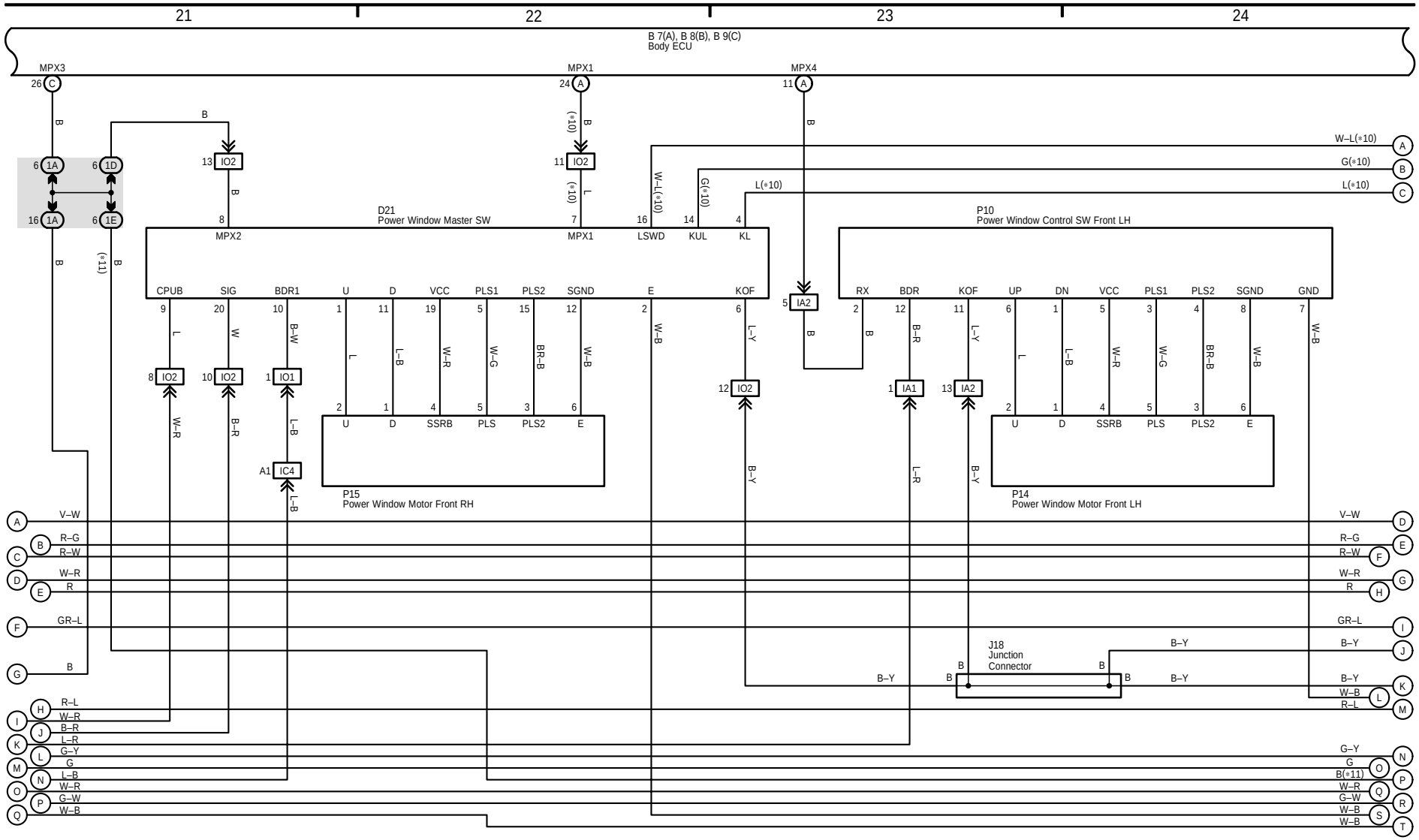

2 LAND CRUISER / LAND CRUISER PRADO (Cont' d)

(Cont. next page)

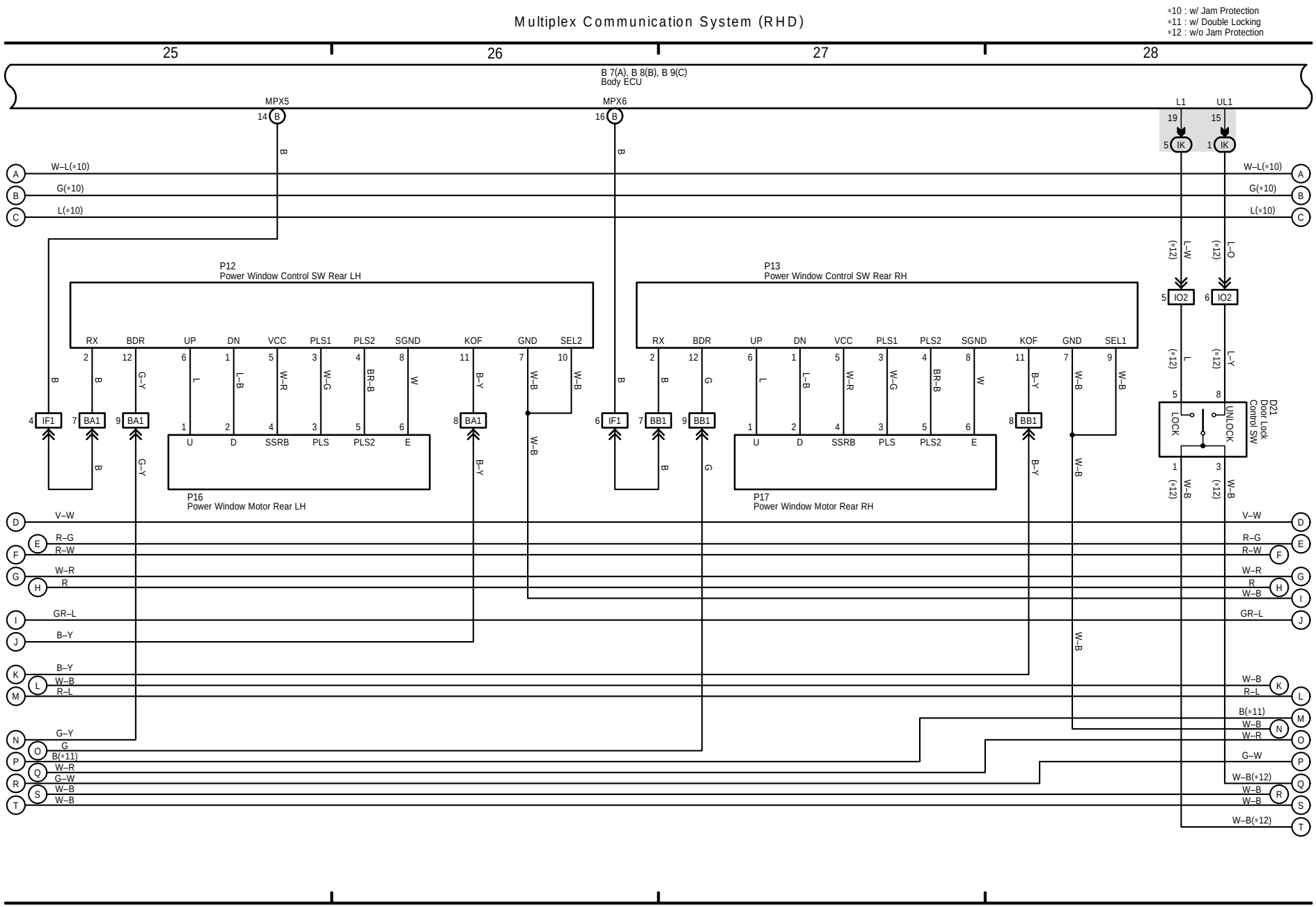

(Cont. next page)

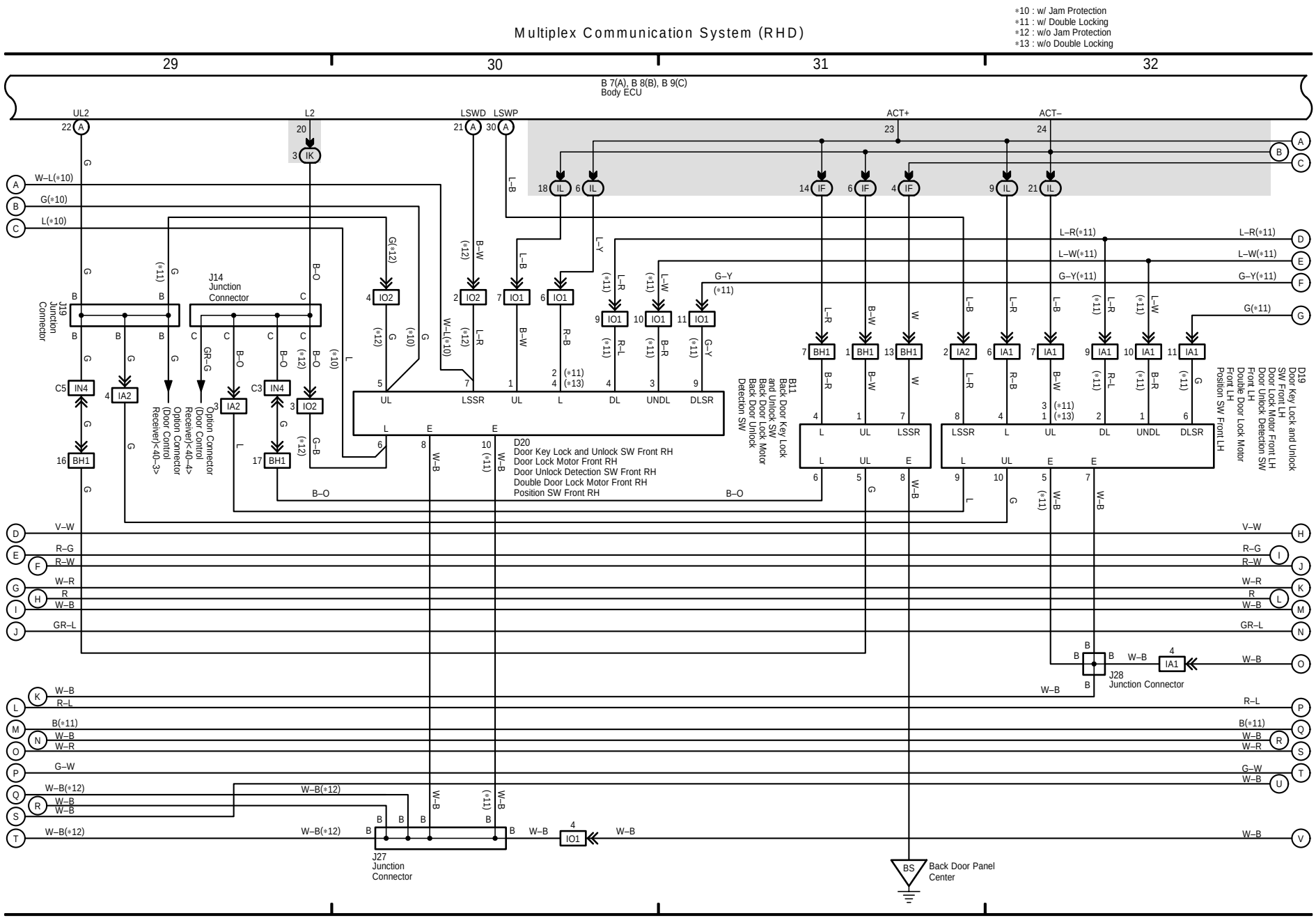

2 LAND CRUISER / LAND CRUISER PRADO (Cont' d)

(Cont. next page)

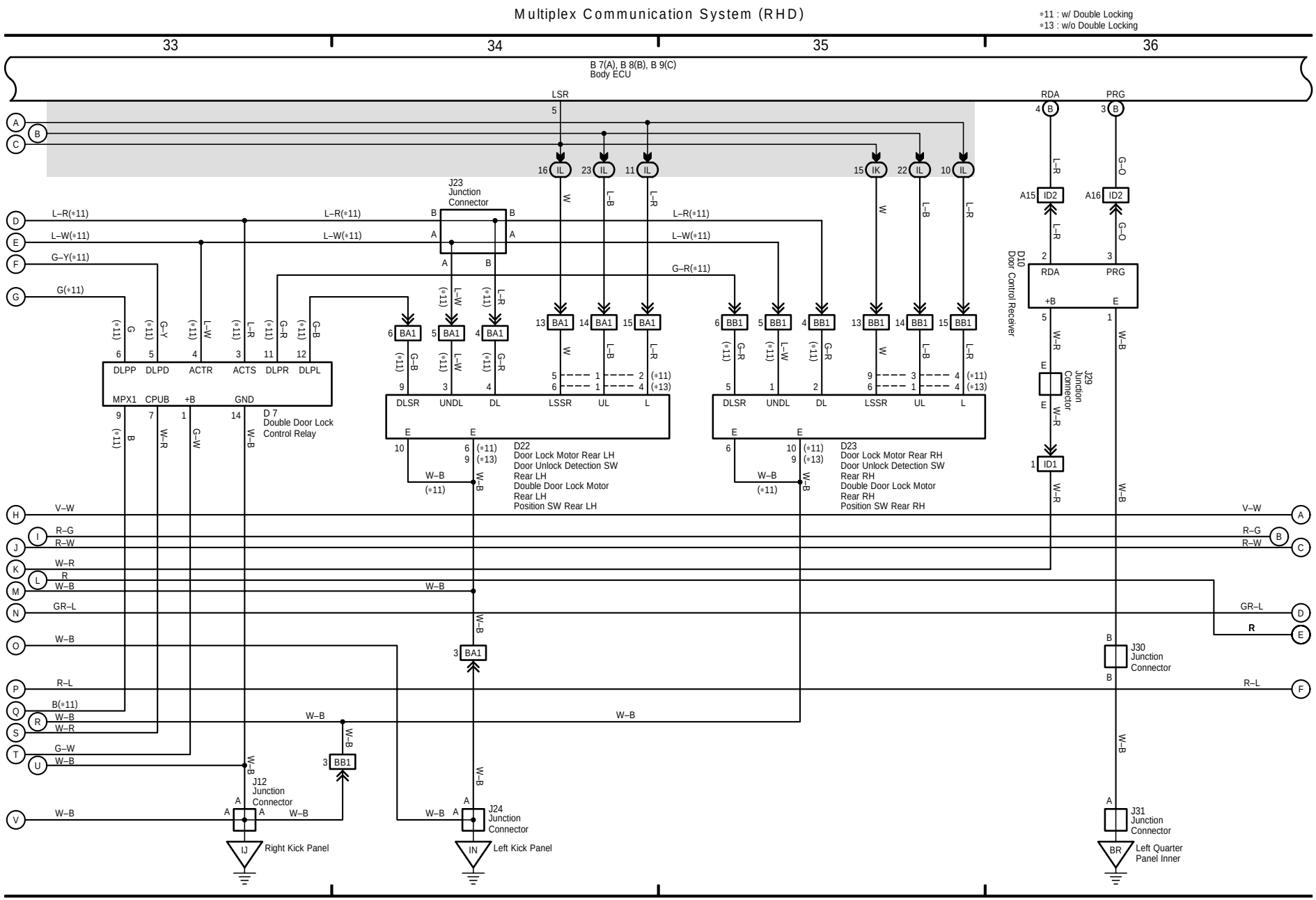

2 LAND CRUISER / LAND CRUISER PRADO (Cont' d)

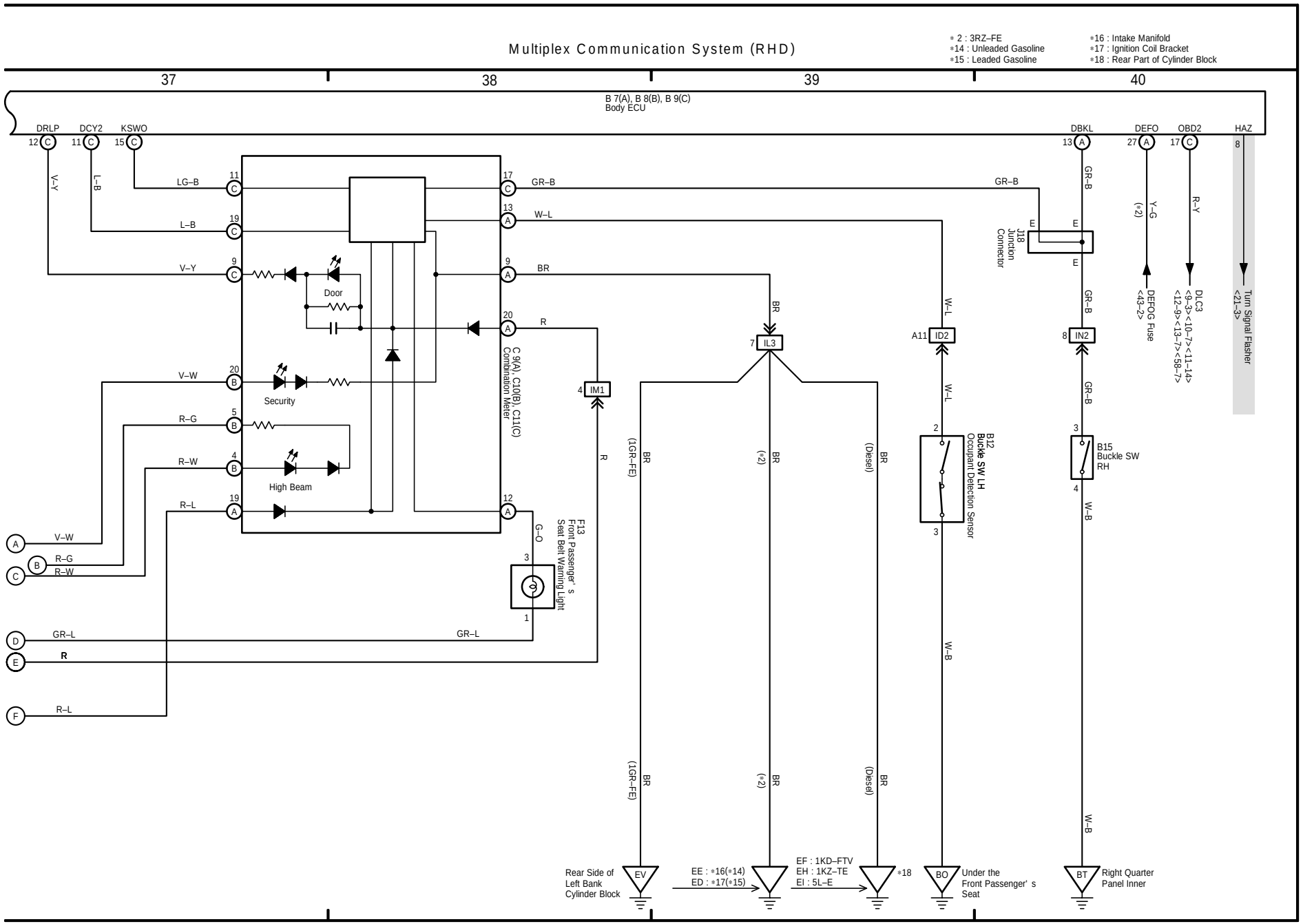

3 LAND CRUISER / LAND CRUISER PRADO

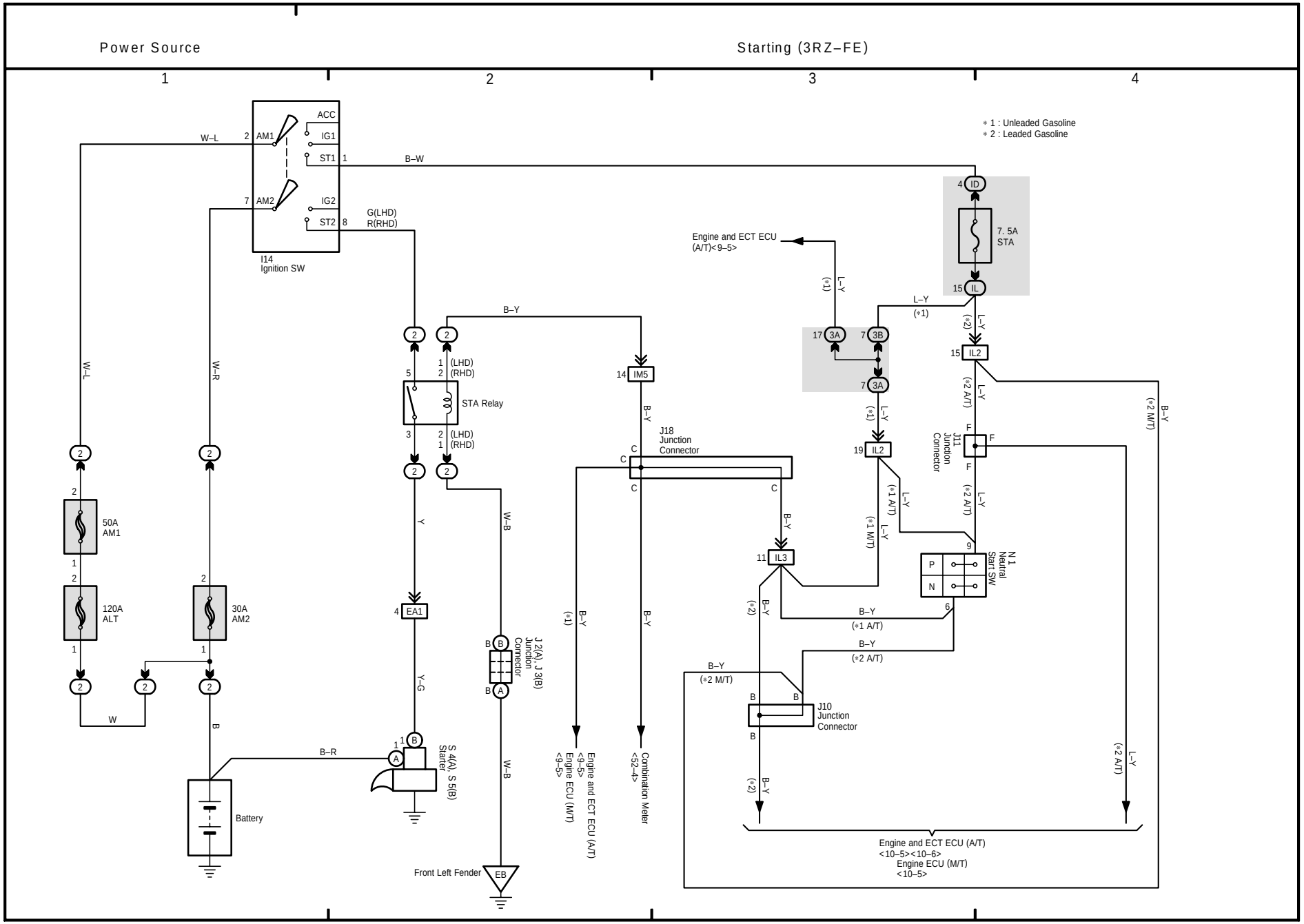

4 LAND CRUISER / LAND CRUISER PRADO

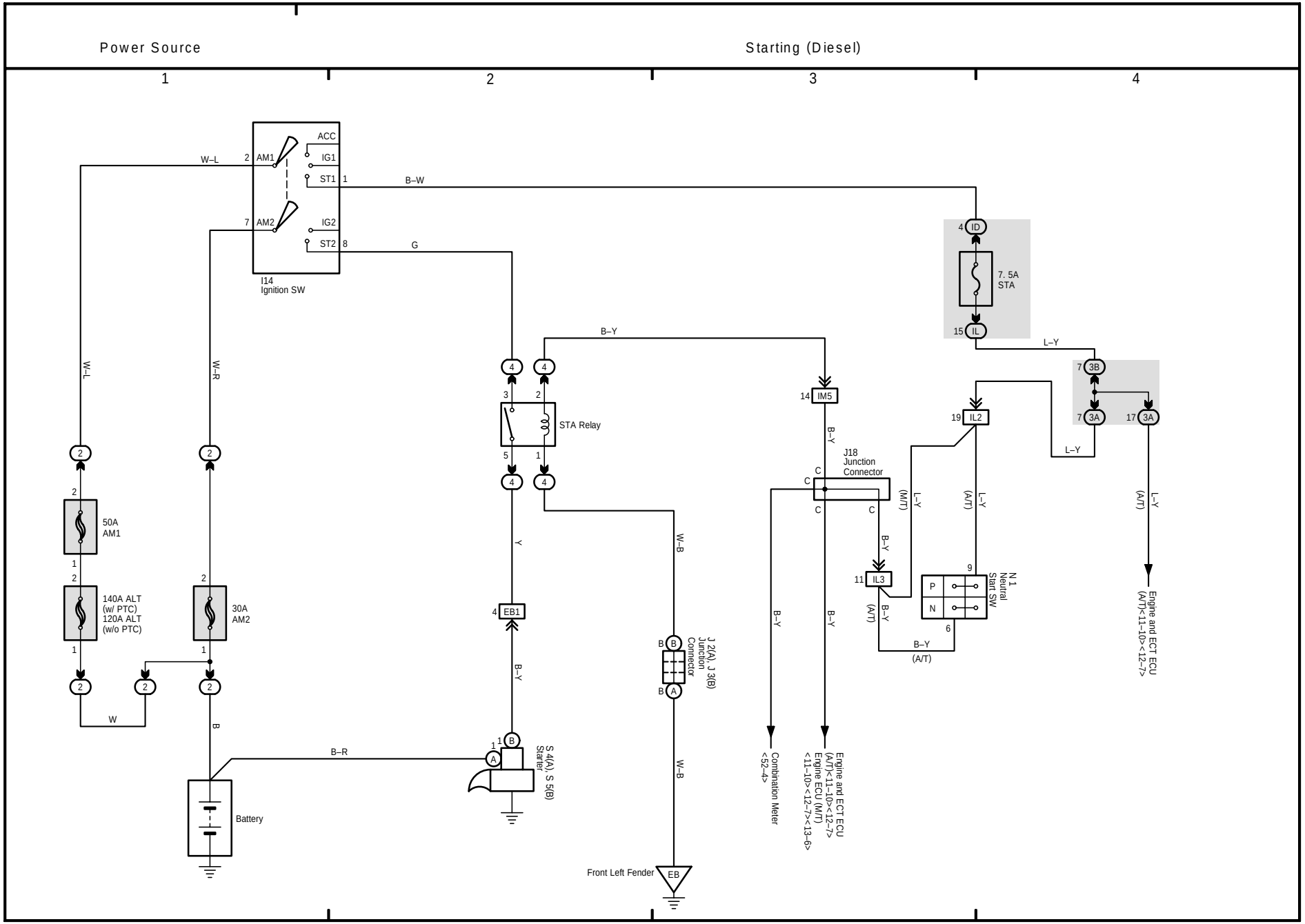

5 LAND CRUISER / LAND CRUISER PRADO

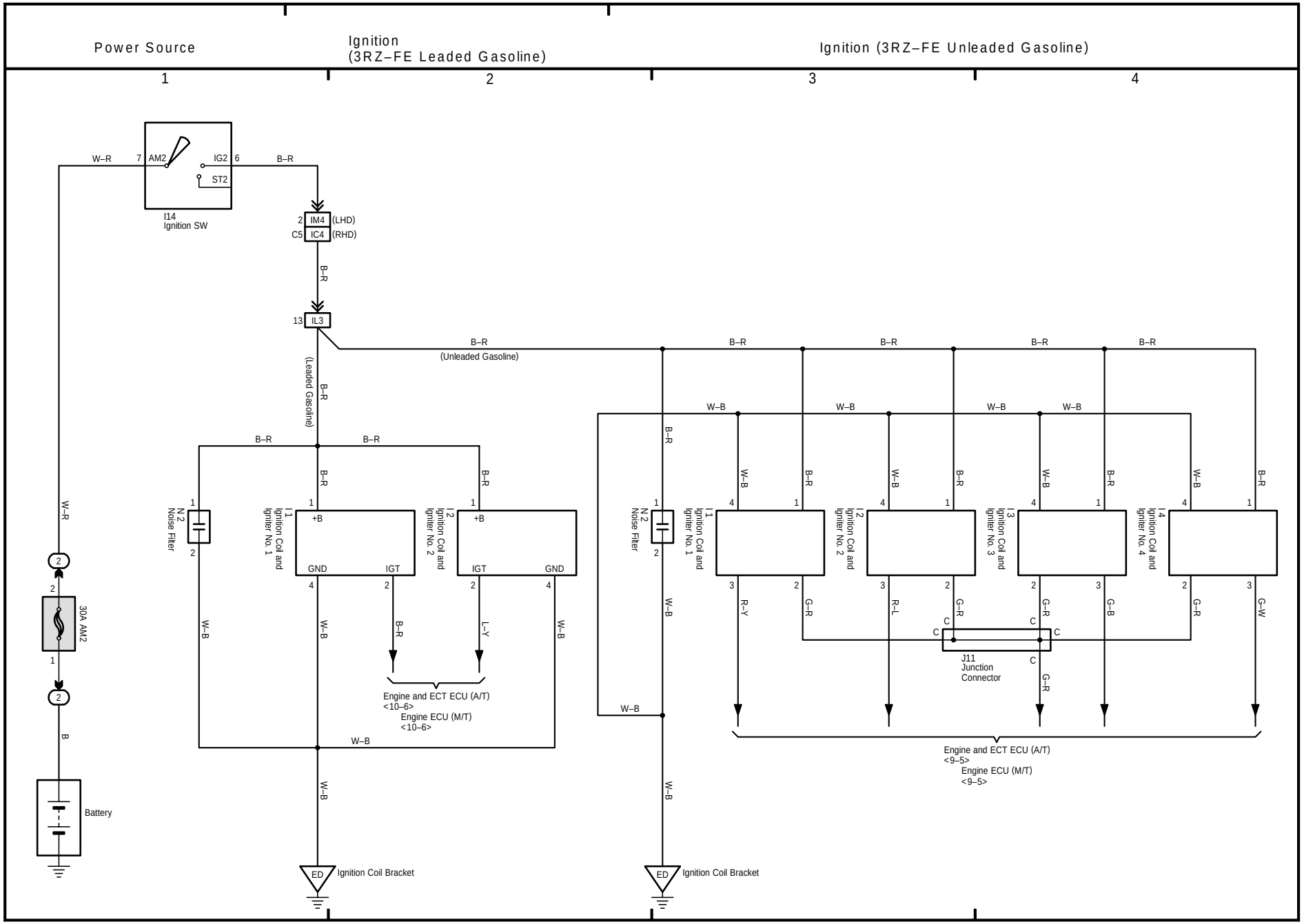

6 LAND CRUISER / LAND CRUISER PRADO

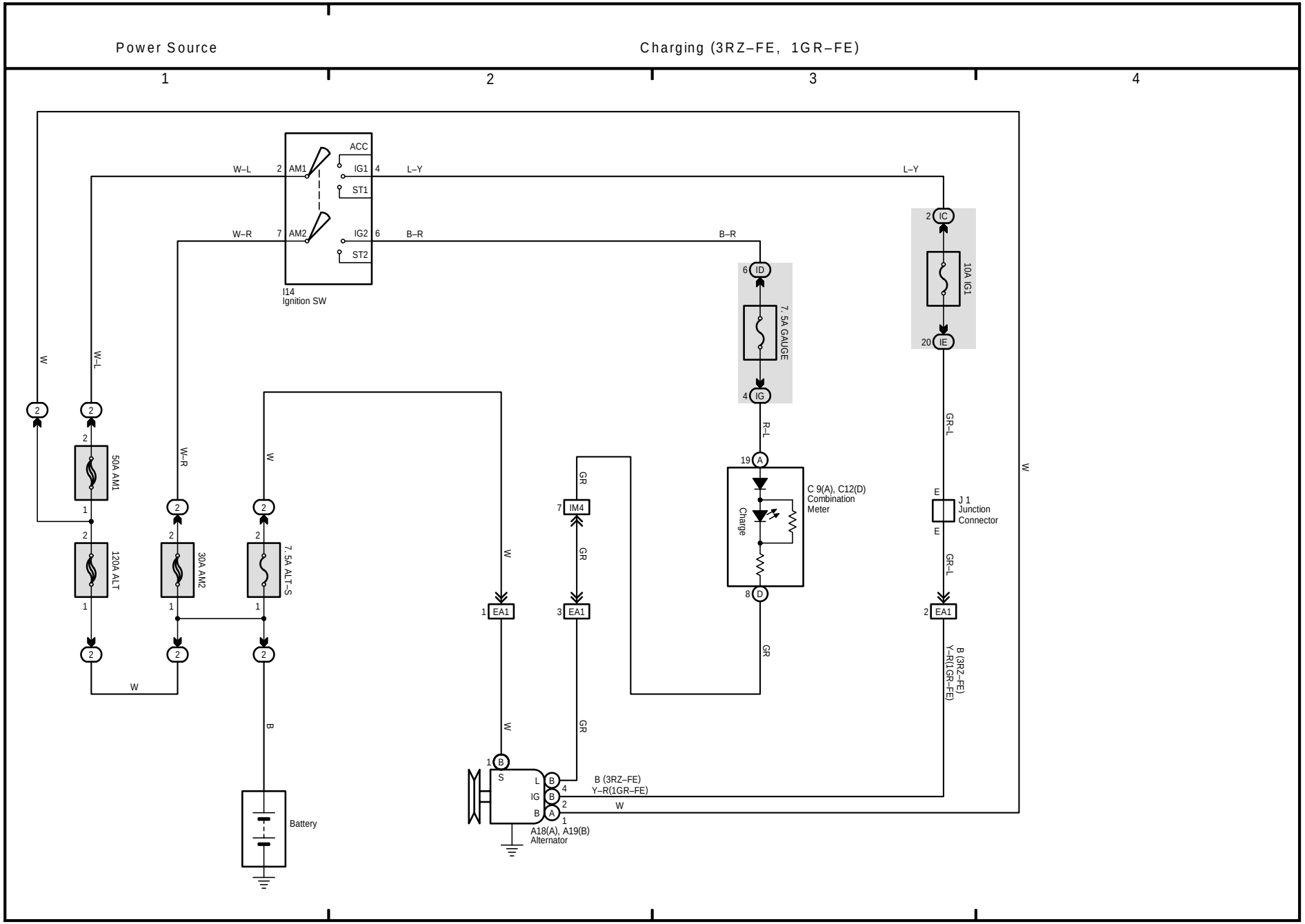

7 LAND CRUISER / LAND CRUISER PRADO

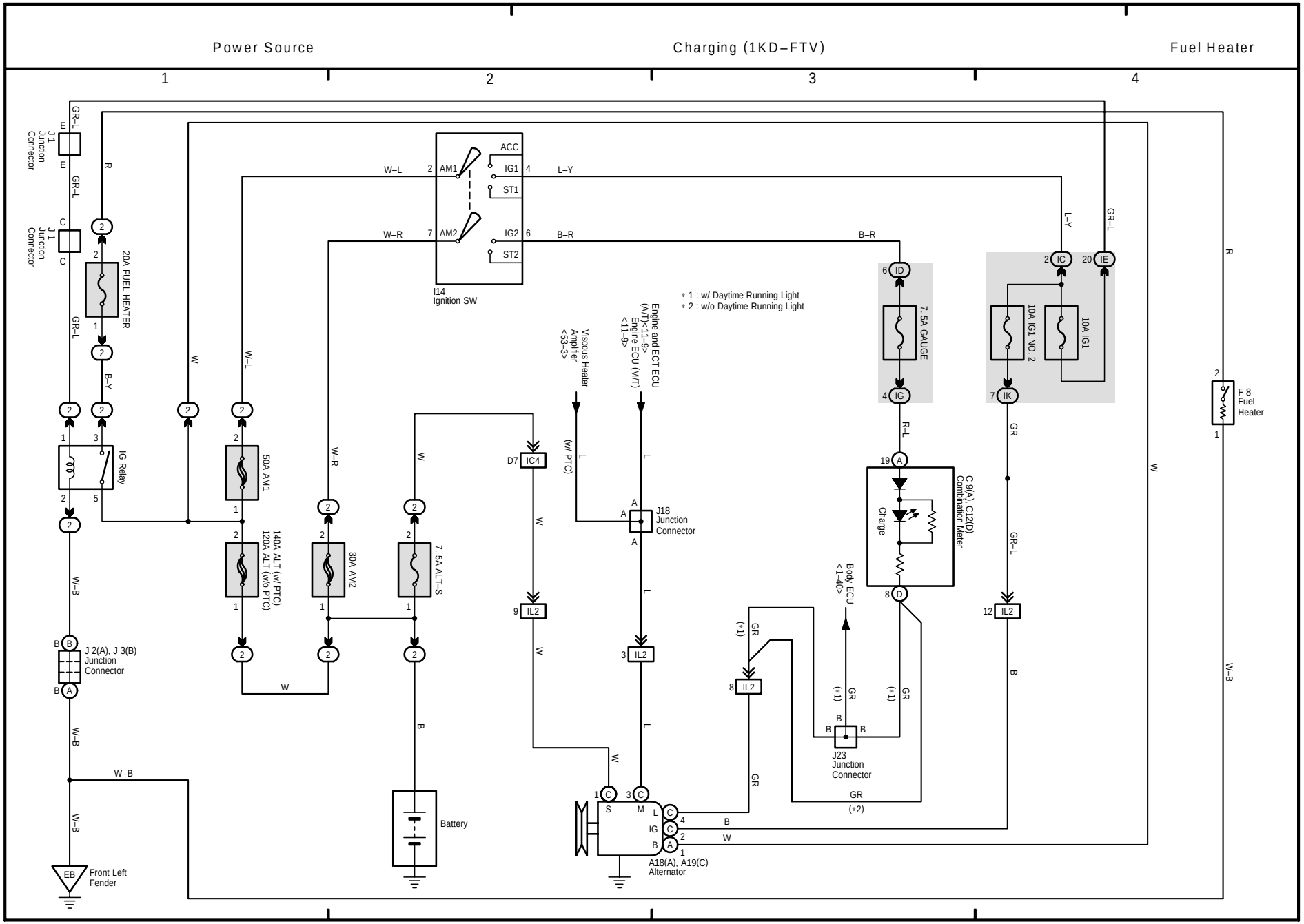

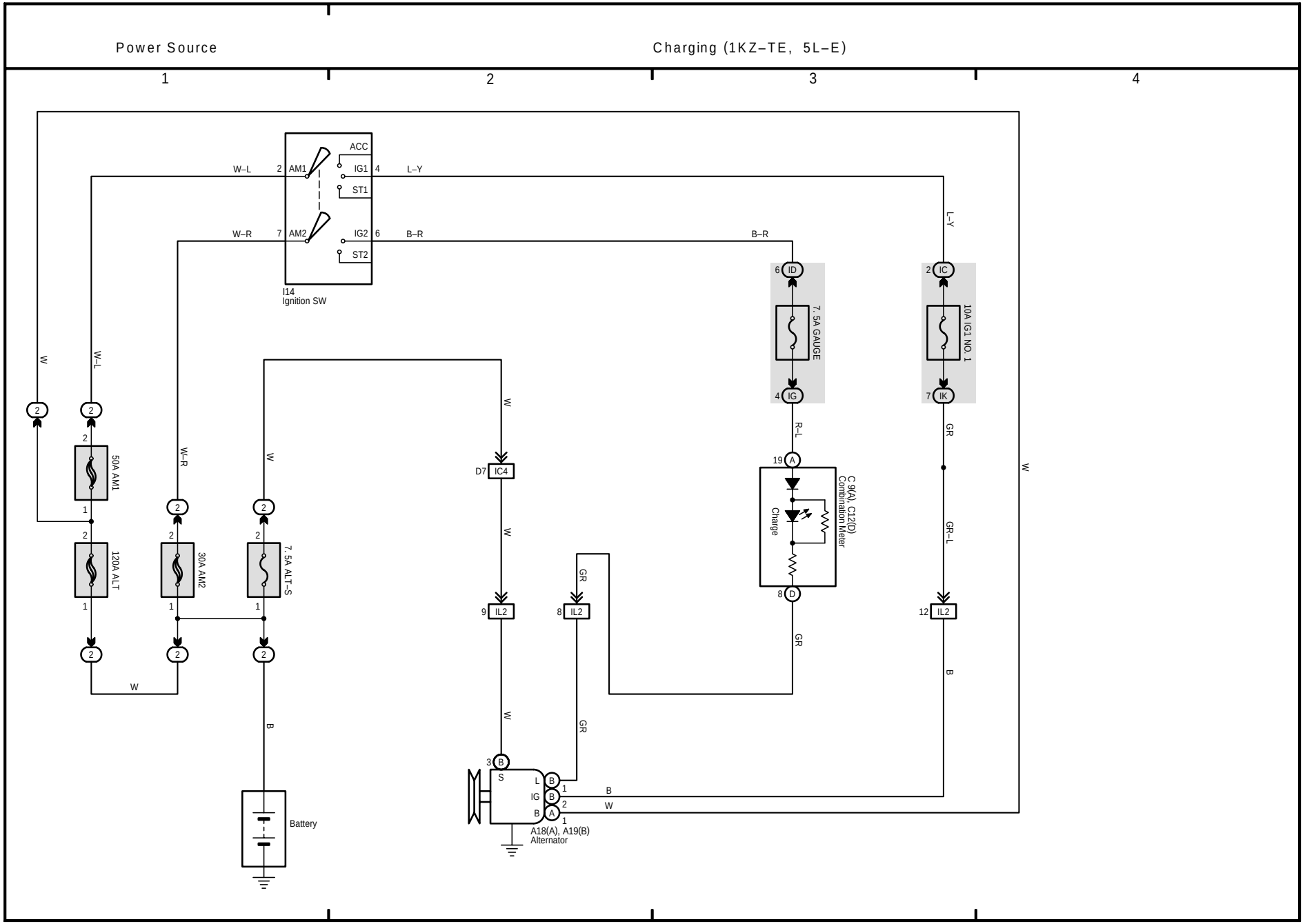
Power Source
Charging (1KZ–TE, 5L–E)
1
2
3
4
ACC
IG1
ST1
AM1
AM2
IG2
ST2
W–L
W–R
L–Y
B–R
I14
Ignition SW
W
50A AM1
120A ALT
30A AM2
7. 5A ALT–S
Battery
D7 IC4
9 IL2
8 IL2
12 IL2
GR
B
6 ID
4 IG
7. 5A GAUGE
2 IC
7 IK
10A IG1 NO. 1
R–L
GR–L
19 A
8 D
Charge
C 9(A), C12(D)
Combination Meter
3 B
S
L
IG
B
A
A18(A), A19(B)
Alternator

9 LAND CRUISER / LAND CRUISER PRADO

(Cont. next page)

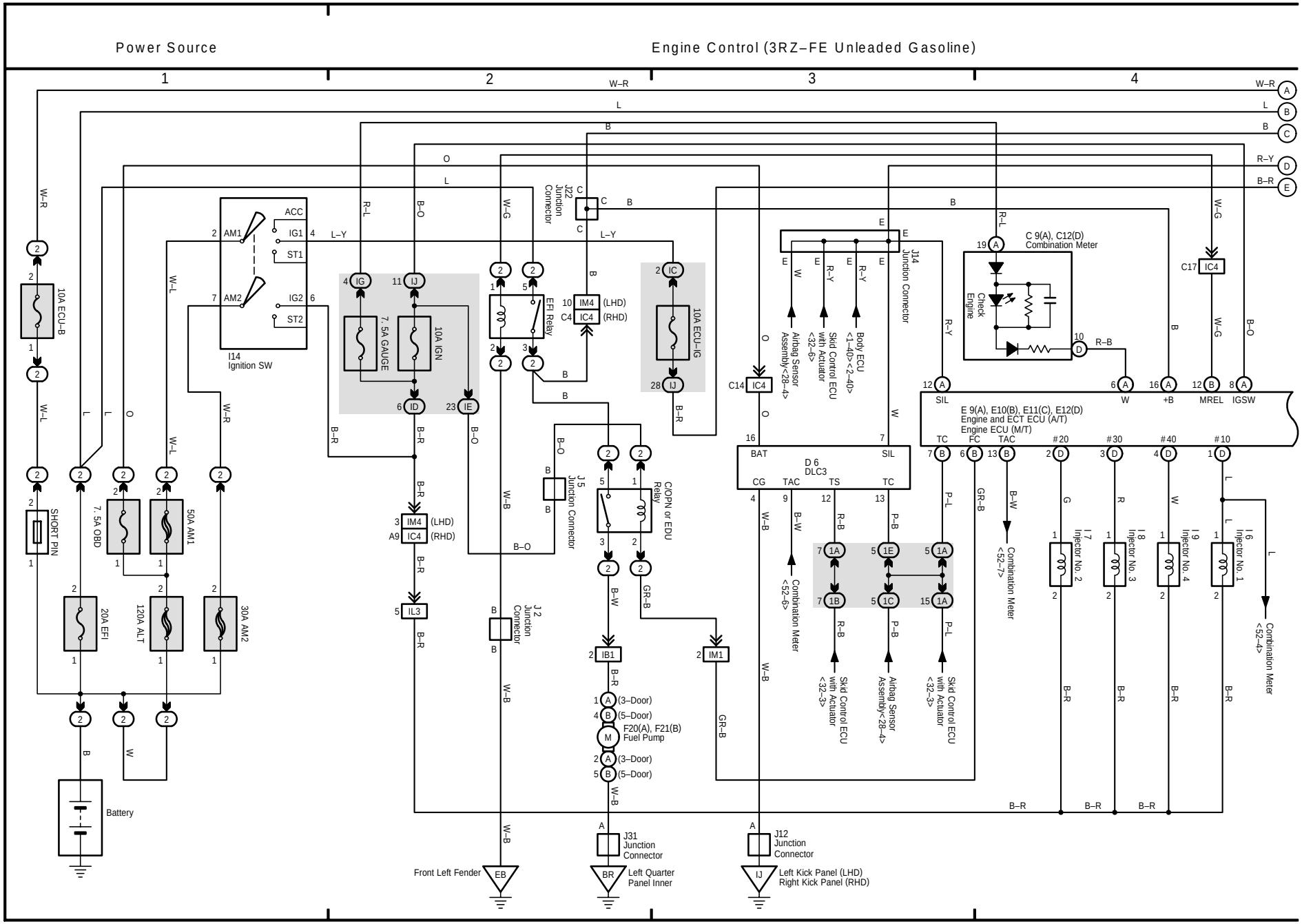

(Cont. next page)

Engine Control (3RZ–FE Unleaded Gasoline)

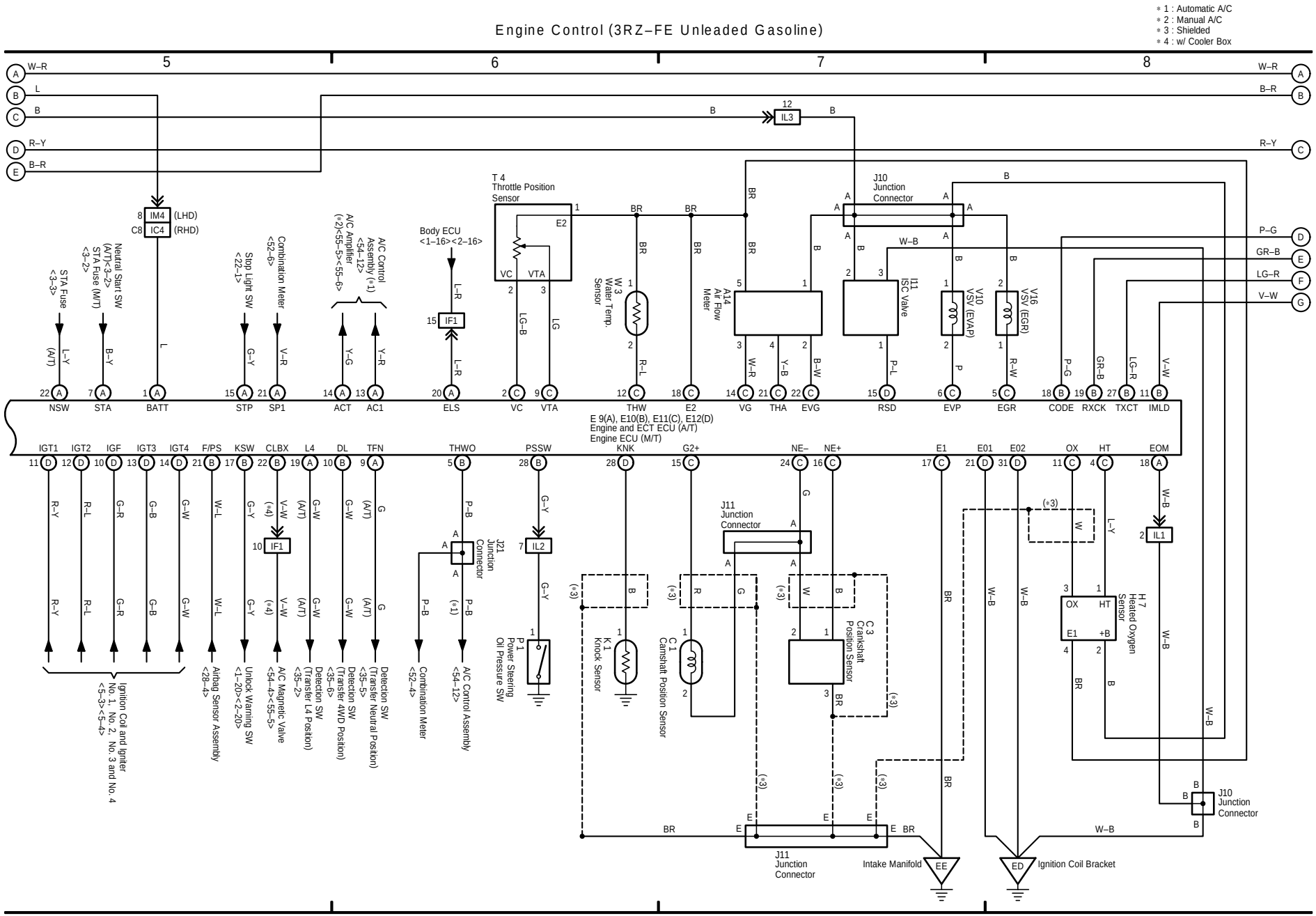

9 LAND CRUISER / LAND CRUISER PRADO (Cont' d)

Engine Immobiliser System (3RZ–FE Unleaded Gasoline)

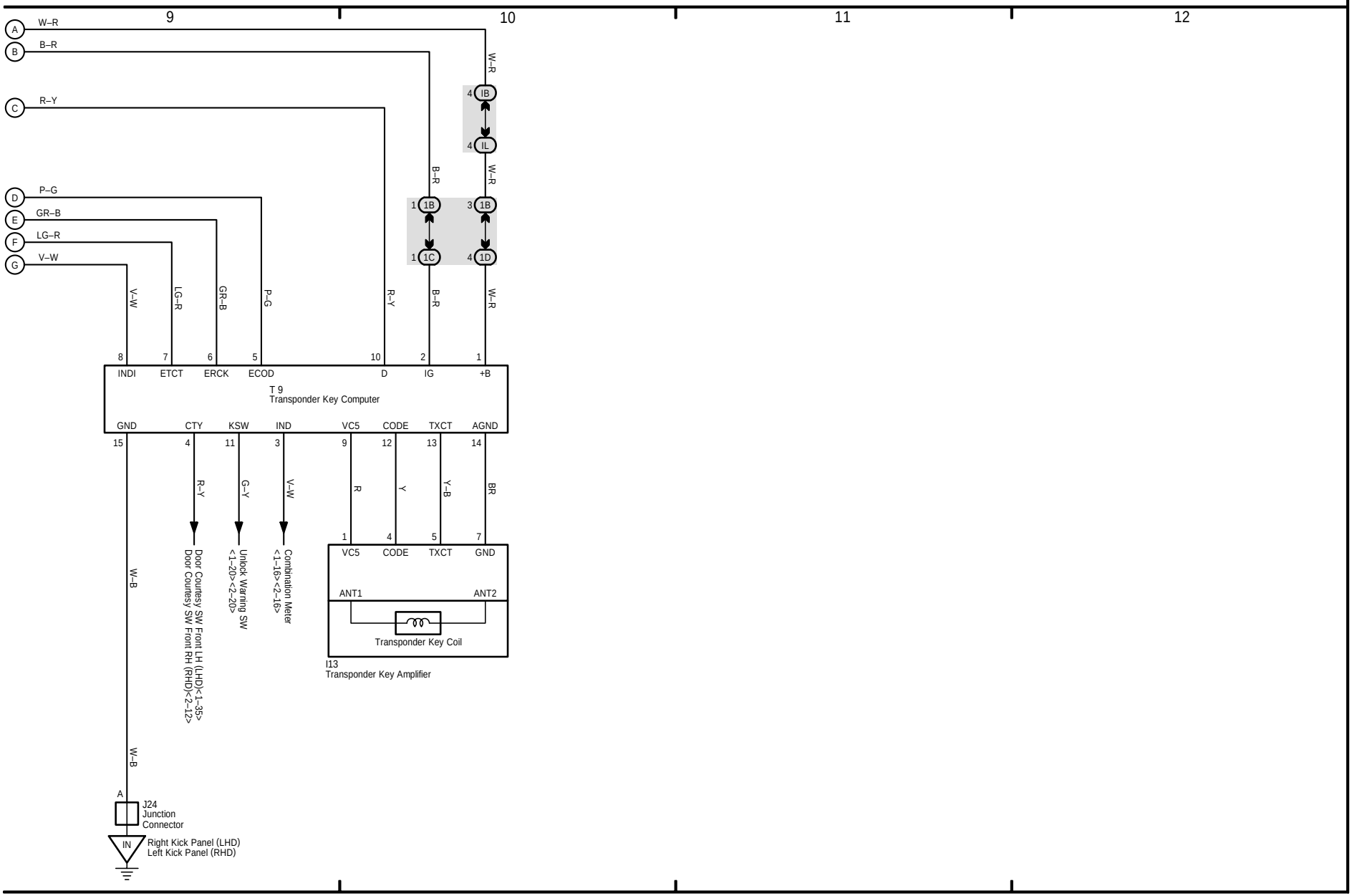

10 LAND CRUISER / LAND CRUISER PRADO

(Cont. next page)

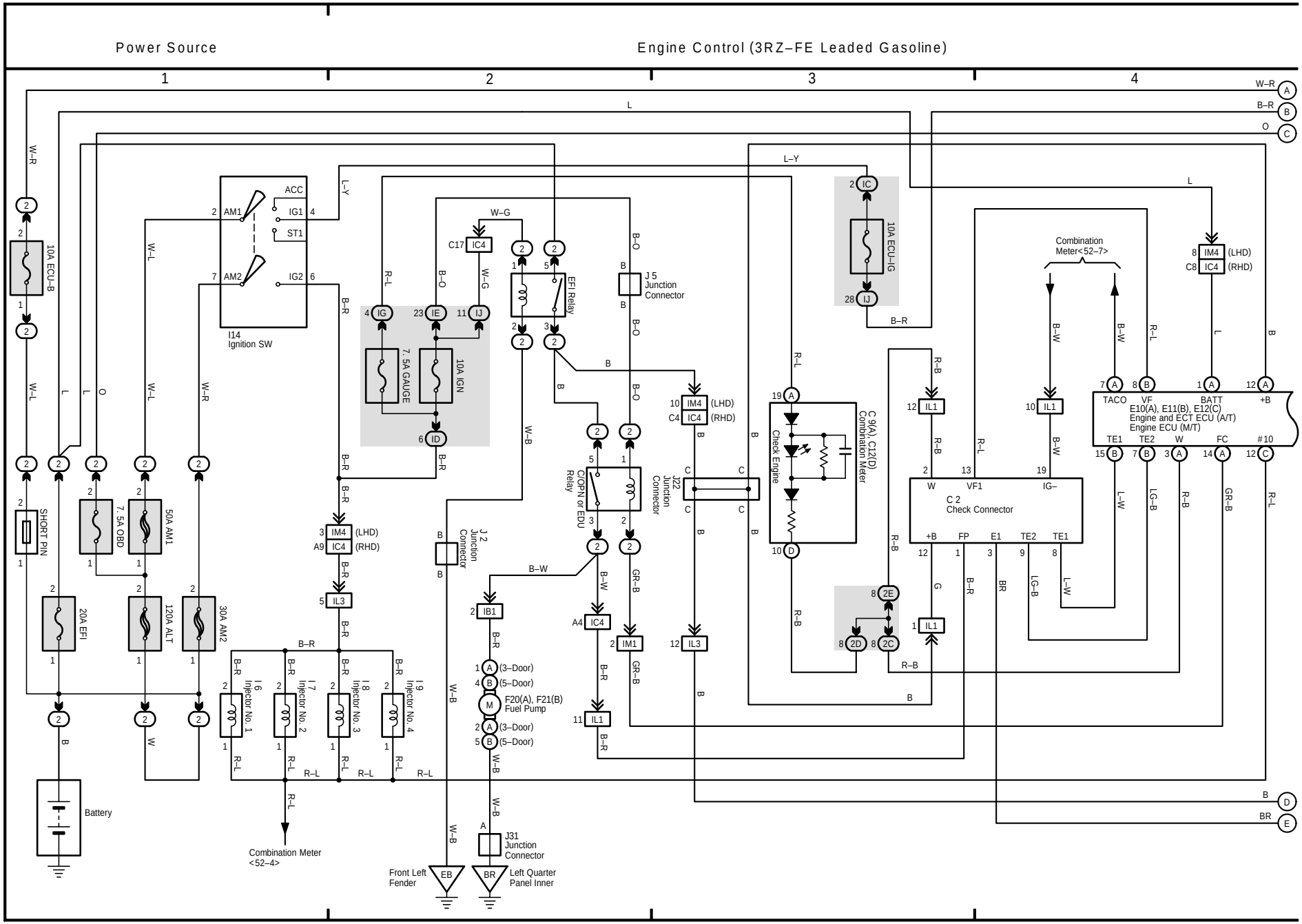

10 LAND CRUISER / LAND CRUISER PRADO (Cont' d)

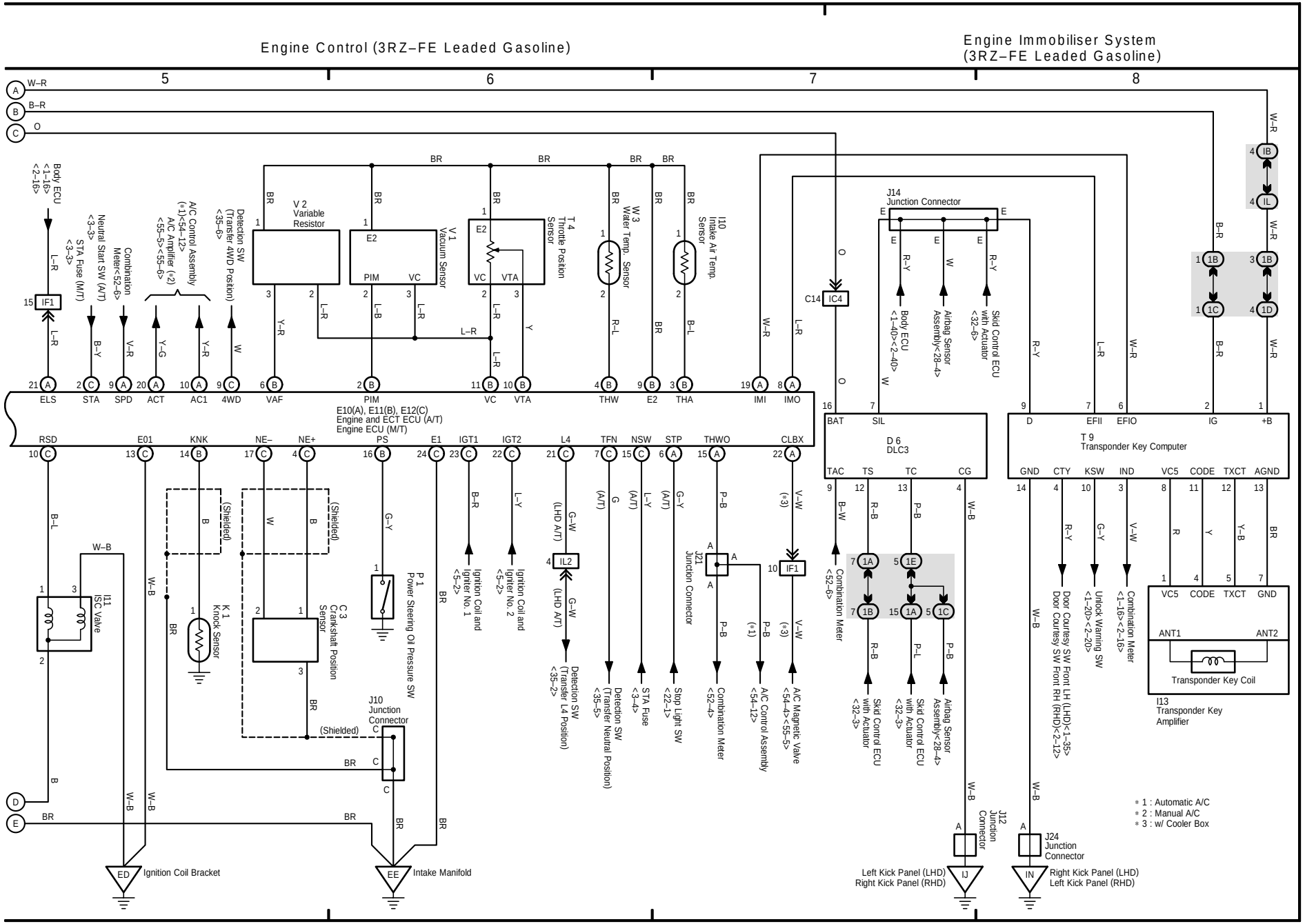

11 LAND CRUISER / LAND CRUISER PRADO

(Cont. next page)

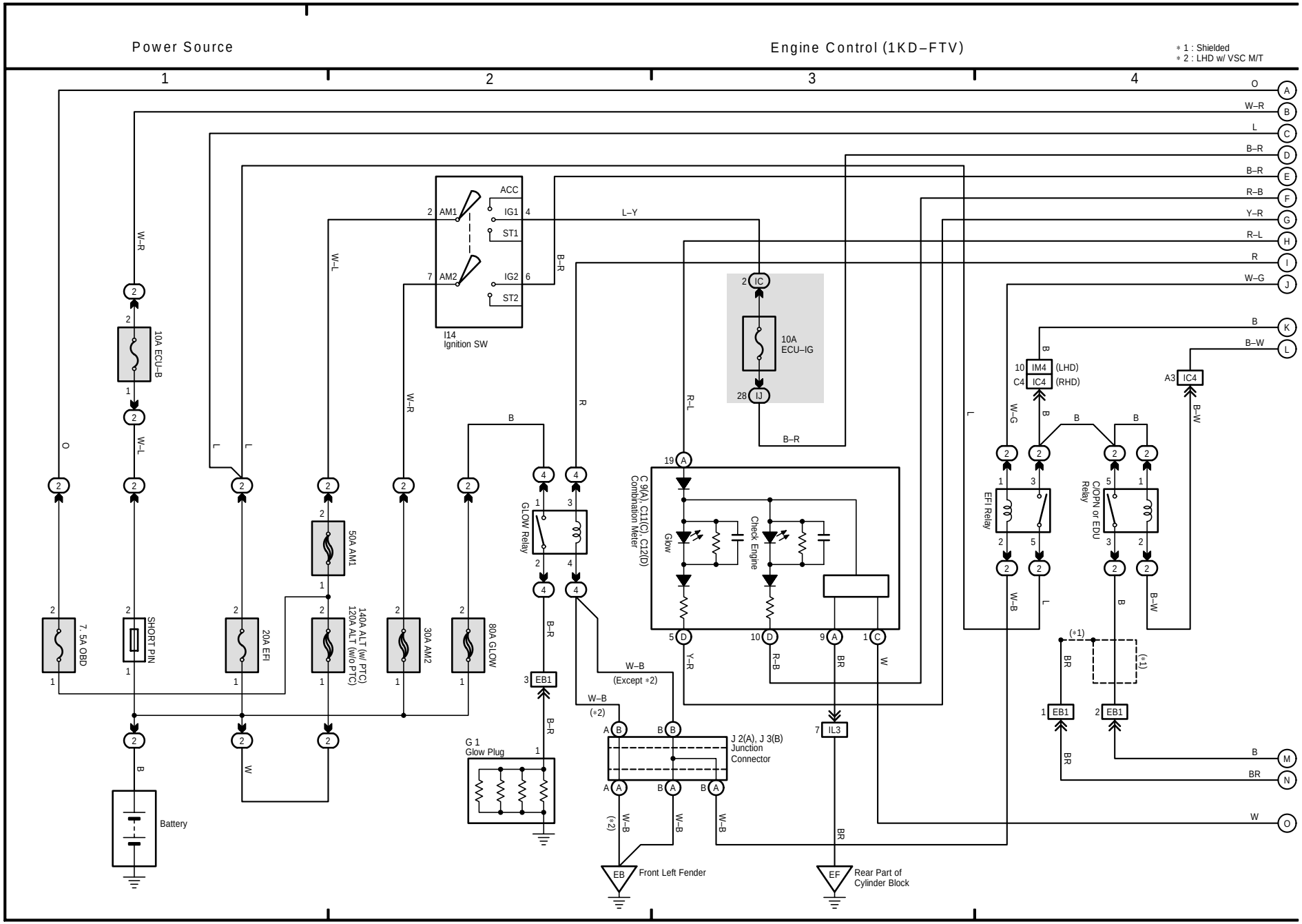

(Cont. next page)

Engine Control (1KD–FTV)

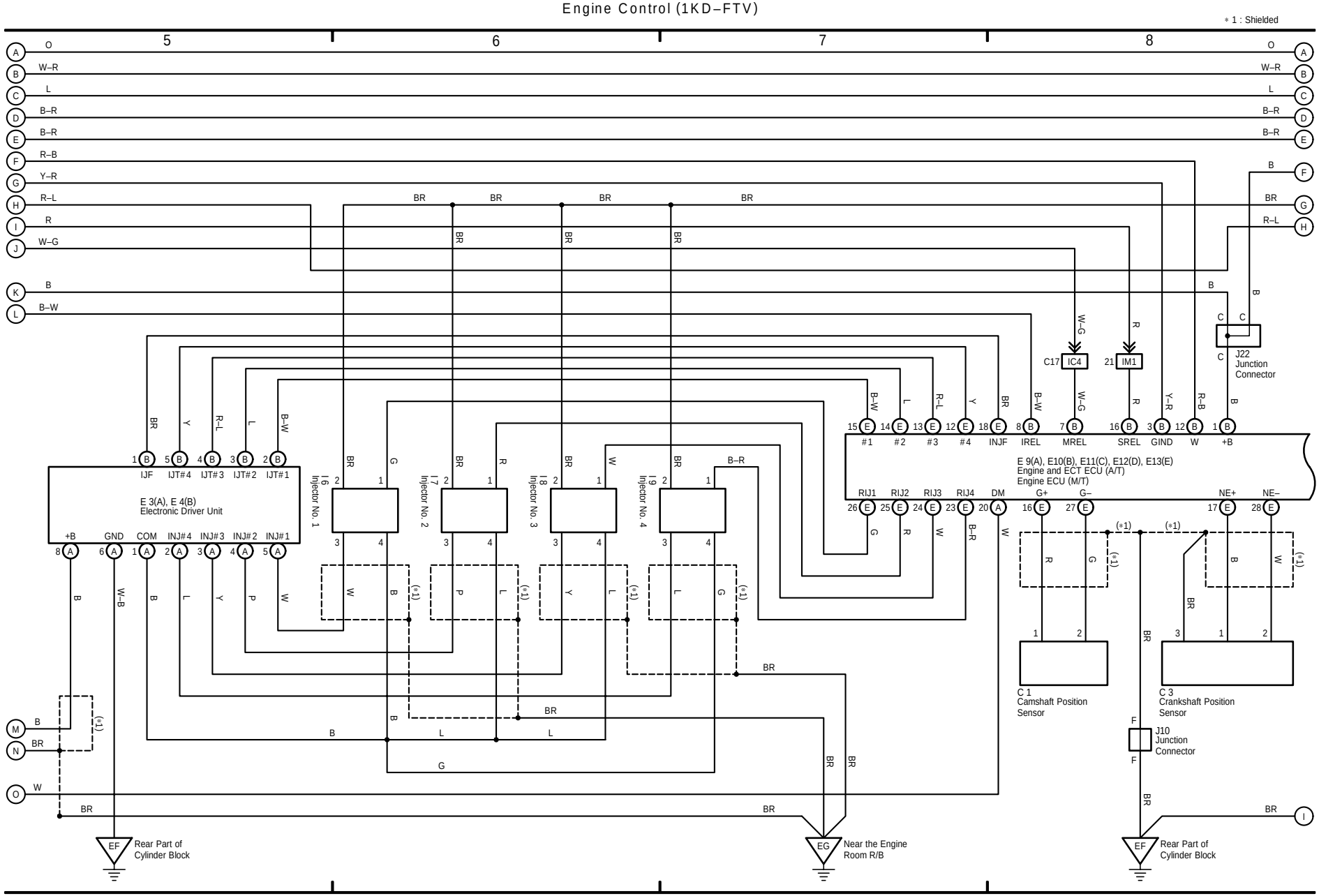

11 LAND CRUISER / LAND CRUISER PRADO (Cont' d)

(Cont. next page)

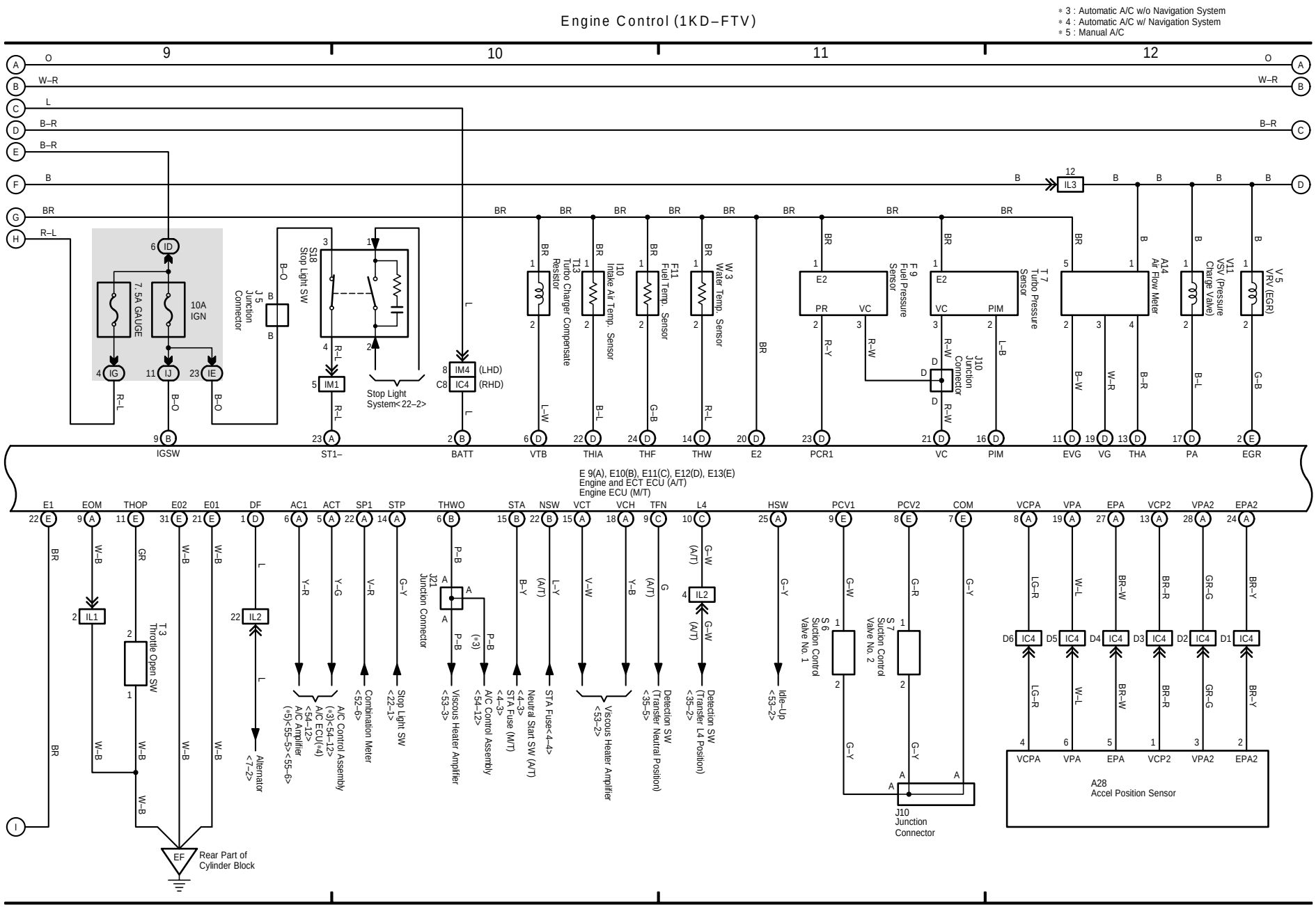

11 LAND CRUISER / LAND CRUISER PRADO (Cont' d)

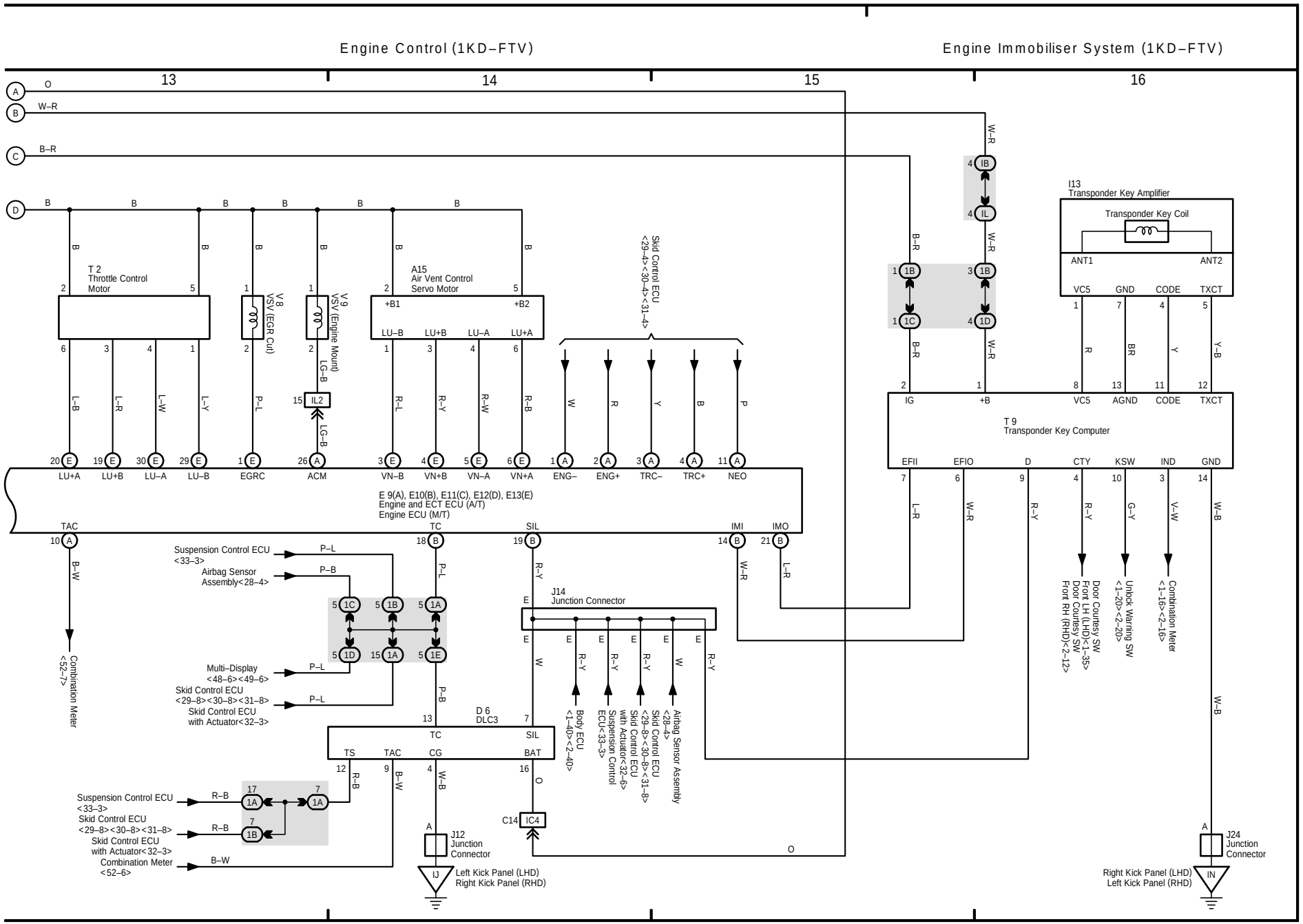

(Cont. next page)

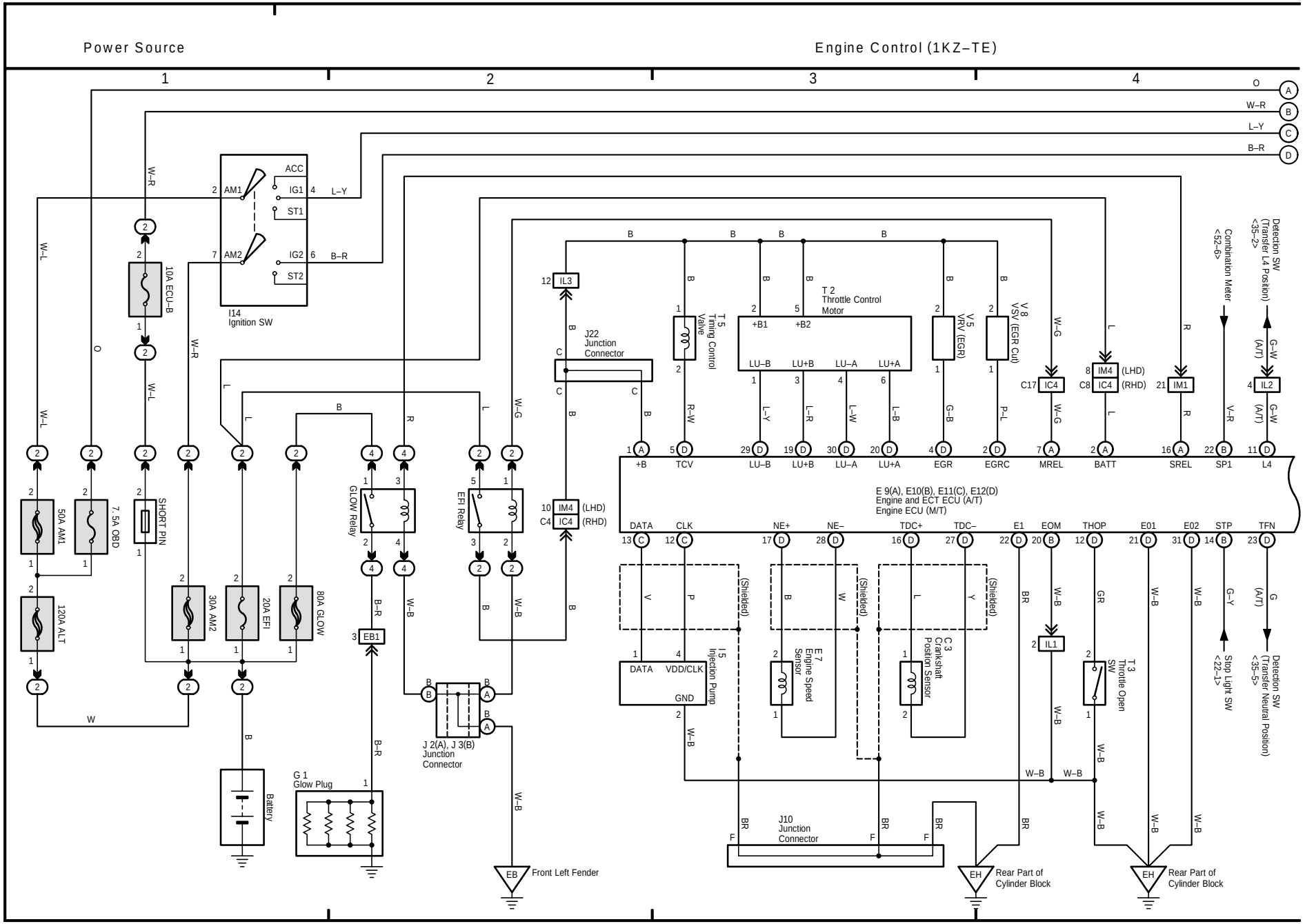

12 LAND CRUISER / LAND CRUISER PRADO (Cont' d)

(Cont. next page)

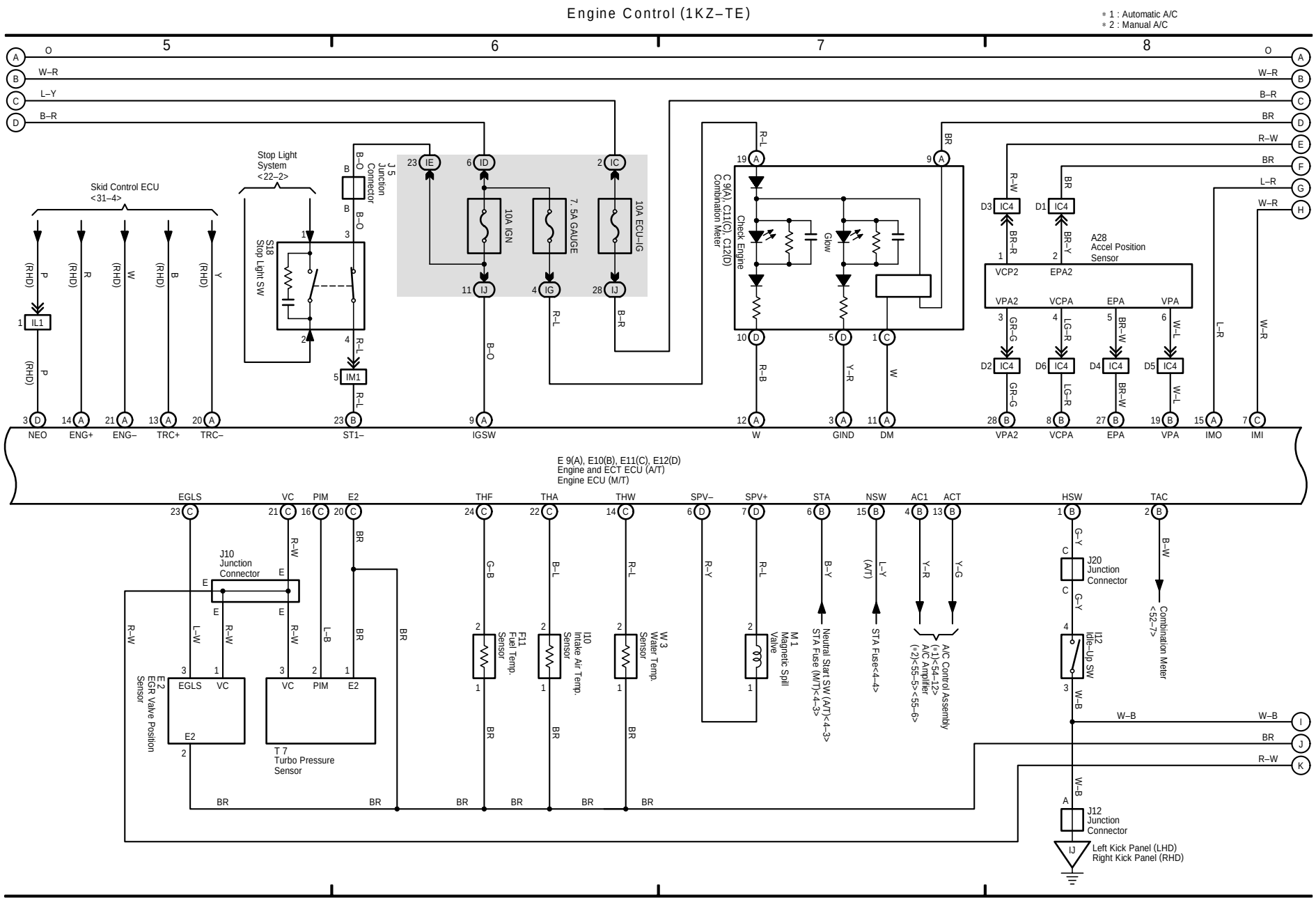

12 LAND CRUISER / LAND CRUISER PRADO (Cont' d)

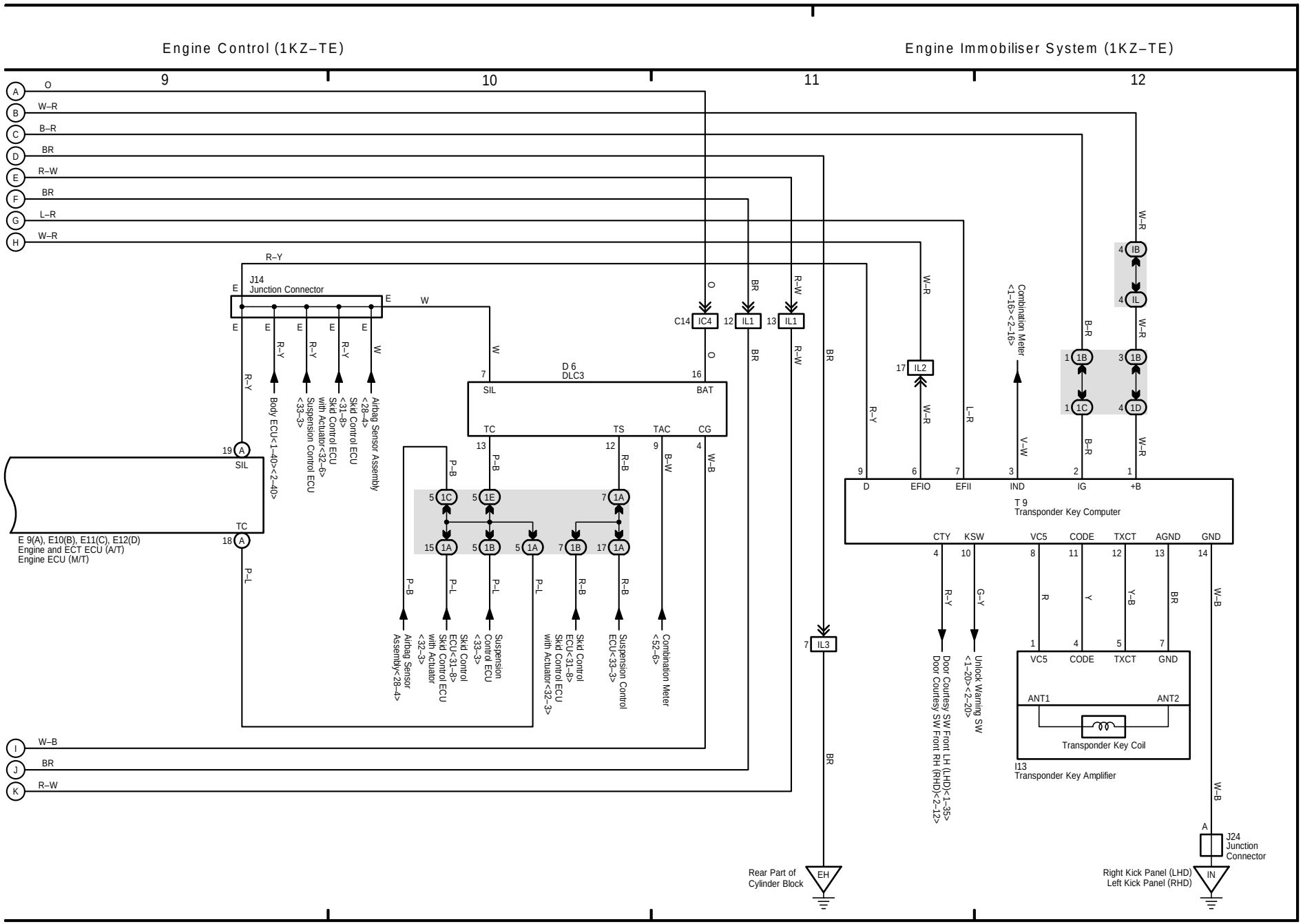

13 LAND CRUISER / LAND CRUISER PRADO

(Cont. next page)

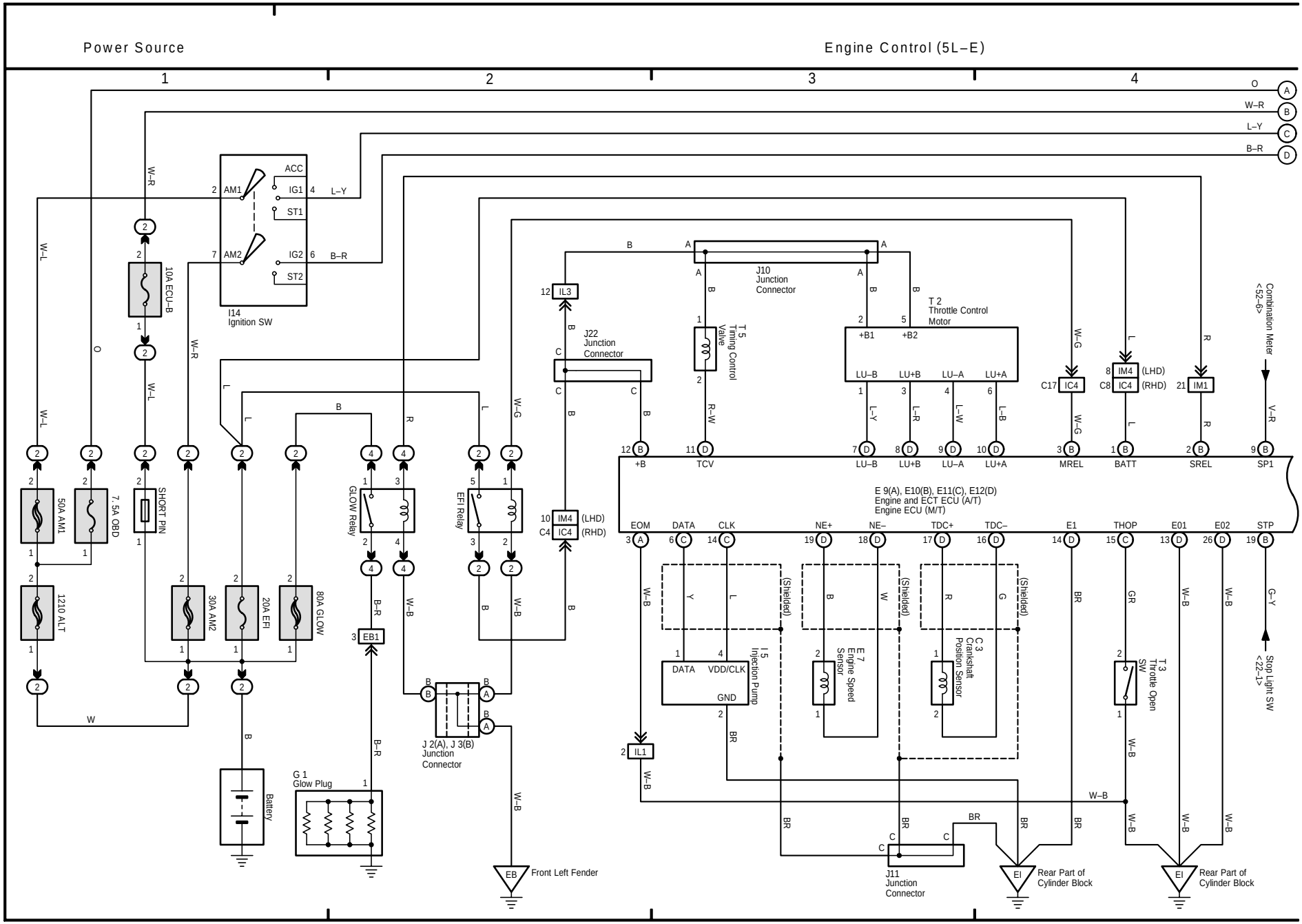

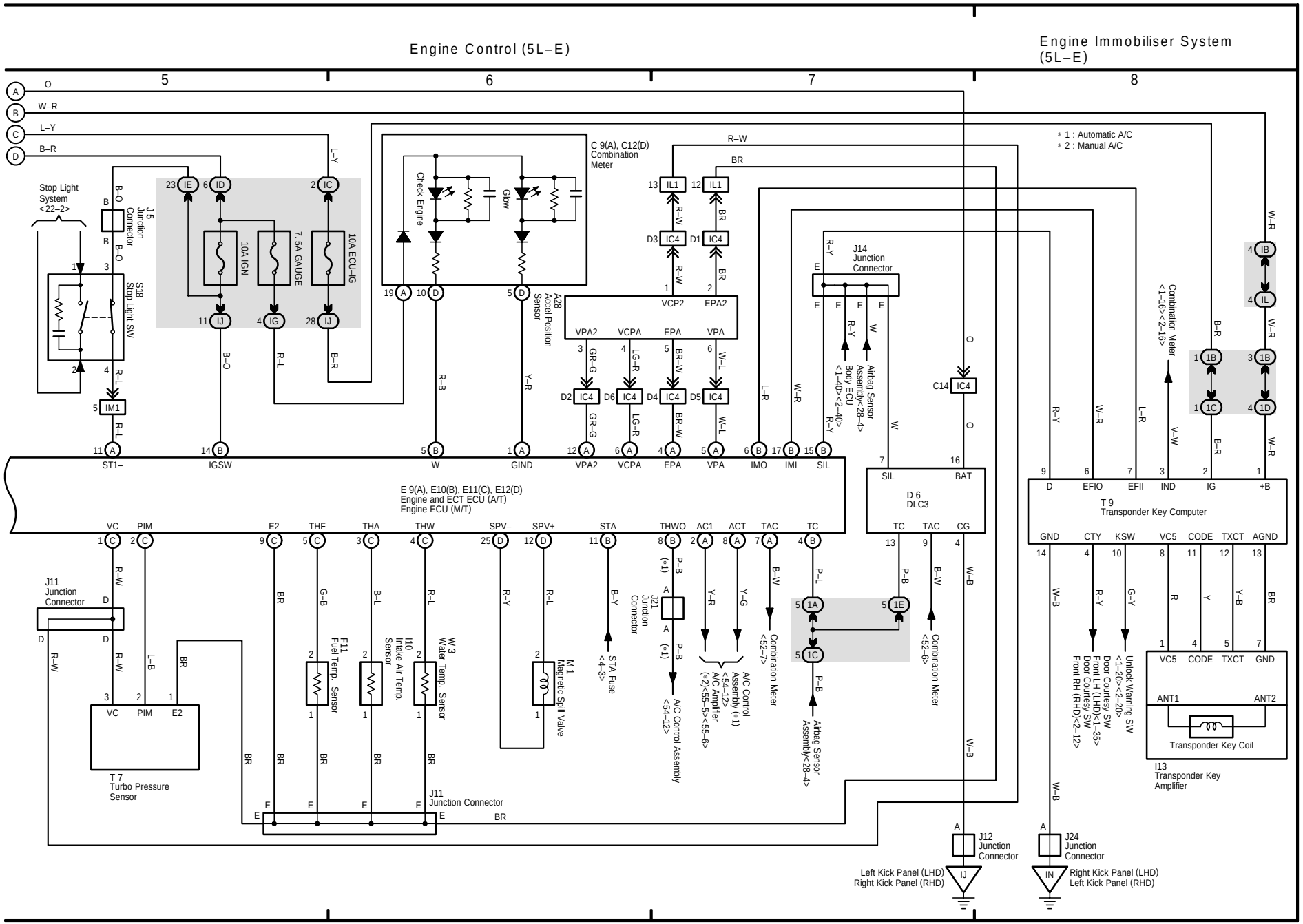
Engine Control (5L–E)
Engine Immobiliser System (5L–E)
5
6
7
8
* 1 : Automatic A/C
* 2 : Manual A/C
Stop Light System <22–2>
J 5 Junction Connector
S18 Stop Light SW
10A IGN
7. 5A GAUGE
10A ECU–IG
Check Engine
Glow
C 9(A), C12(D) Combination Meter
A28 Accel Position Sensor
J14 Junction Connector
Body ECU <1–40><2–40>
Airbag Sensor Assembly<28–4>
Combination Meter <1–16><2–16>
E 9(A), E10(B), E11(C), E12(D) Engine and ECT ECU (A/T) Engine ECU (M/T)
D 6 DLC3
T 9 Transponder Key Computer
J11 Junction Connector
T 7 Turbo Pressure Sensor
F11 Fuel Temp. Sensor
I10 Intake Air Temp. Sensor
W 3 Water Temp. Sensor
M 1 Magnetic Spill Valve
STA Fuse <4–3>
J21 Junction Connector
A/C Control Assembly <54–12>
A/C Amplifier <54–12> (*2)<55–5><55–6>
A/C Control Assembly (*1)
Combination Meter <52–7>
Combination Meter <52–6>
Airbag Sensor Assembly<28–4>
Unlock Warning SW <1–20><2–20>
Door Courtesy SW Front LH (LHD)<1–35>
Door Courtesy SW Front RH (RHD)<2–12>
Transponder Key Coil
I13 Transponder Key Amplifier
J12 Junction Connector
J24 Junction Connector
Left Kick Panel (LHD) Right Kick Panel (RHD)
Right Kick Panel (LHD) Left Kick Panel (RHD)

14 LAND CRUISER / LAND CRUISER PRADO

(Cont. next page)

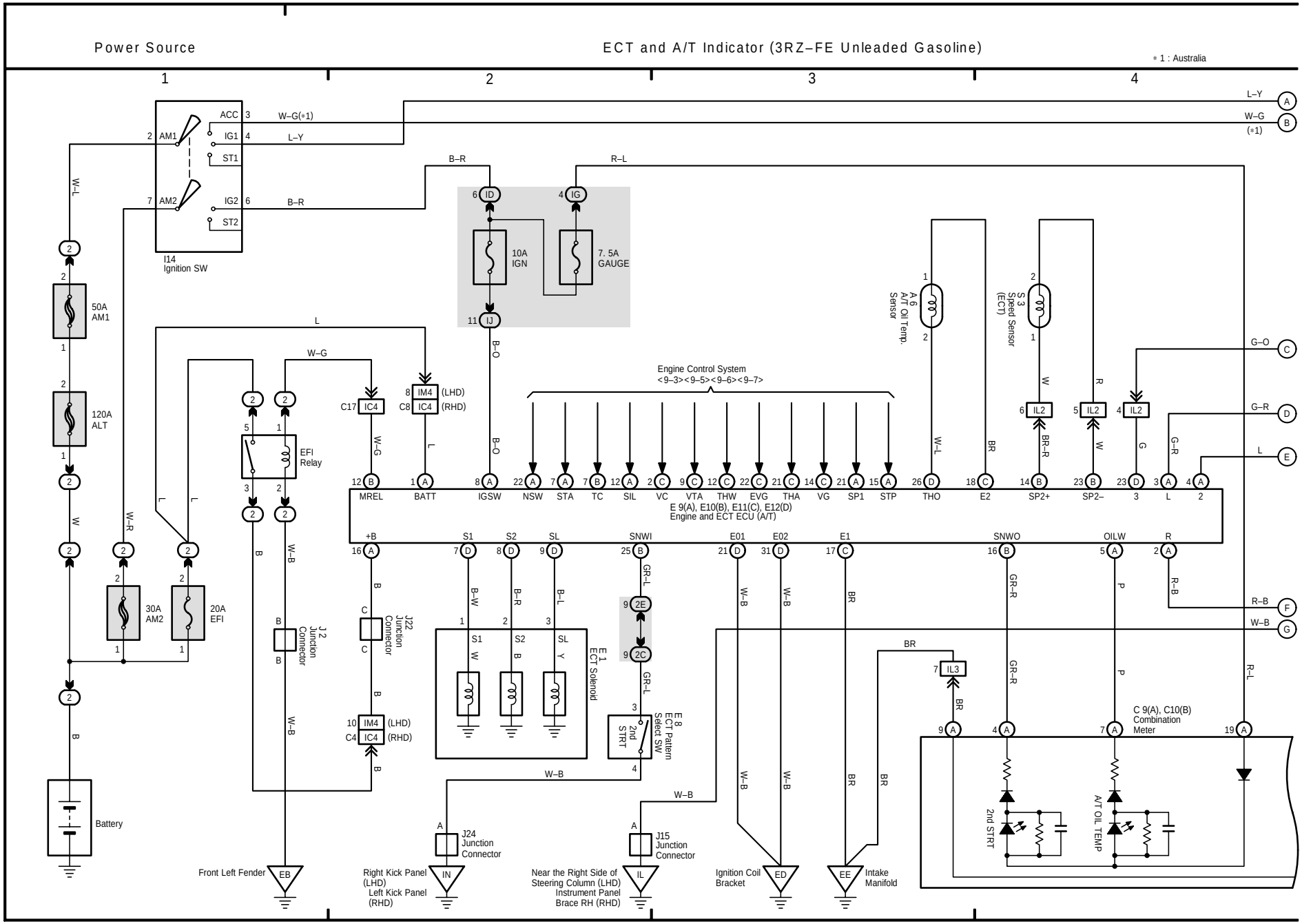

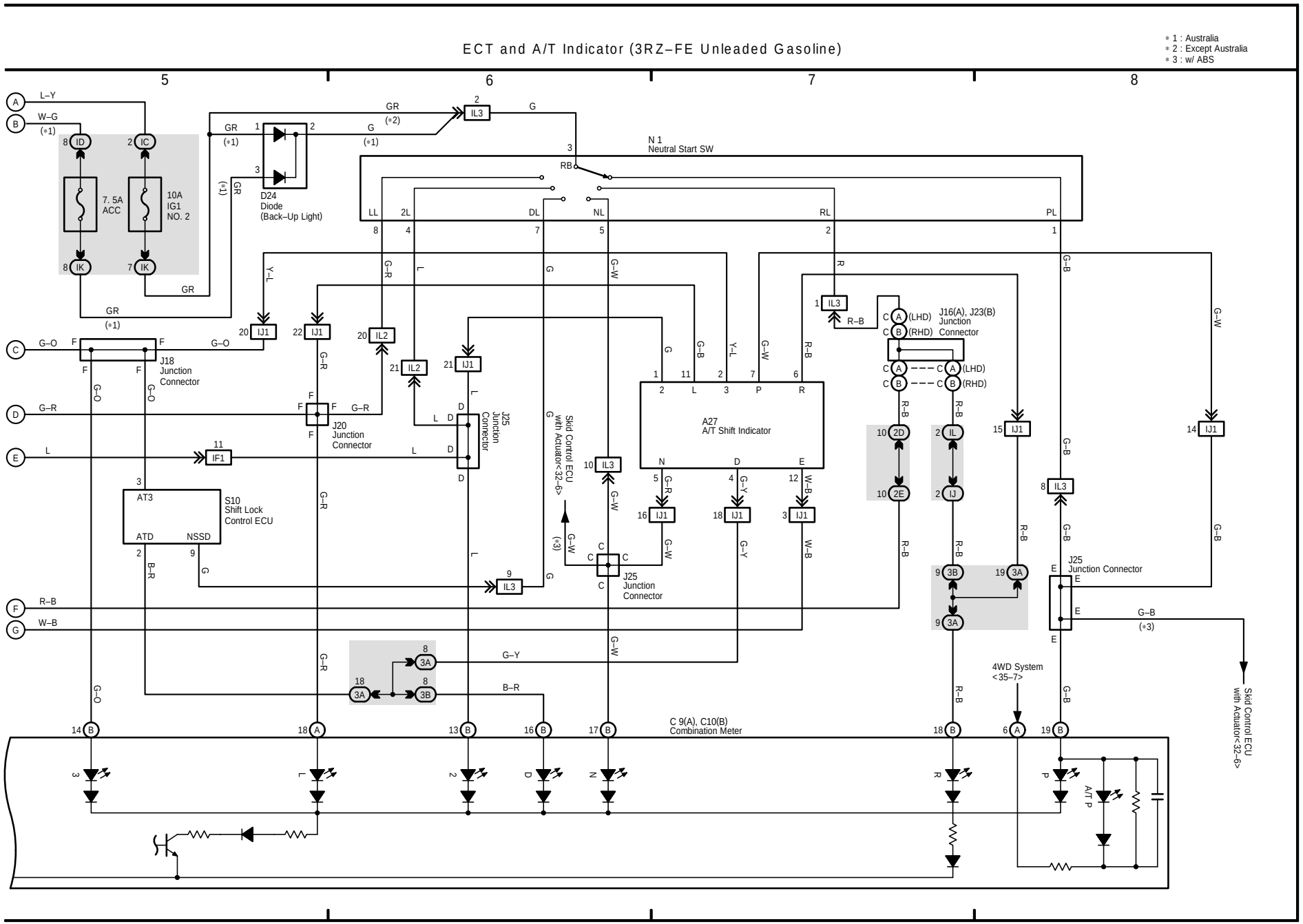
ECT and A/T Indicator (3RZ–FE Unleaded Gasoline)
* 1 : Australia
* 2 : Except Australia
* 3 : w/ ABS
7. 5A ACC
10A IG1 NO. 2
D24 Diode (Back–Up Light)
N 1 Neutral Start SW
J18 Junction Connector
J20 Junction Connector
J25 Junction Connector
S10 Shift Lock Control ECU
A27 A/T Shift Indicator
J16(A), J23(B) Junction Connector
Skid Control ECU with Actuator<32–6>
4WD System <35–7>
C 9(A), C10(B) Combination Meter
A/T P

15 LAND CRUISER / LAND CRUISER PRADO

(Cont. next page)

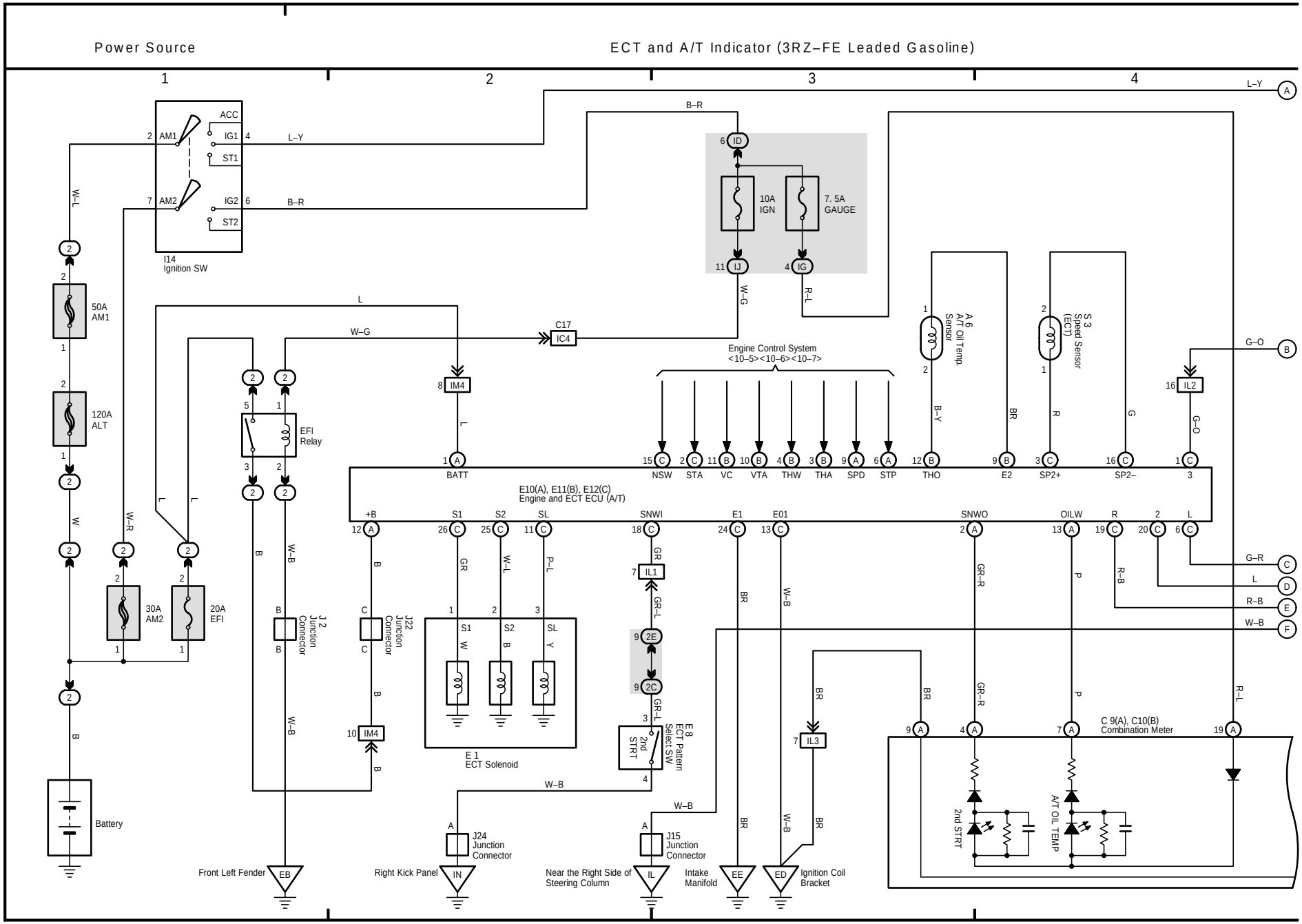

ECT and A/T Indicator (3RZ–FE Leaded Gasoline)

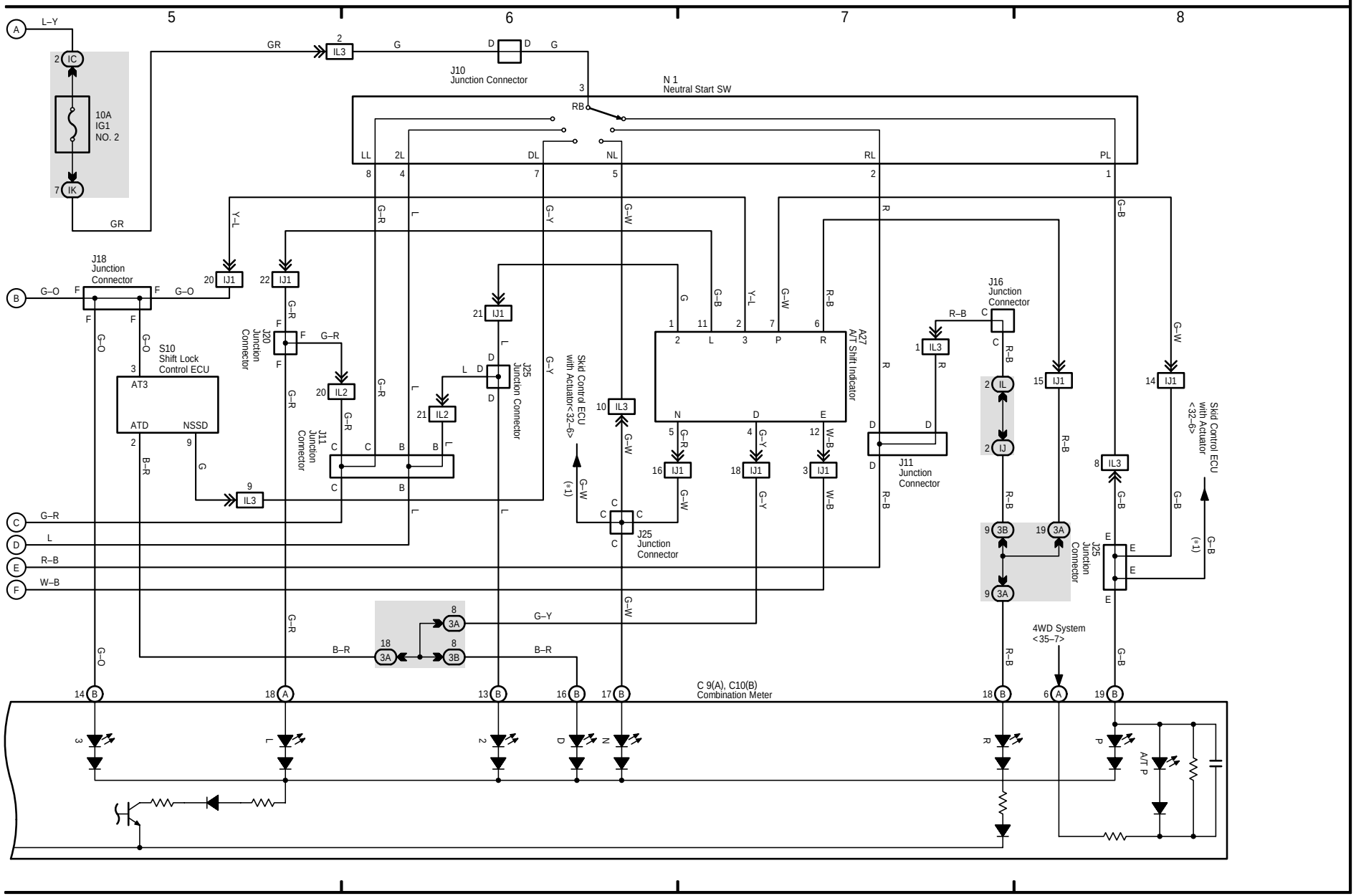

16 LAND CRUISER / LAND CRUISER PRADO

(Cont. next page)

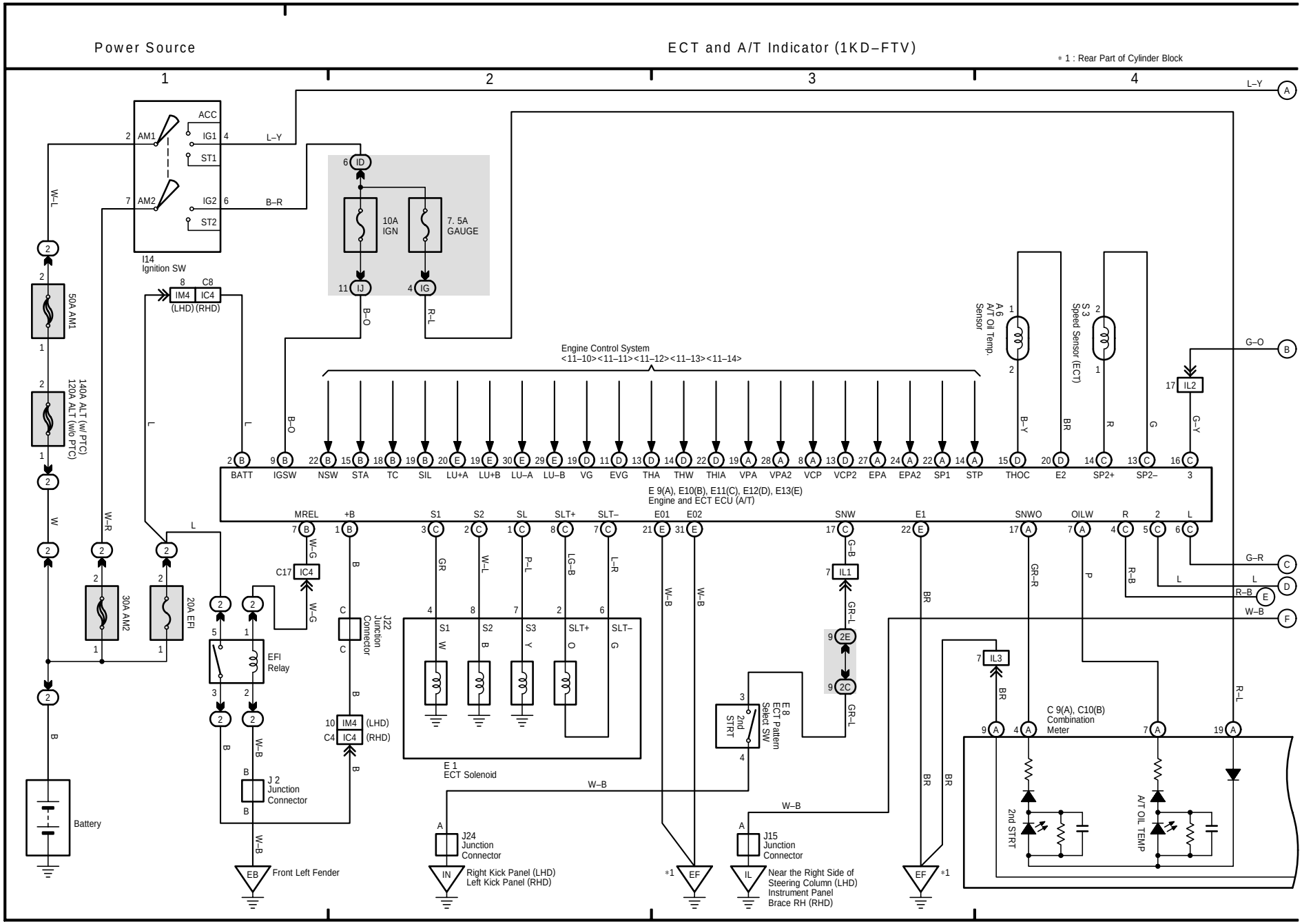

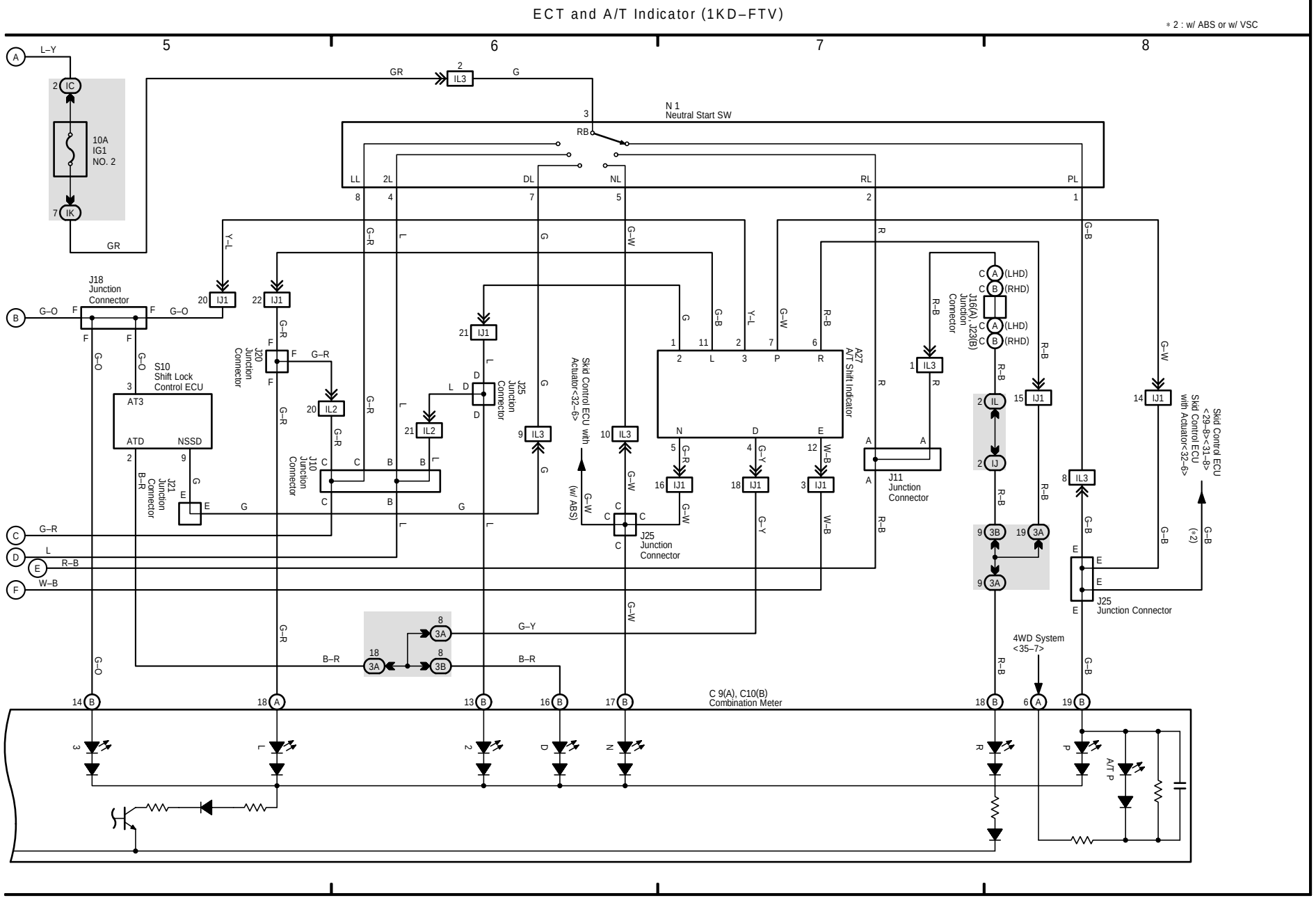
ECT and A/T Indicator (1KD–FTV)
* 2 : w/ ABS or w/ VSC
10A
IG1
NO. 2
N 1
Neutral Start SW
J18
Junction
Connector
S10
Shift Lock
Control ECU
J20
Junction
Connector
J10
Junction
Connector
J21
Junction
Connector
J25
Junction
Connector
Skid Control ECU with
Actuator<32–6>
A27
A/T Shift Indicator
J11
Junction
Connector
J16(A), J23(B)
Junction
Connector
Skid Control ECU
<29–8><31–8>
Skid Control ECU
with Actuator<32–6>
4WD System
<35–7>
C 9(A), C10(B)
Combination Meter

17 LAND CRUISER / LAND CRUISER PRADO

(Cont. next page)

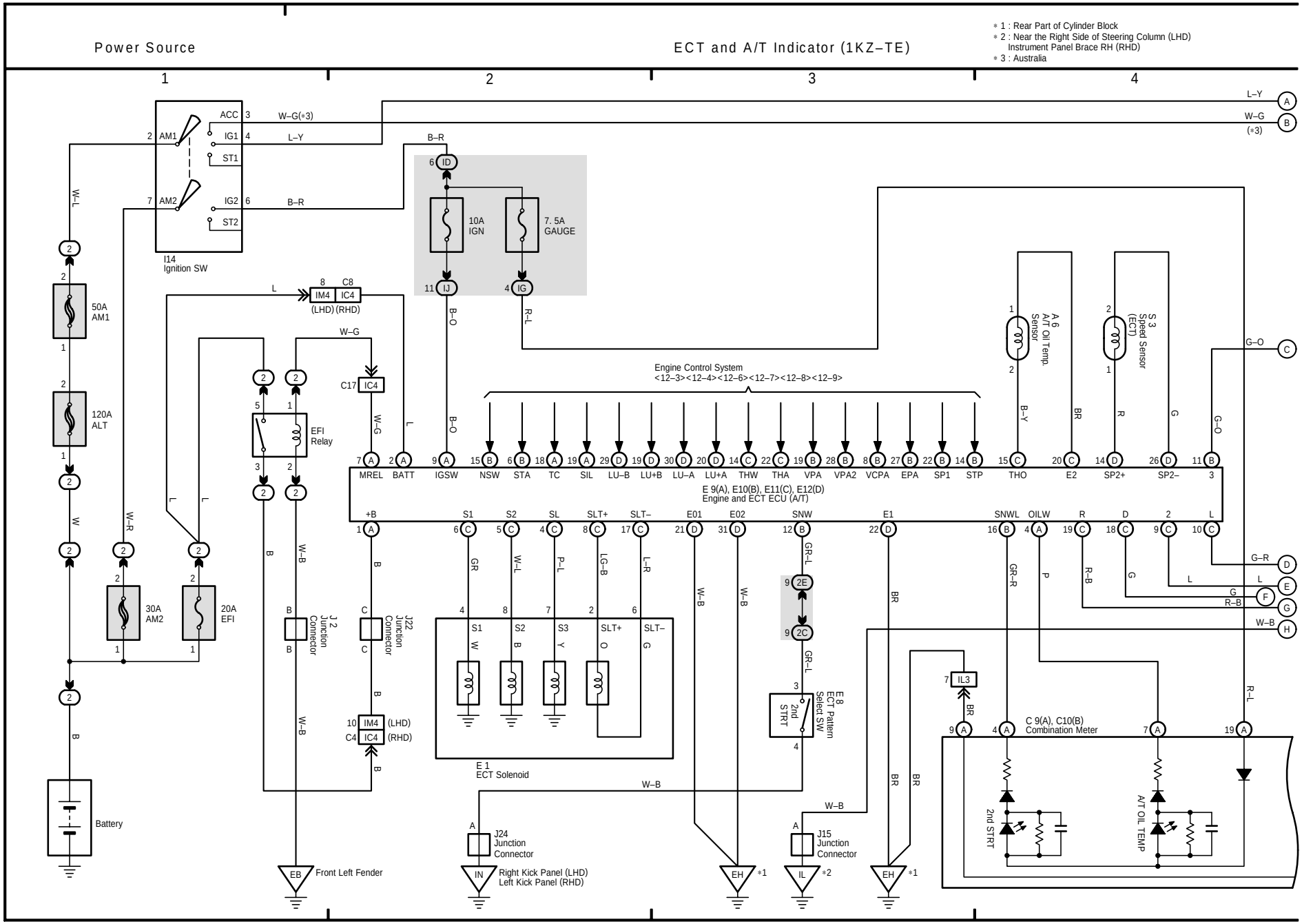

ECT and A/T Indicator (1KZ–TE)

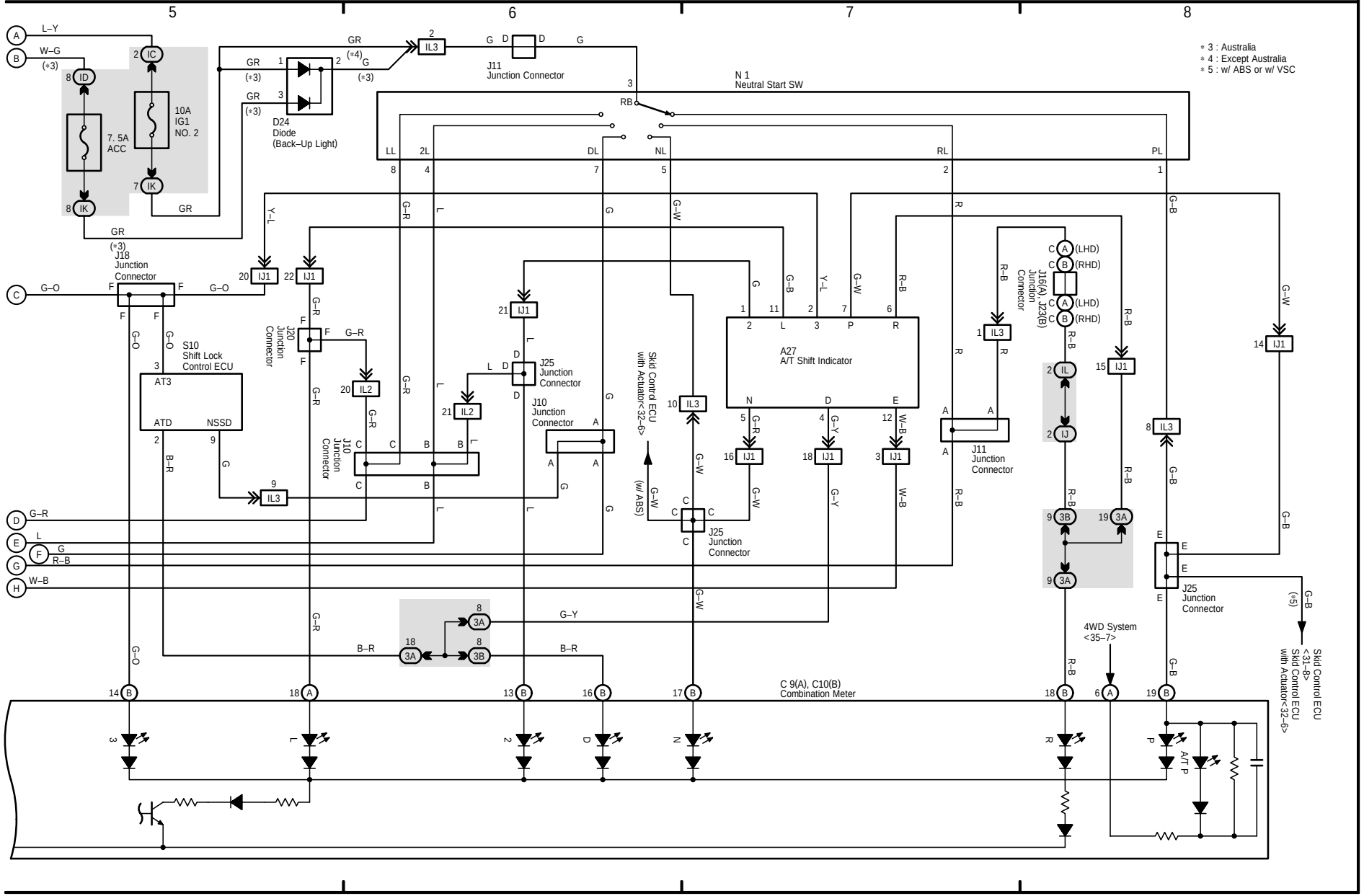

18 LAND CRUISER / LAND CRUISER PRADO

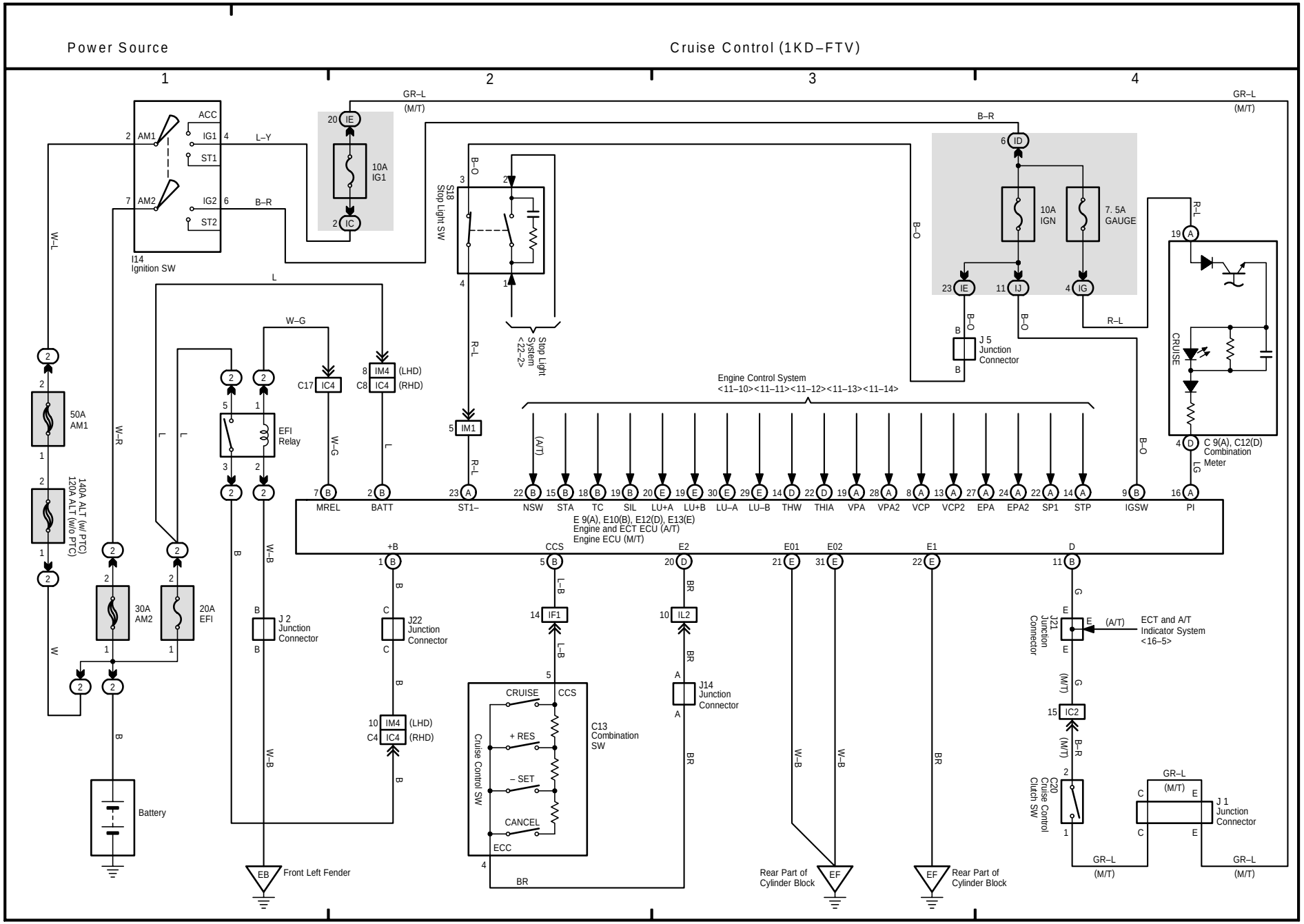

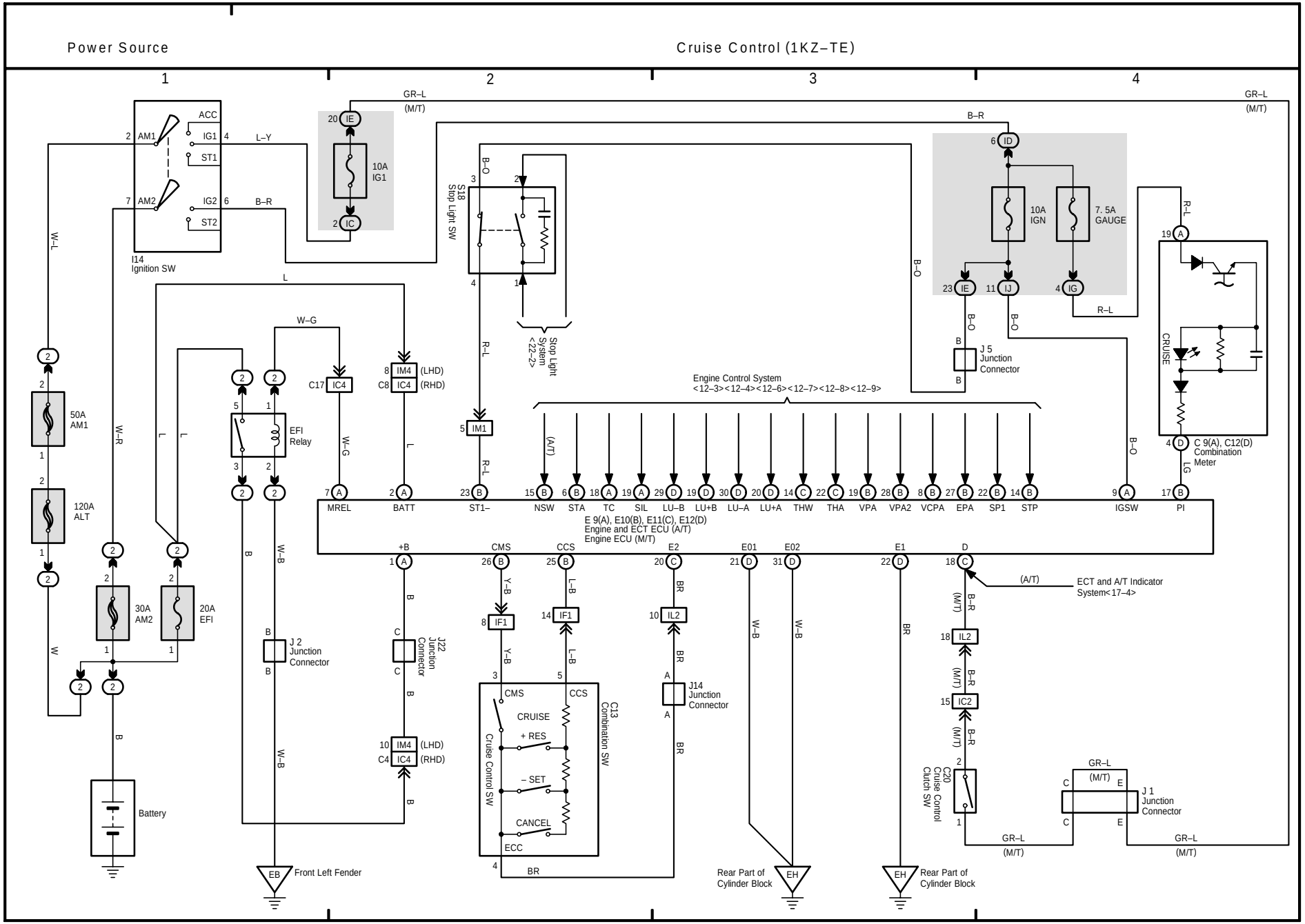
Power Source
Cruise Control (1KZ–TE)
1
2
3
4
I14
Ignition SW
ACC
IG1
ST1
AM1
AM2
IG2
ST2
L–Y
B–R
GR–L
(M/T)
10A
IG1
S18
Stop Light SW
Stop Light
System
<22–2>
10A
IGN
7. 5A
GAUGE
J 5
Junction
Connector
C 9(A), C12(D)
Combination
Meter
CRUISE
Engine Control System
<12–3><12–4><12–6><12–7><12–8><12–9>
50A
AM1
120A
ALT
30A
AM2
20A
EFI
EFI
Relay
C17 IC4
C8 IC4 (RHD)
IM4 (LHD)
IM1
MREL
BATT
ST1–
NSW
STA
TC
SIL
LU–B
LU+B
LU–A
LU+A
THW
THA
VPA
VPA2
VCPA
EPA
SP1
STP
IGSW
PI
E 9(A), E10(B), E11(C), E12(D)
Engine and ECT ECU (A/T)
Engine ECU (M/T)
+B
CMS
CCS
E2
E01
E02
E1
D
ECT and A/T Indicator
System<17–4>
IF1
IL2
IC2
J 2
Junction
Connector
J22
Junction
Connector
J14
Junction
Connector
C13
Combination SW
Cruise Control SW
CRUISE
+ RES
– SET
CANCEL
ECC
C20
Cruise Control
Clutch SW
J 1
Junction
Connector
Battery
EB
Front Left Fender
EH
Rear Part of
Cylinder Block

20 LAND CRUISER / LAND CRUISER PRADO

(Cont. next page)

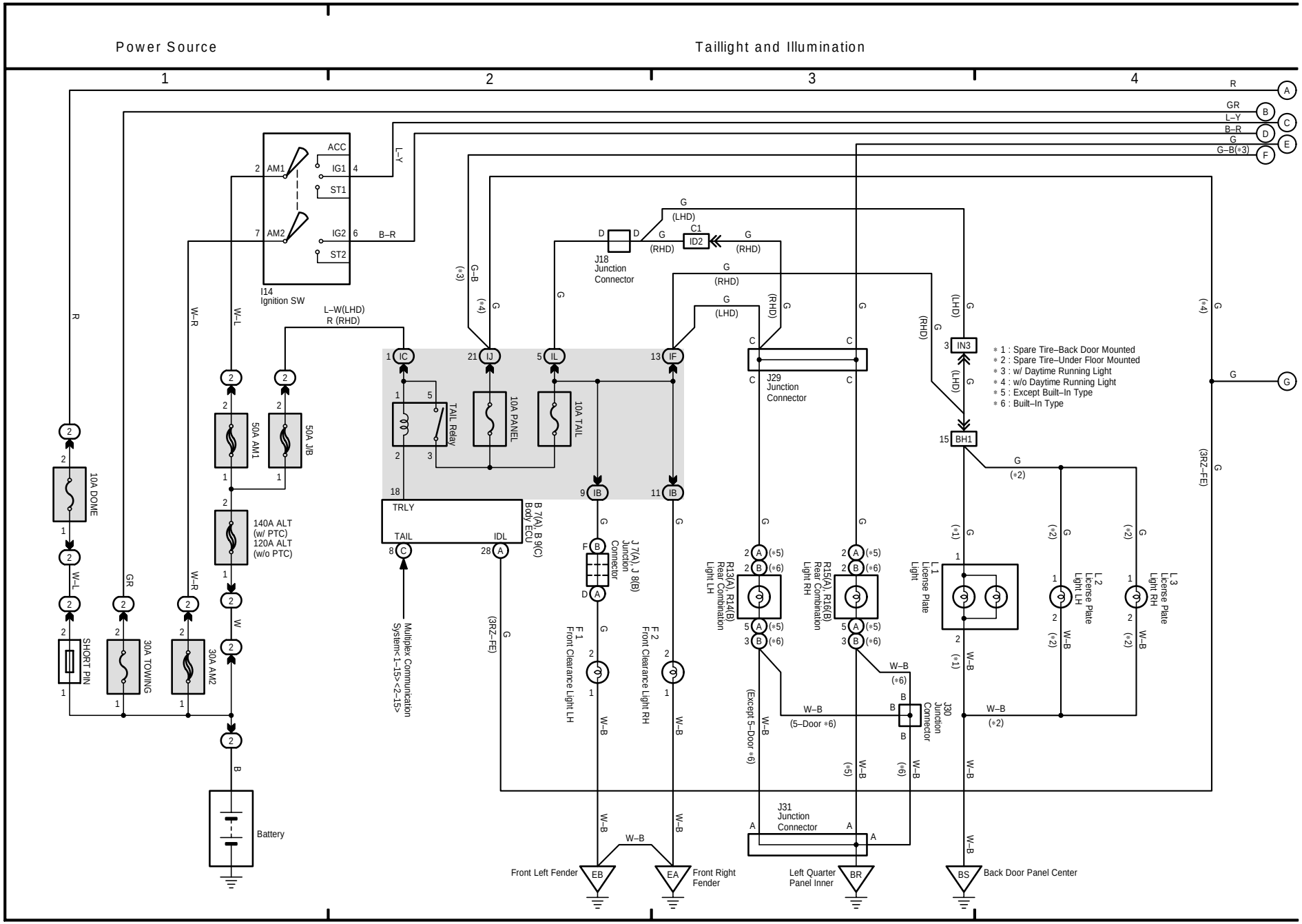

(Cont. next page)

Taillight and Illumination

∗ 3 : w/ Daytime Running Light
∗ 7 : w/ Navigation System
∗ 8 : w/o Navigation System
∗ 9 : Automatic A/C
∗10 : Manual A/C
∗11 : w/ Active Height Control Suspension and Electric Modulated Air Suspension
∗12 : A/T w/ VSC

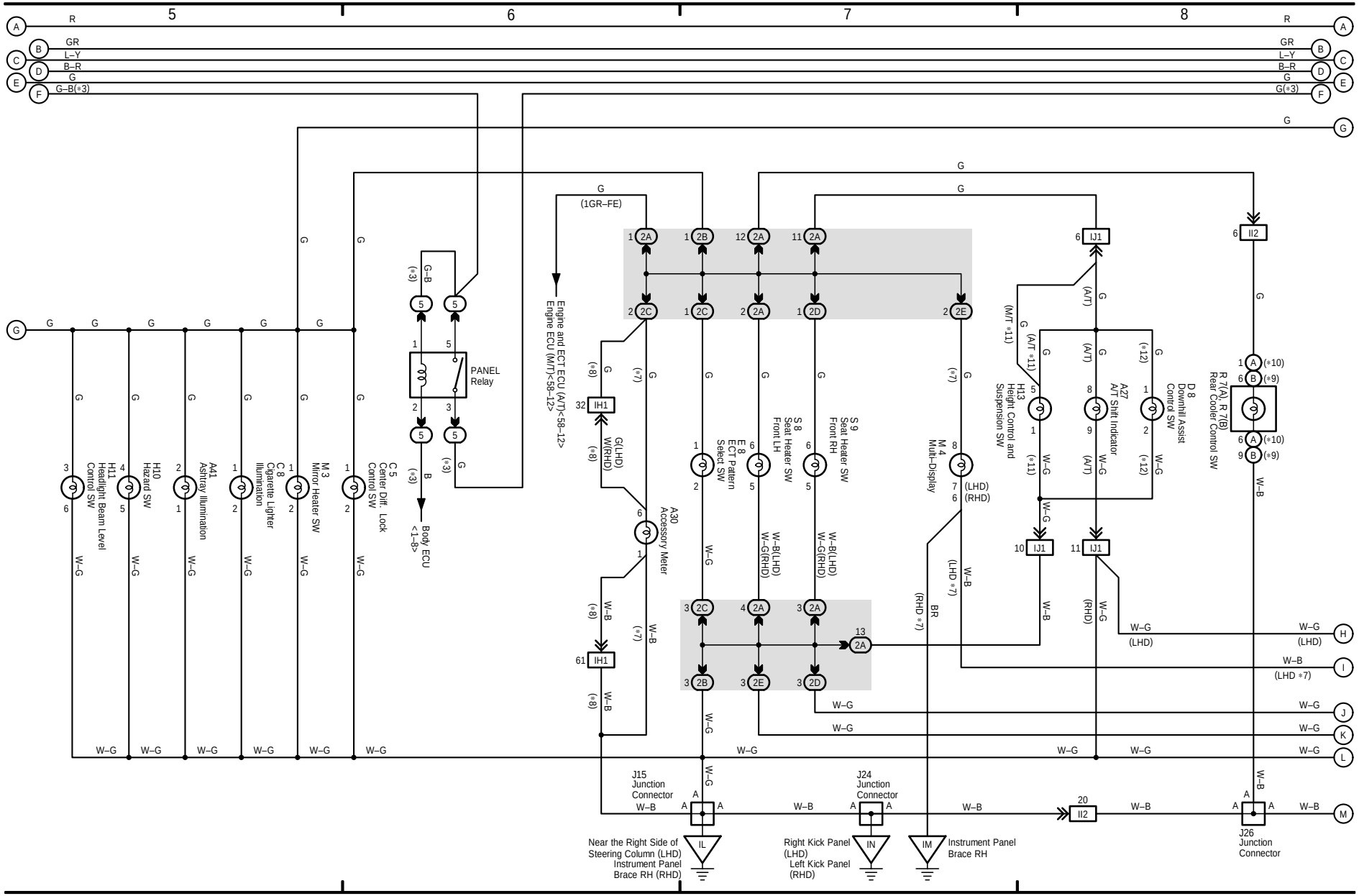

20 LAND CRUISER / LAND CRUISER PRADO (Cont' d)

(Cont. next page)

Taillight and Illumination

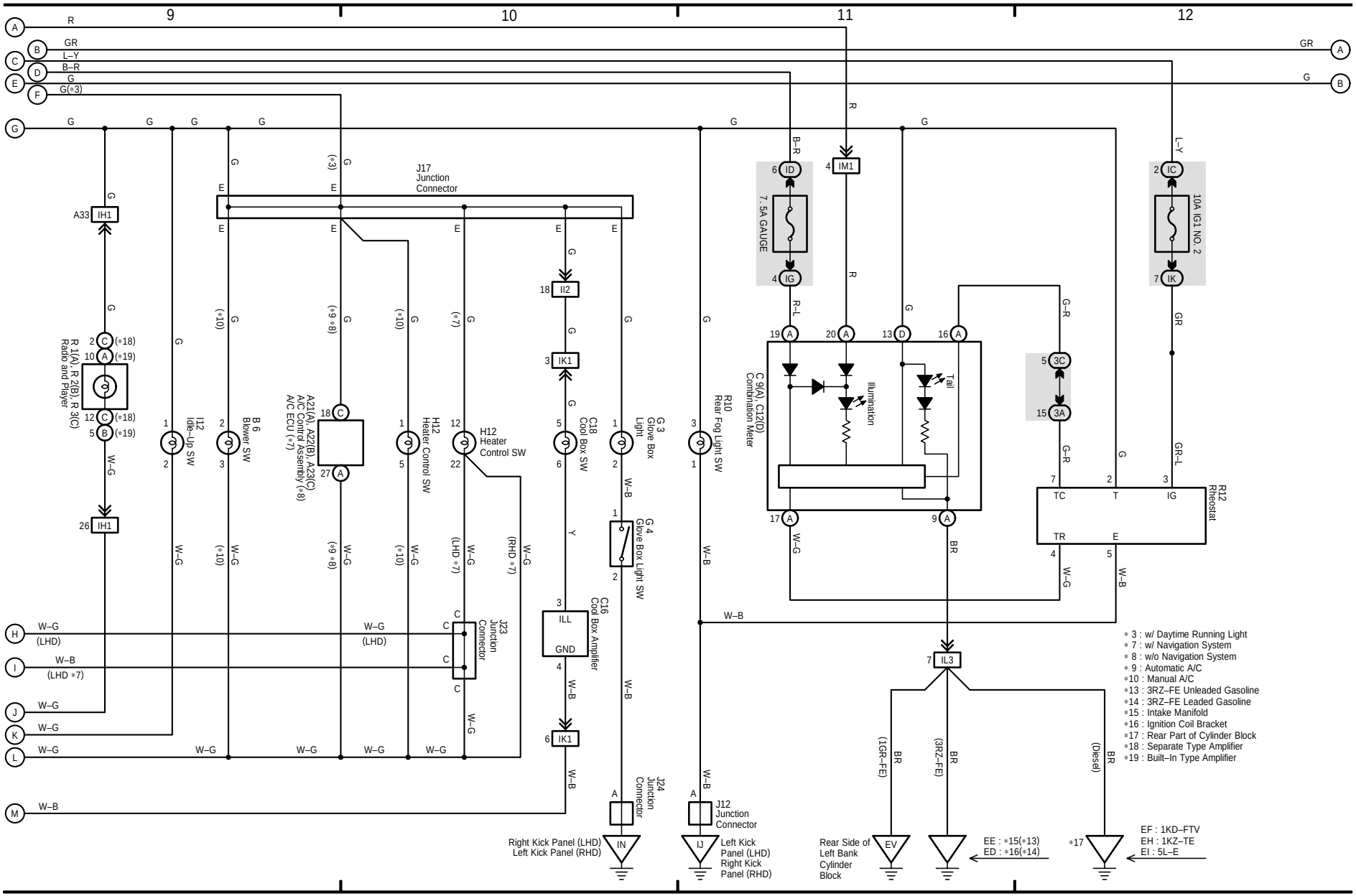

Trailer Towing

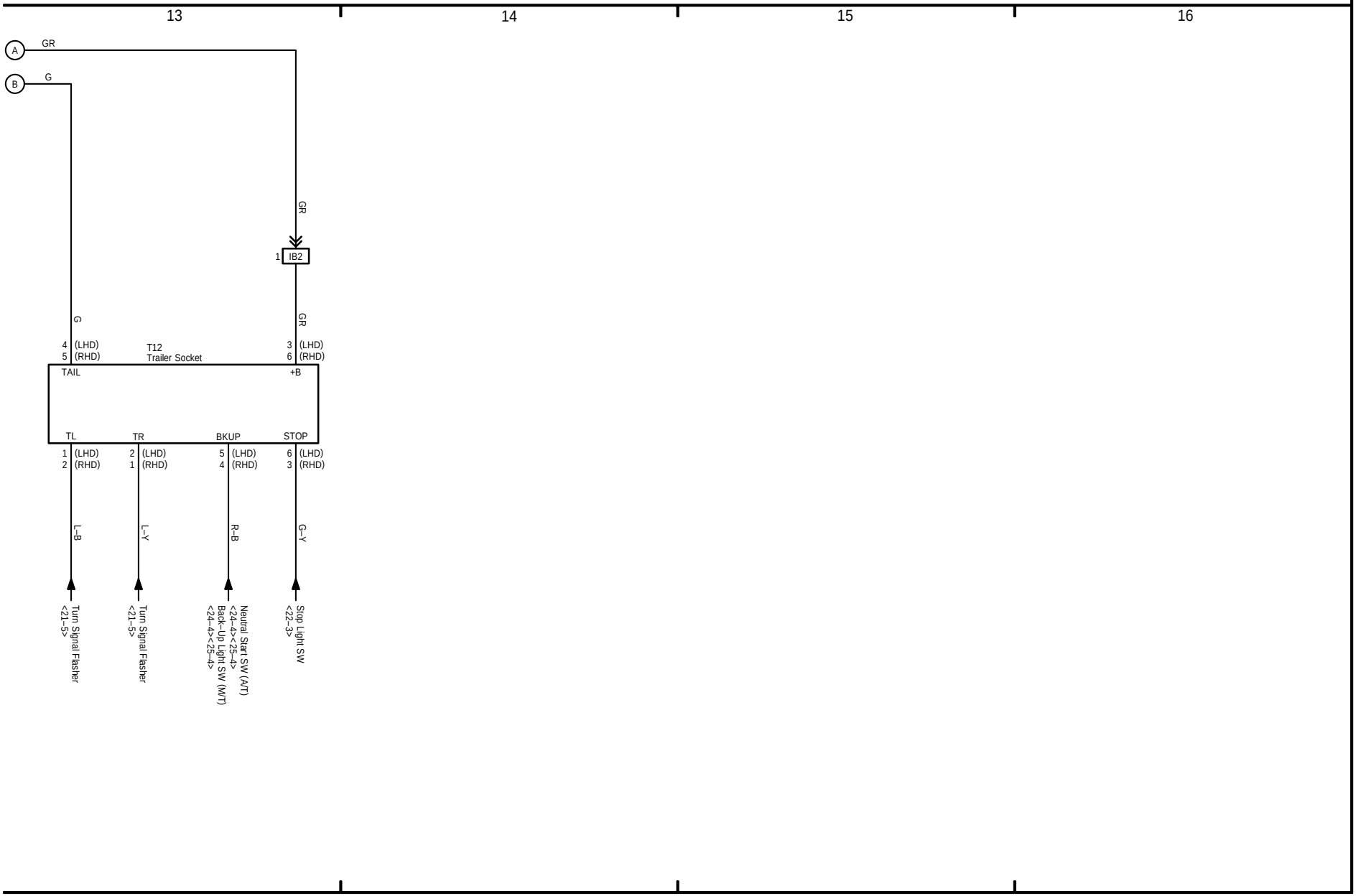

21 LAND CRUISER / LAND CRUISER PRADO

(Cont. next page)

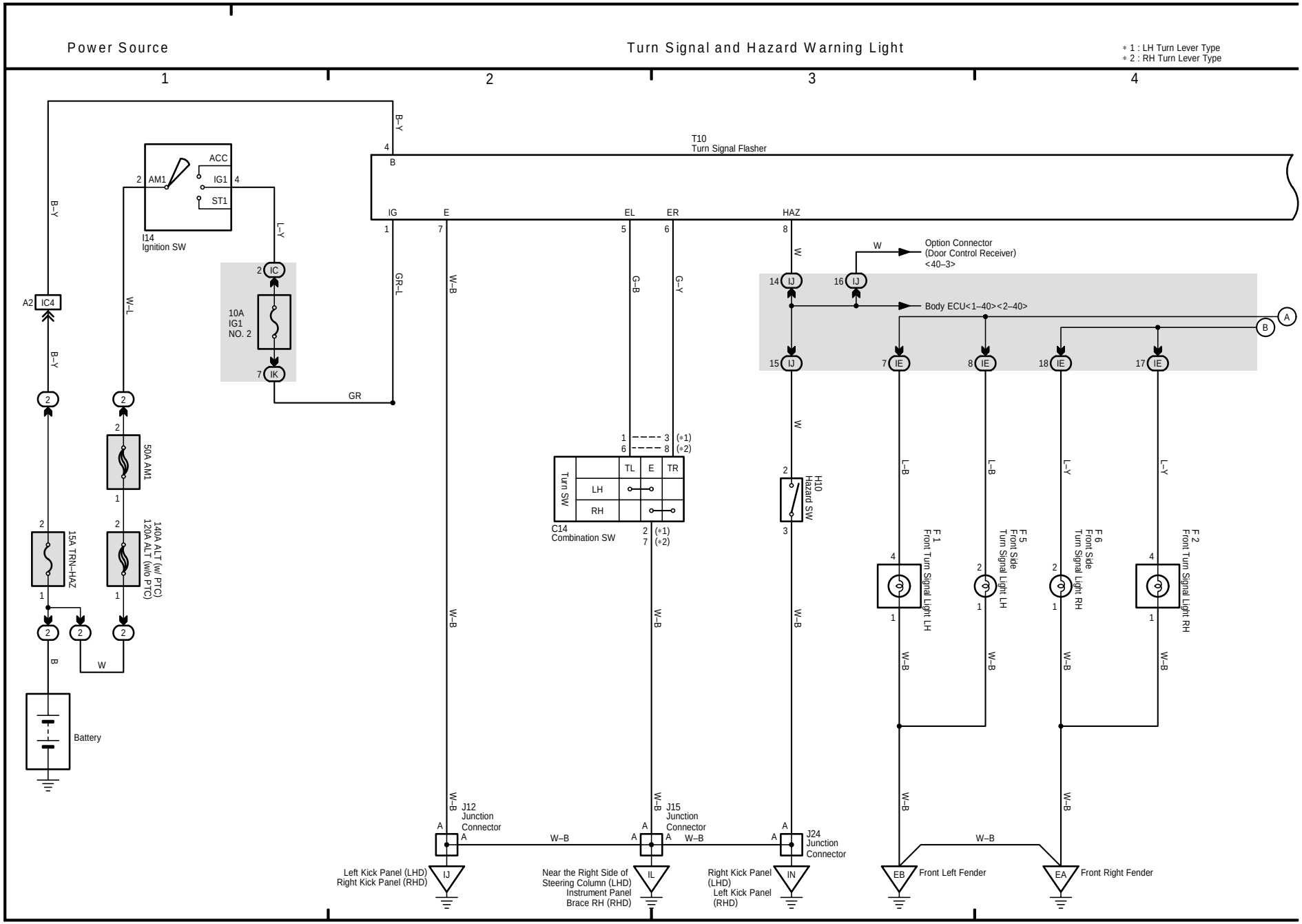

Turn Signal and Hazard Warning Light

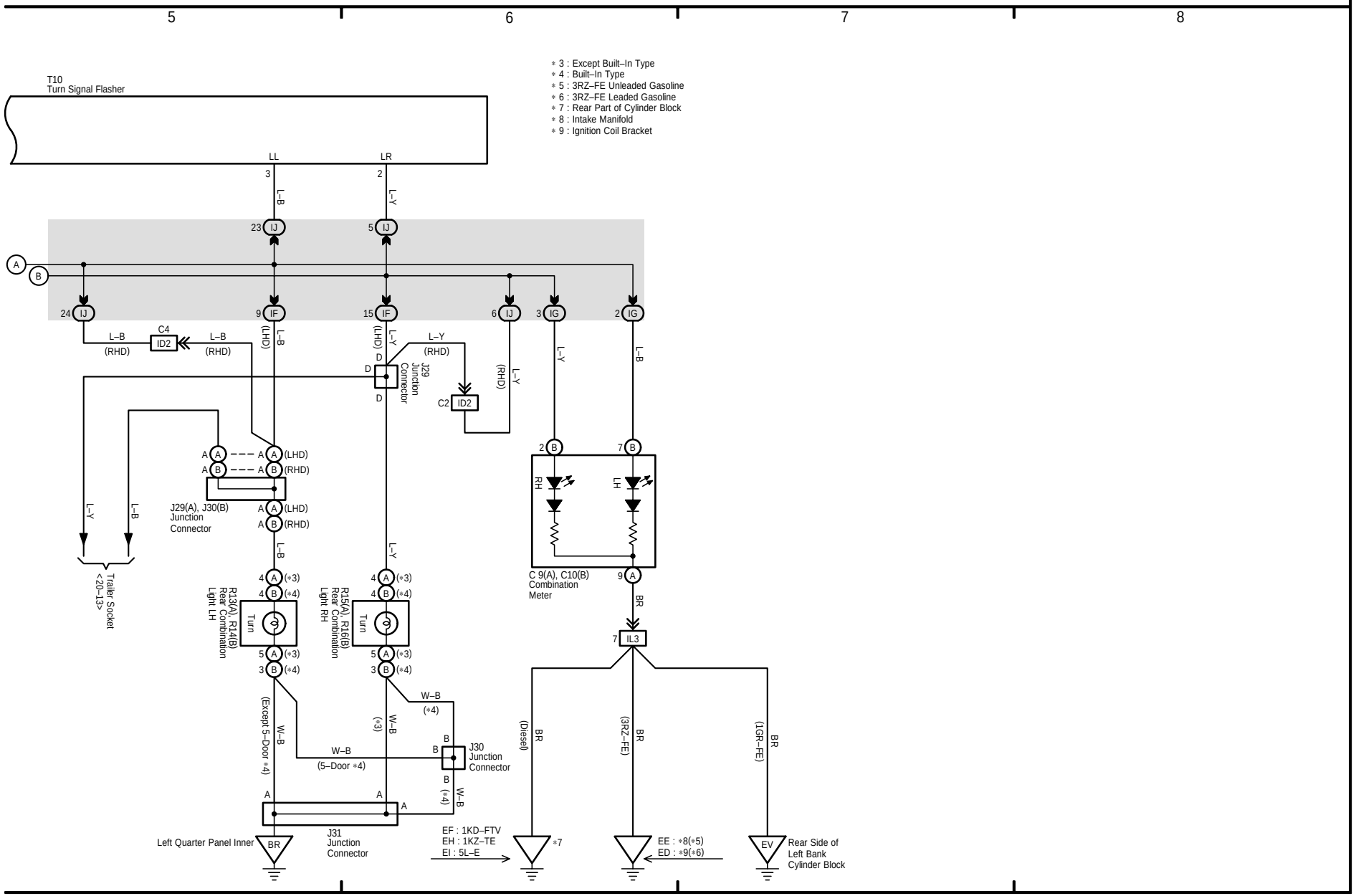

22 LAND CRUISER / LAND CRUISER PRADO

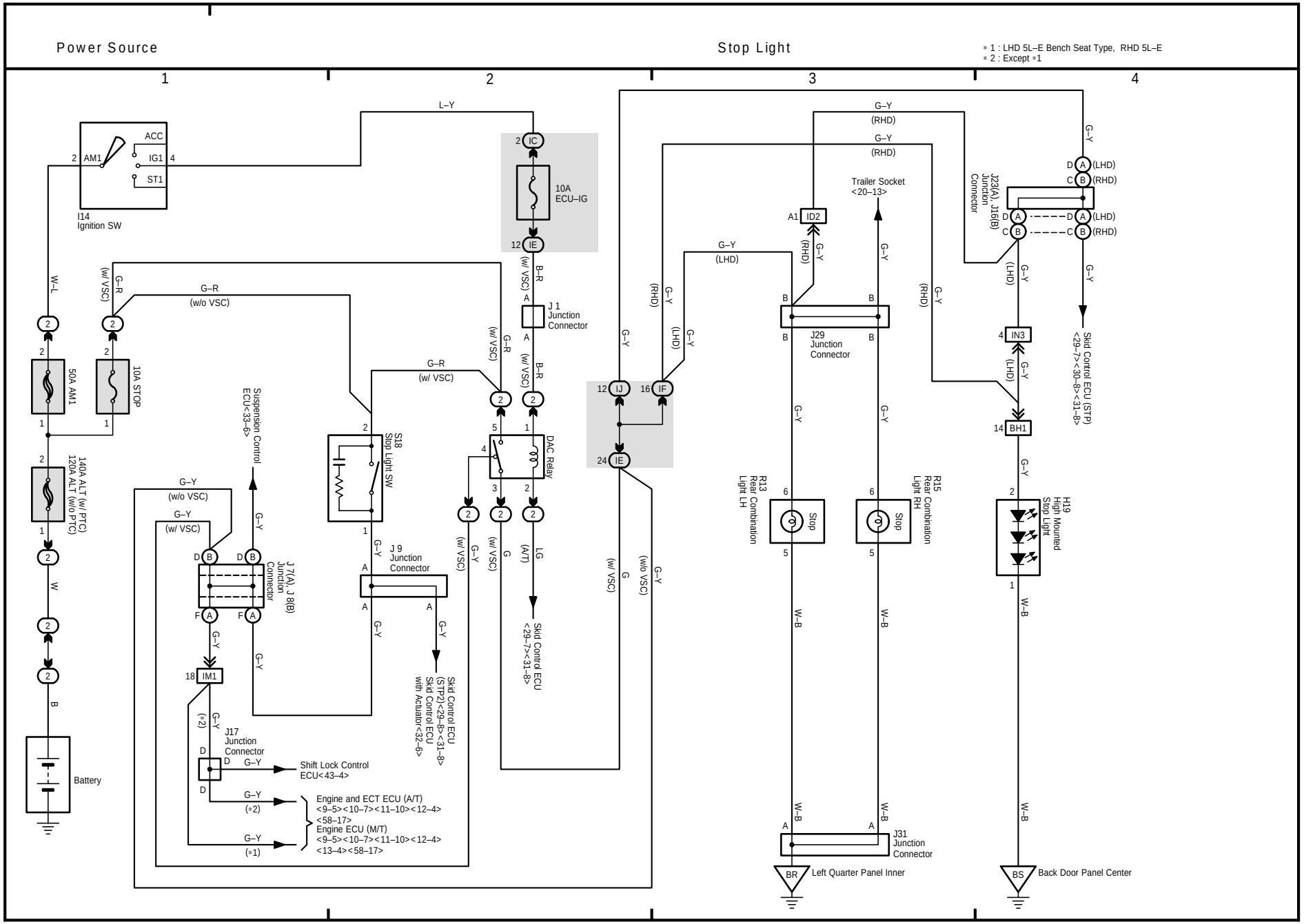

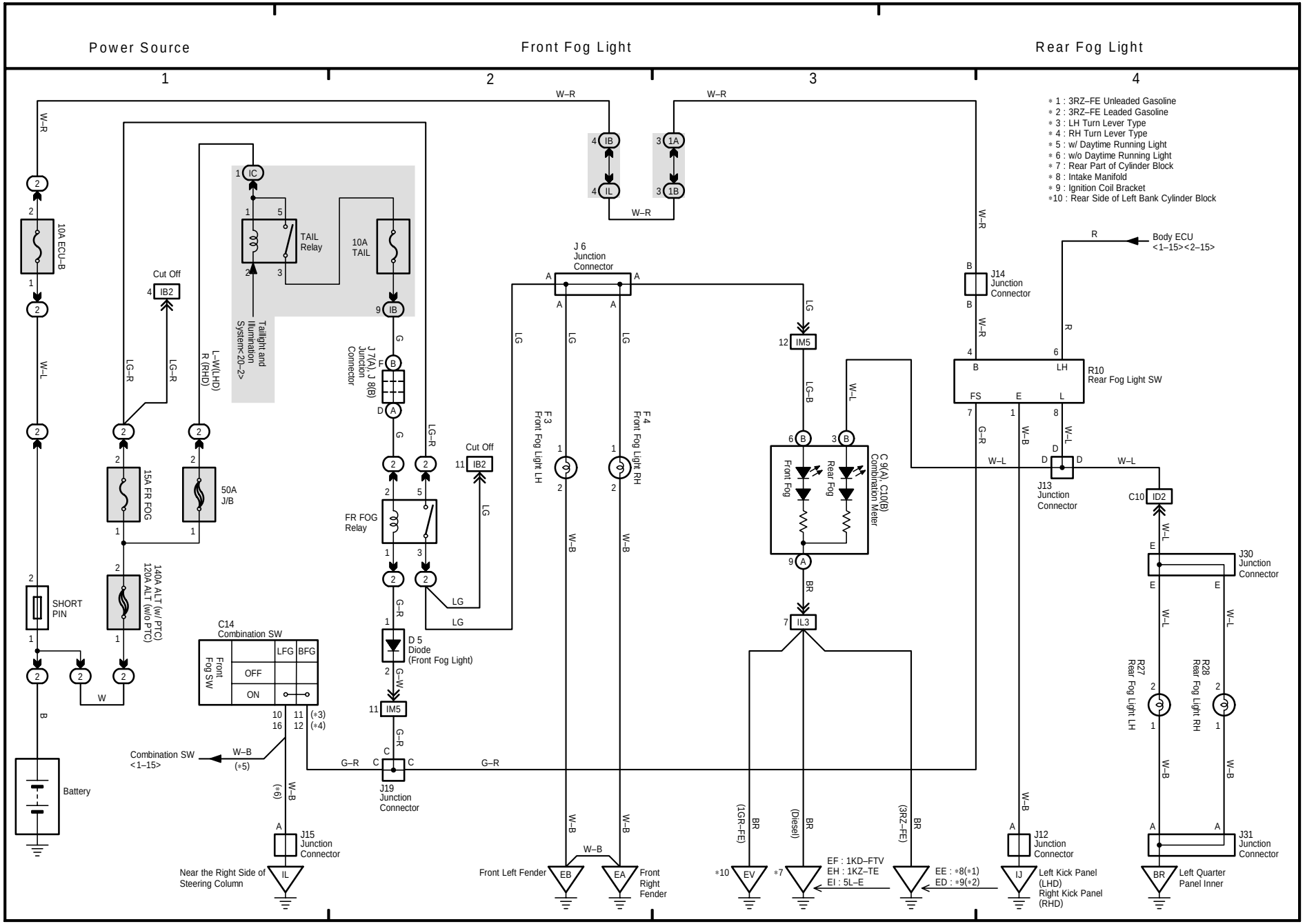
Power Source
Front Fog Light
Rear Fog Light
1
2
3
4
∗1 : 3RZ–FE Unleaded Gasoline
∗2 : 3RZ–FE Leaded Gasoline
∗3 : LH Turn Lever Type
∗4 : RH Turn Lever Type
∗5 : w/ Daytime Running Light
∗6 : w/o Daytime Running Light
∗7 : Rear Part of Cylinder Block
∗8 : Intake Manifold
∗9 : Ignition Coil Bracket
∗10 : Rear Side of Left Bank Cylinder Block
10A ECU–B
SHORT PIN
Battery
Cut Off
IB2
TAIL Relay
10A TAIL
Taillight and Illumination System<20–2>
L–W(LHD) R (RHD)
15A FR FOG
50A J/B
140A ALT (w/ PTC) 120A ALT (w/o PTC)
J 7(A) J 8(B) Junction Connector
FR FOG Relay
D 5 Diode (Front Fog Light)
C14 Combination SW
Front Fog SW
LFG
BFG
OFF
ON
Combination SW <1–15>
J15 Junction Connector
Near the Right Side of Steering Column
J 6 Junction Connector
J19 Junction Connector
F 3 Front Fog Light LH
F 4 Front Fog Light RH
Front Left Fender
Front Right Fender
C 9(A), C10(B) Combination Meter
Front Fog
Rear Fog
EF : 1KD–FTV
EH : 1KZ–TE
EI : 5L–E
EE : ∗8(∗1)
ED : ∗9(∗2)
J14 Junction Connector
Body ECU <1–15><2–15>
R10 Rear Fog Light SW
J13 Junction Connector
J12 Junction Connector
Left Kick Panel (LHD)
Right Kick Panel (RHD)
J30 Junction Connector
J31 Junction Connector
R27 Rear Fog Light LH
R28 Rear Fog Light RH
Left Quarter Panel Inner

24 LAND CRUISER / LAND CRUISER PRADO

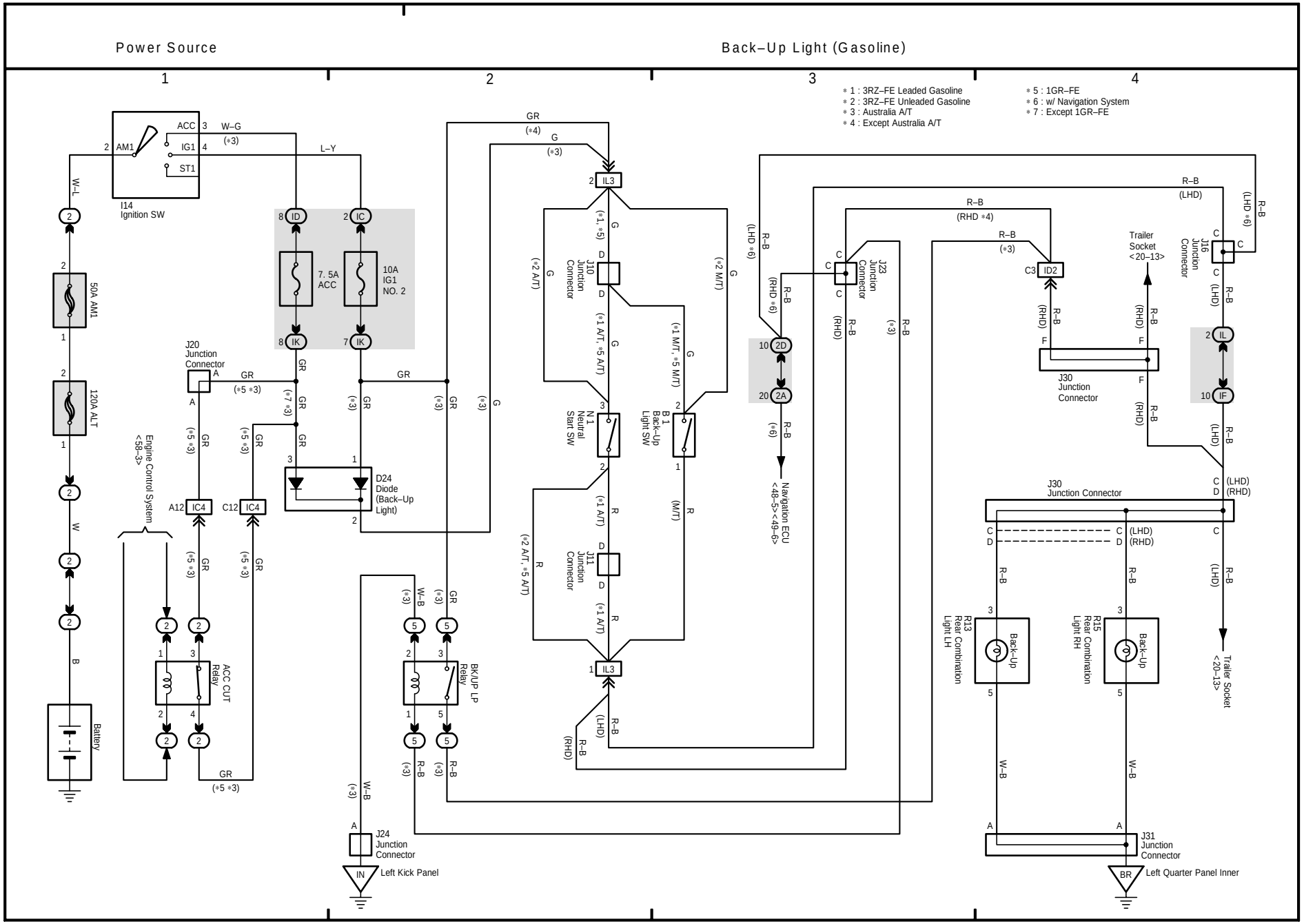

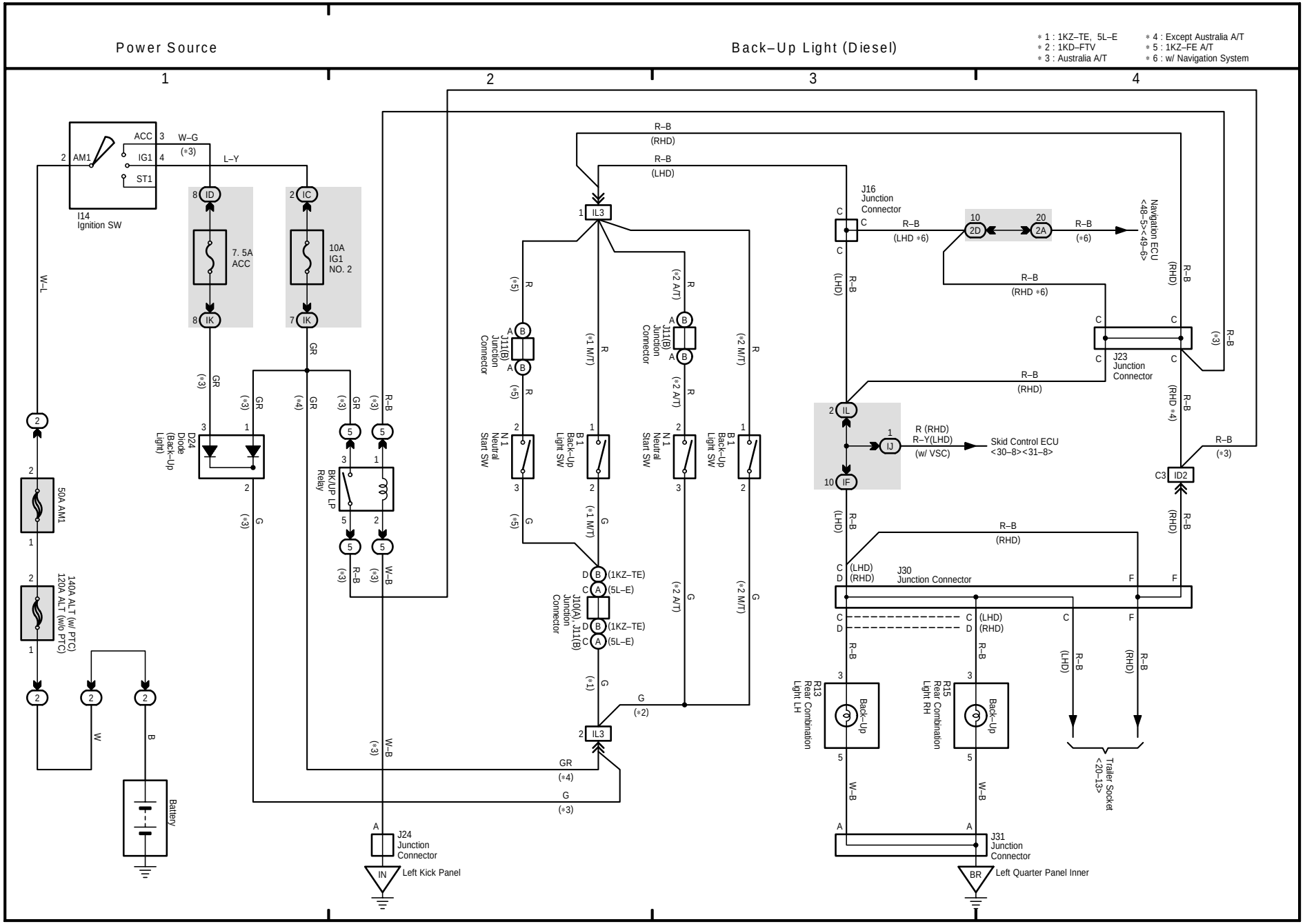
Power Source
Back–Up Light (Diesel)
∗1 : 1KZ–TE, 5L–E
∗2 : 1KD–FTV
∗3 : Australia A/T
∗4 : Except Australia A/T
∗5 : 1KZ–FE A/T
∗6 : w/ Navigation System
1
2
3
4
I14 Ignition SW
AM1
ACC
IG1
ST1
W–G (∗3)
L–Y
7. 5A ACC
10A IG1 NO. 2
D24 Diode (Back–Up Light)
BK/UP LP Relay
50A AM1
140A ALT (w/ PTC) 120A ALT (w/o PTC)
Battery
J11(B) Junction Connector
N 1 Neutral Start SW
B 1 Back–Up Light SW
J10(A), J11(B) Junction Connector
(1KZ–TE)
(5L–E)
J24 Junction Connector
Left Kick Panel
J16 Junction Connector
Navigation ECU <46–5><49–6>
J23 Junction Connector
Skid Control ECU <30–8><31–8>
(w/ VSC)
J30 Junction Connector
R13 Rear Combination Light LH
R15 Rear Combination Light RH
Back–Up
Trailer Socket <20–13>
J31 Junction Connector
Left Quarter Panel Inner

26 LAND CRUISER / LAND CRUISER PRADO

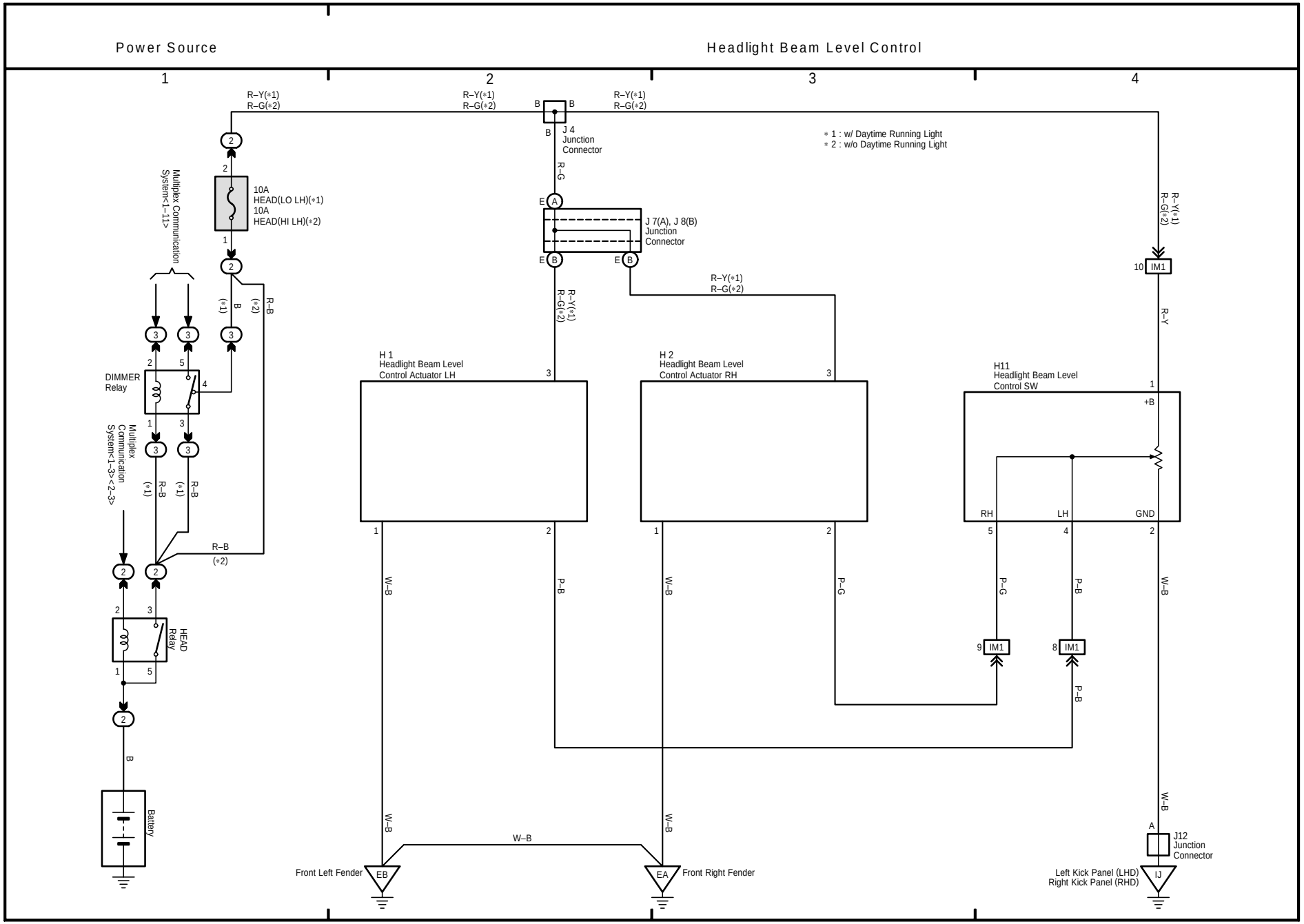

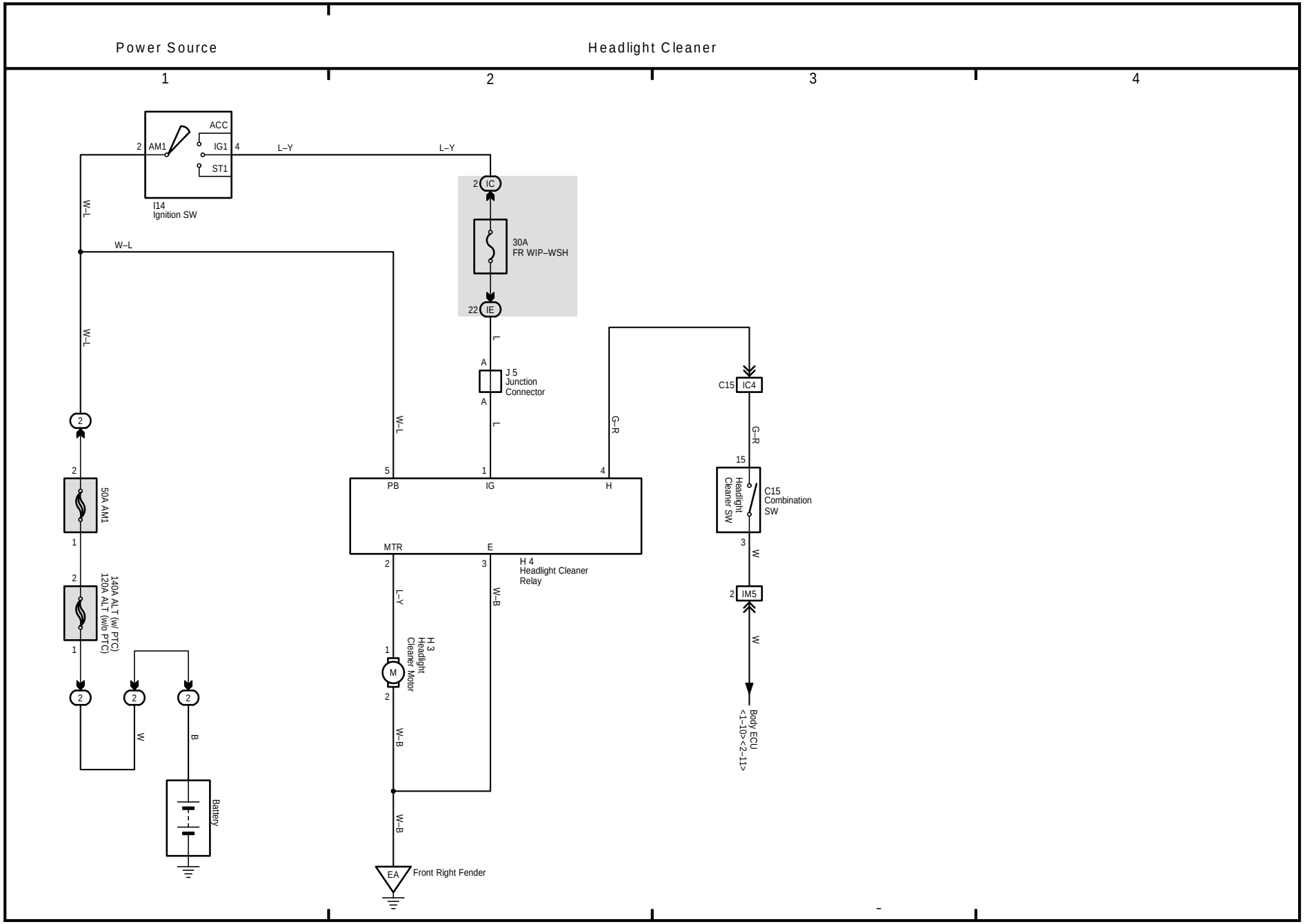
Power Source
Headlight Cleaner
1
2
3
4
ACC
IG1
ST1
AM1
I14
Ignition SW
L–Y
L–Y
W–L
W–L
W–L
2 IC
30A
FR WIP–WSH
22 IE
L
A
J 5
Junction
Connector
A
L
W–L
G–R
C15 IC4
G–R
15
Headlight
Cleaner SW
C15
Combination
SW
3
W
2 IM5
W
Body ECU
<1–10><2–11>
50A AM1
140A ALT (w/ PTC)
120A ALT (w/o PTC)
W
B
Battery
5
PB
1
IG
4
H
MTR
2
E
3
H 4
Headlight Cleaner
Relay
L–Y
W–B
H 3
Headlight
Cleaner Motor
W–B
W–B
EA
Front Right Fender

28 LAND CRUISER / LAND CRUISER PRADO

(Cont. next page)

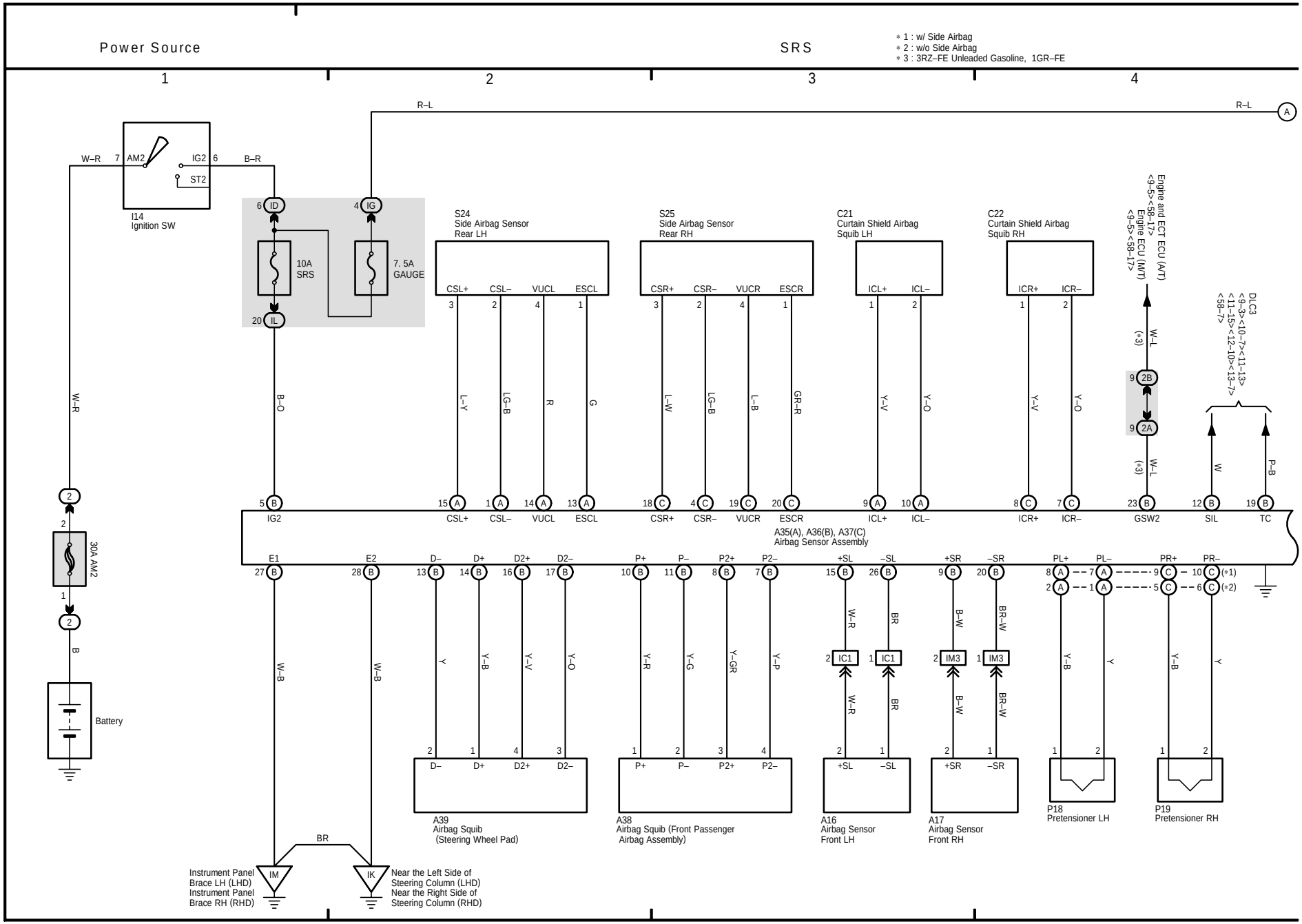

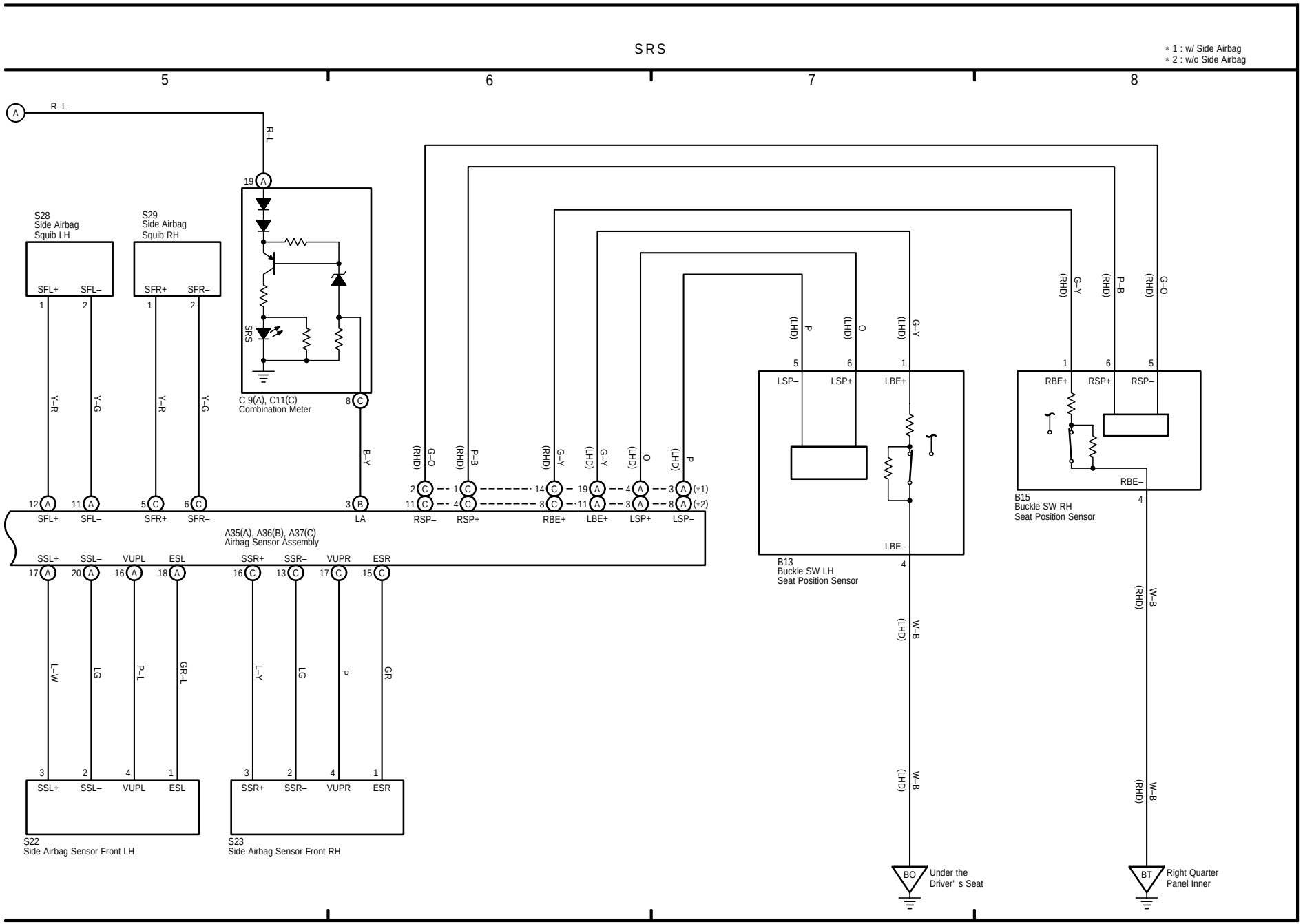
SRS
* 1 : w/ Side Airbag
* 2 : w/o Side Airbag
5
6
7
8
R–L
S28
Side Airbag
Squib LH
SFL+
SFL–
S29
Side Airbag
Squib RH
SFR+
SFR–
C 9(A), C11(C)
Combination Meter
SRS
Y–R
Y–G
B–Y
G–O
P–B
G–Y
O
P
W–B
LA
RSP–
RSP+
RBE+
LBE+
LSP+
LSP–
A35(A), A36(B), A37(C)
Airbag Sensor Assembly
SSL+
SSL–
VUPL
ESL
SSR+
SSR–
VUPR
ESR
L–W
LG
P–L
GR–L
L–Y
GR
S22
Side Airbag Sensor Front LH
S23
Side Airbag Sensor Front RH
B13
Buckle SW LH
Seat Position Sensor
B15
Buckle SW RH
Seat Position Sensor
RBE–
LBE–
(RHD)
(LHD)
BO
Under the
Driver' s Seat
BT
Right Quarter
Panel Inner

29 LAND CRUISER / LAND CRUISE PRADO

(Cont. next page)

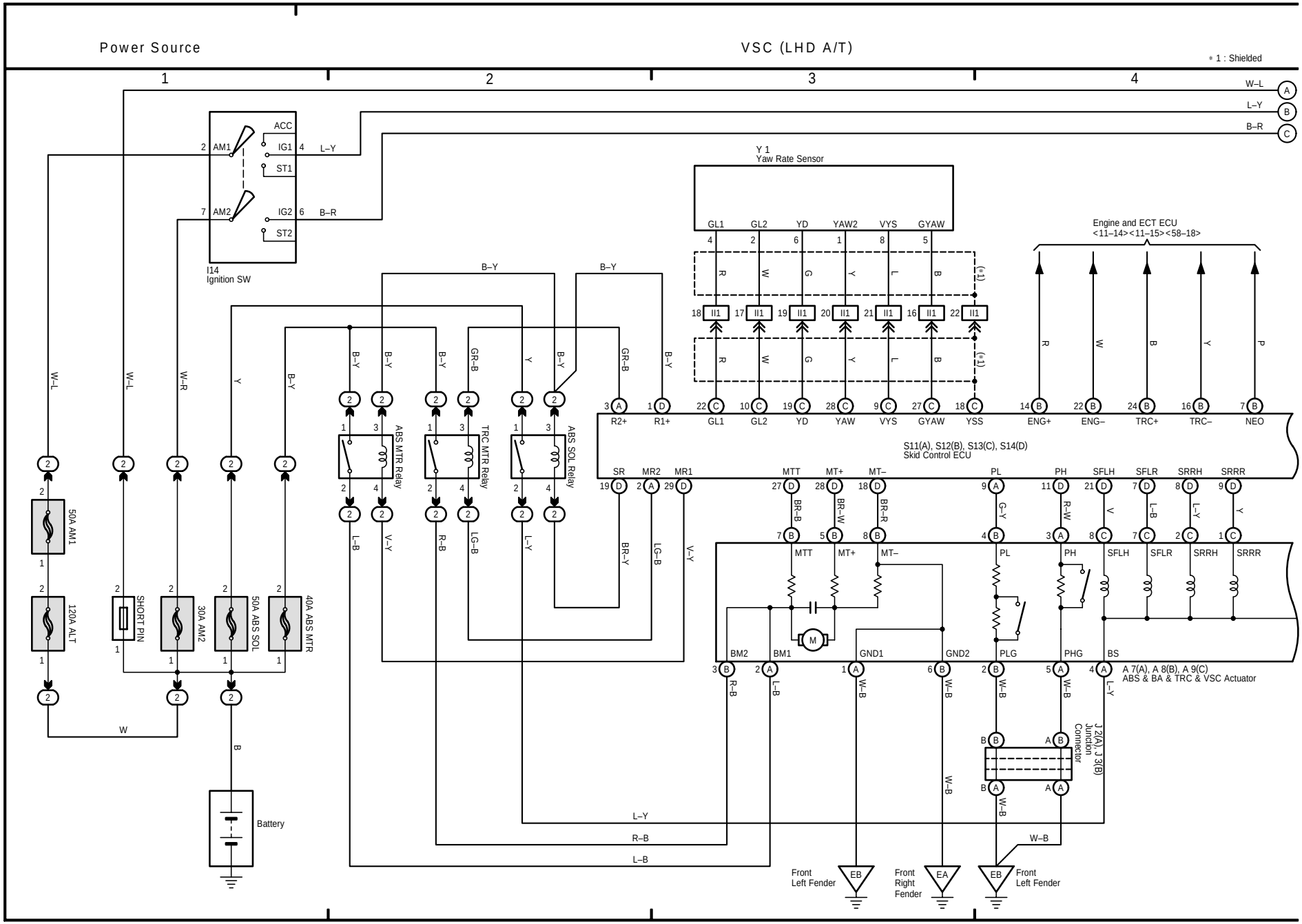

(Cont. next page)

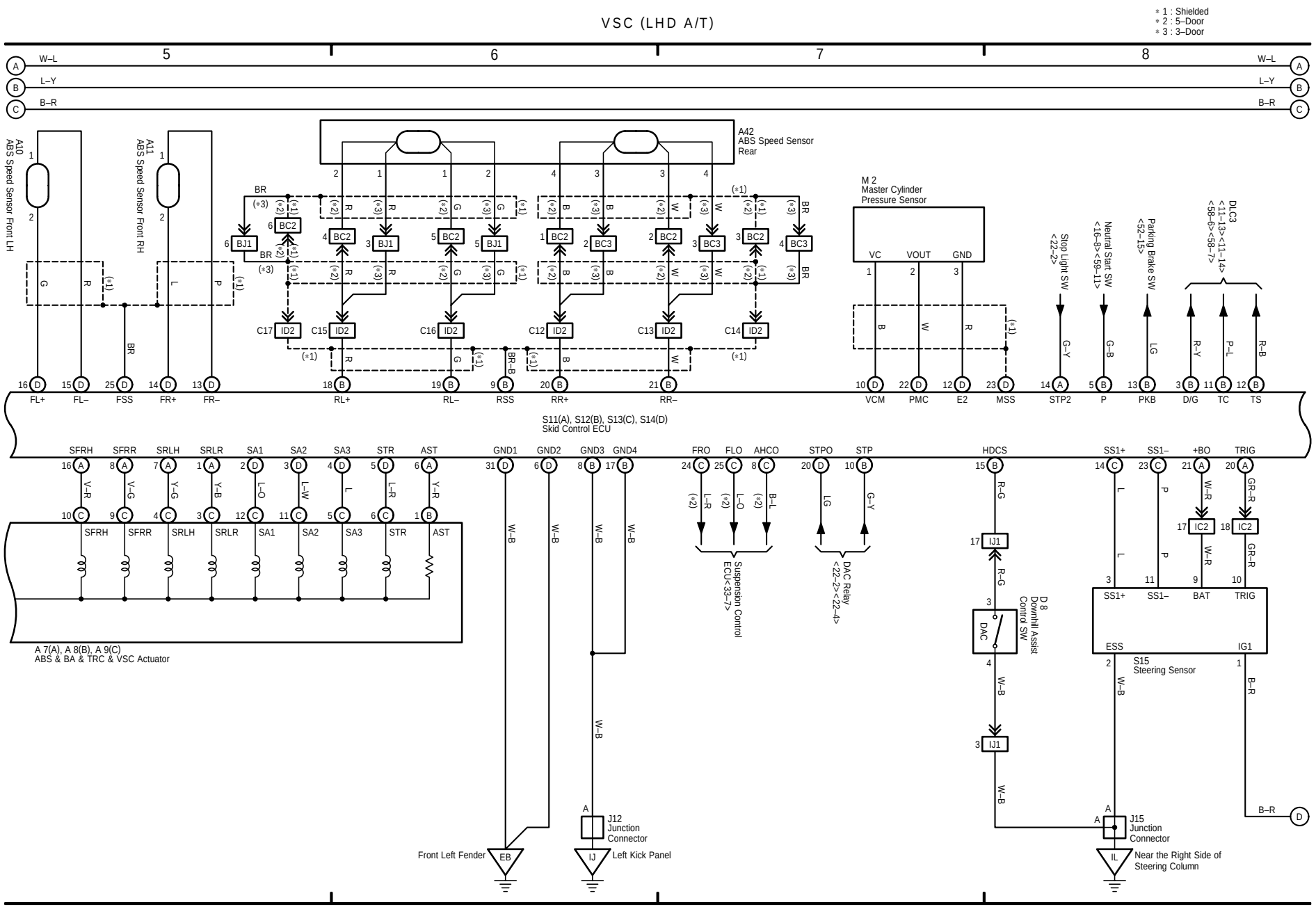

29 LAND CRUISER / LAND CRUISE PRADO (Cont' d)

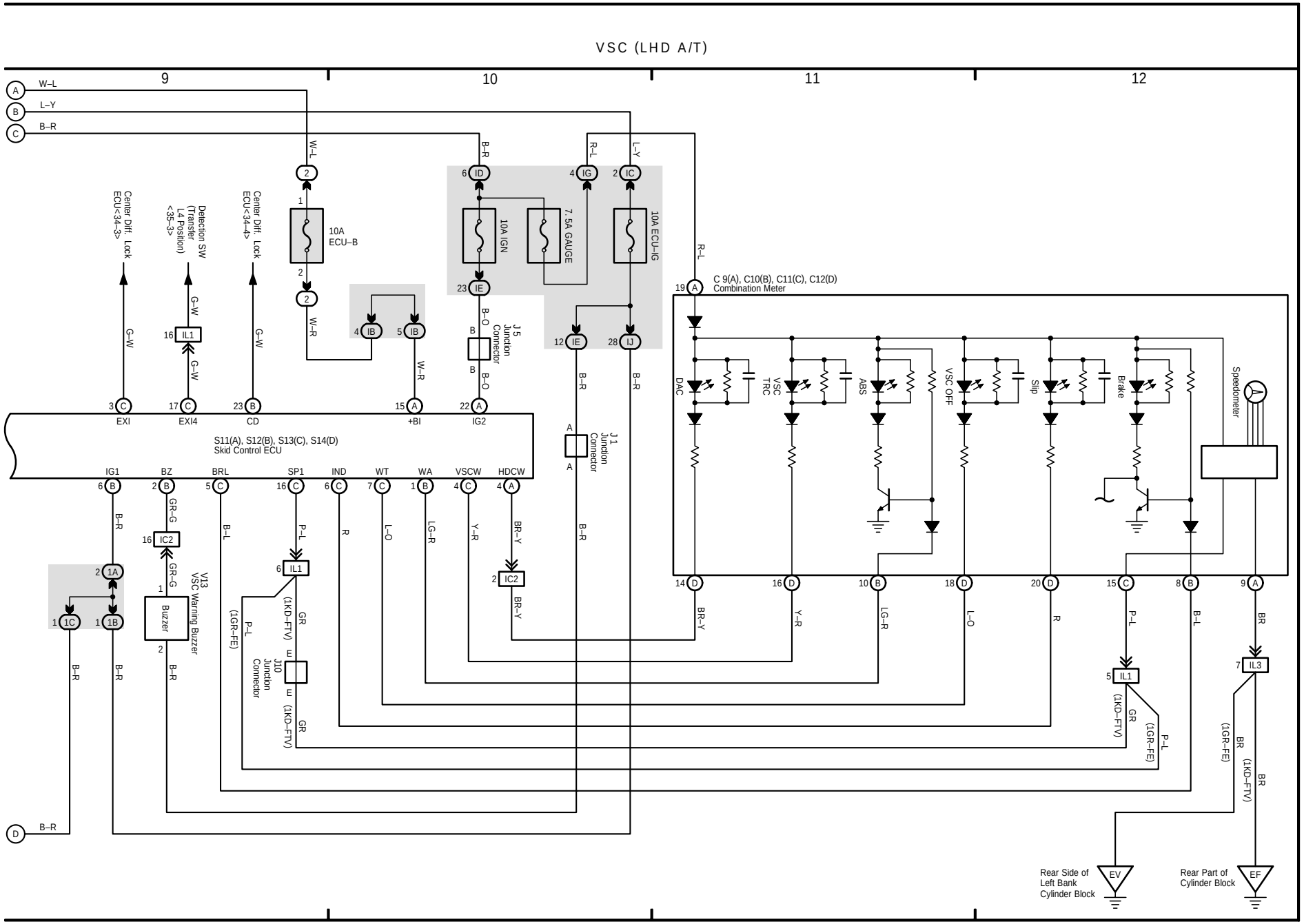

(Cont. next page)

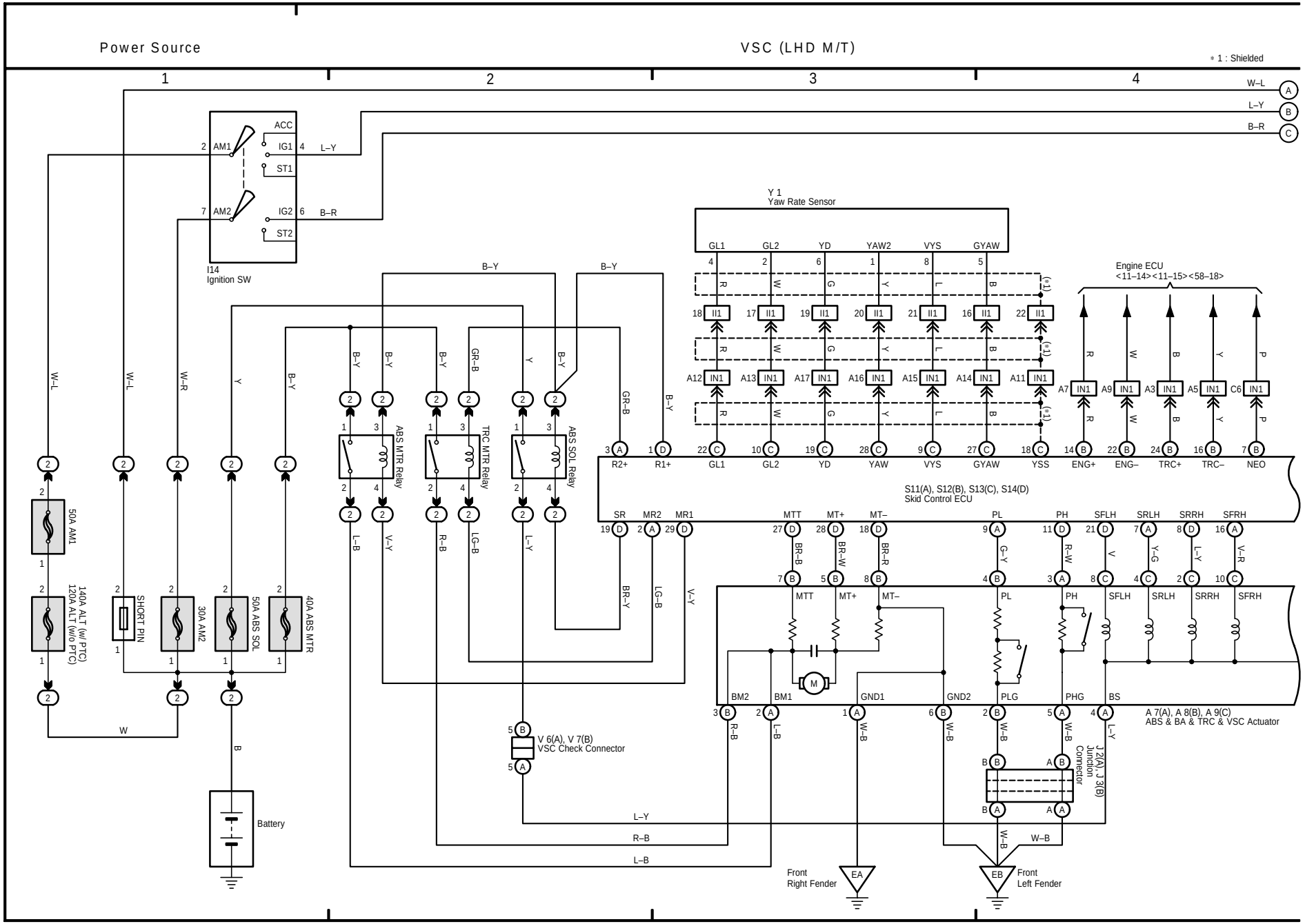

30 LAND CRUISE / LAND CRUISE PRADO (Cont' d)

(Cont. next page)

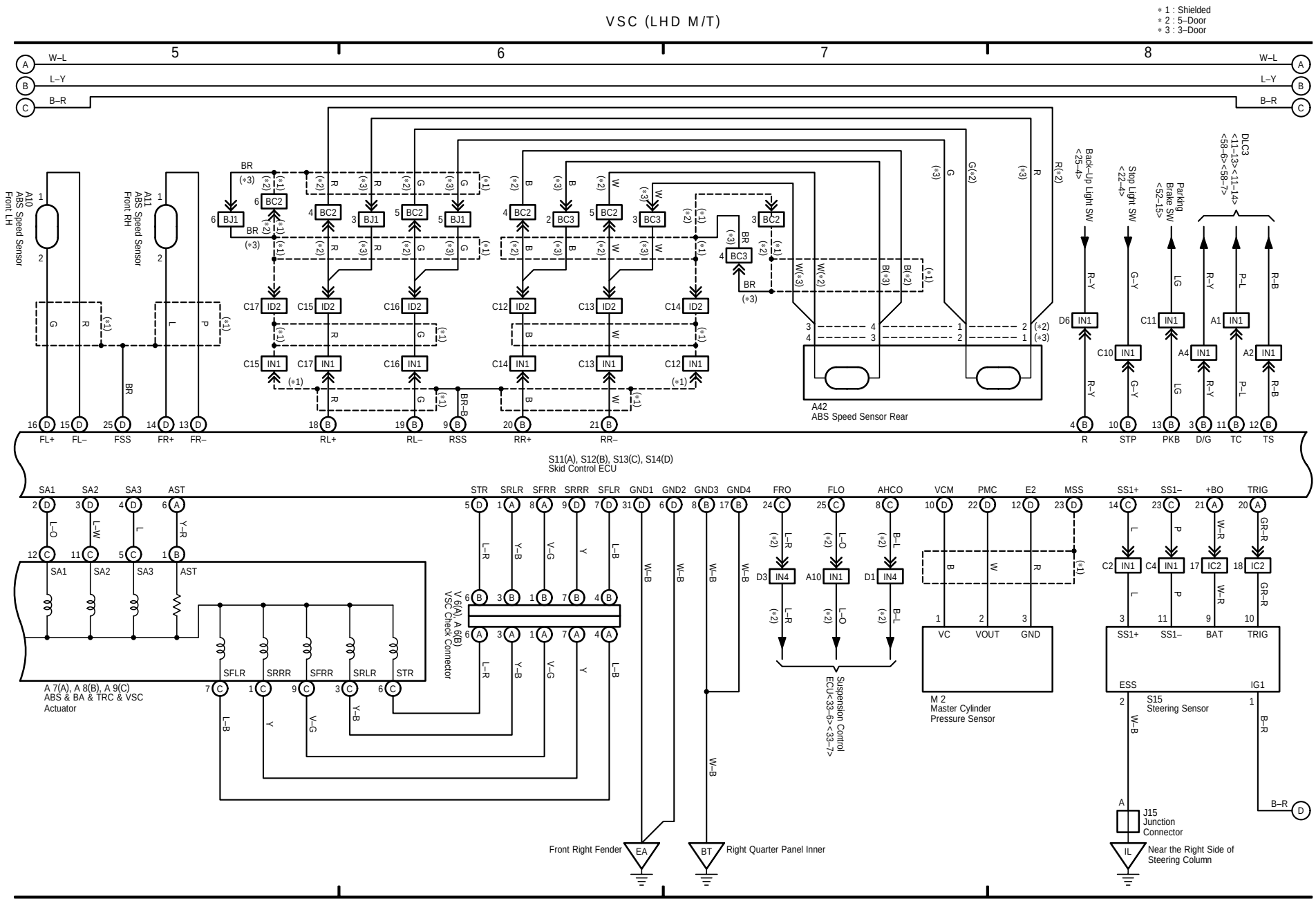

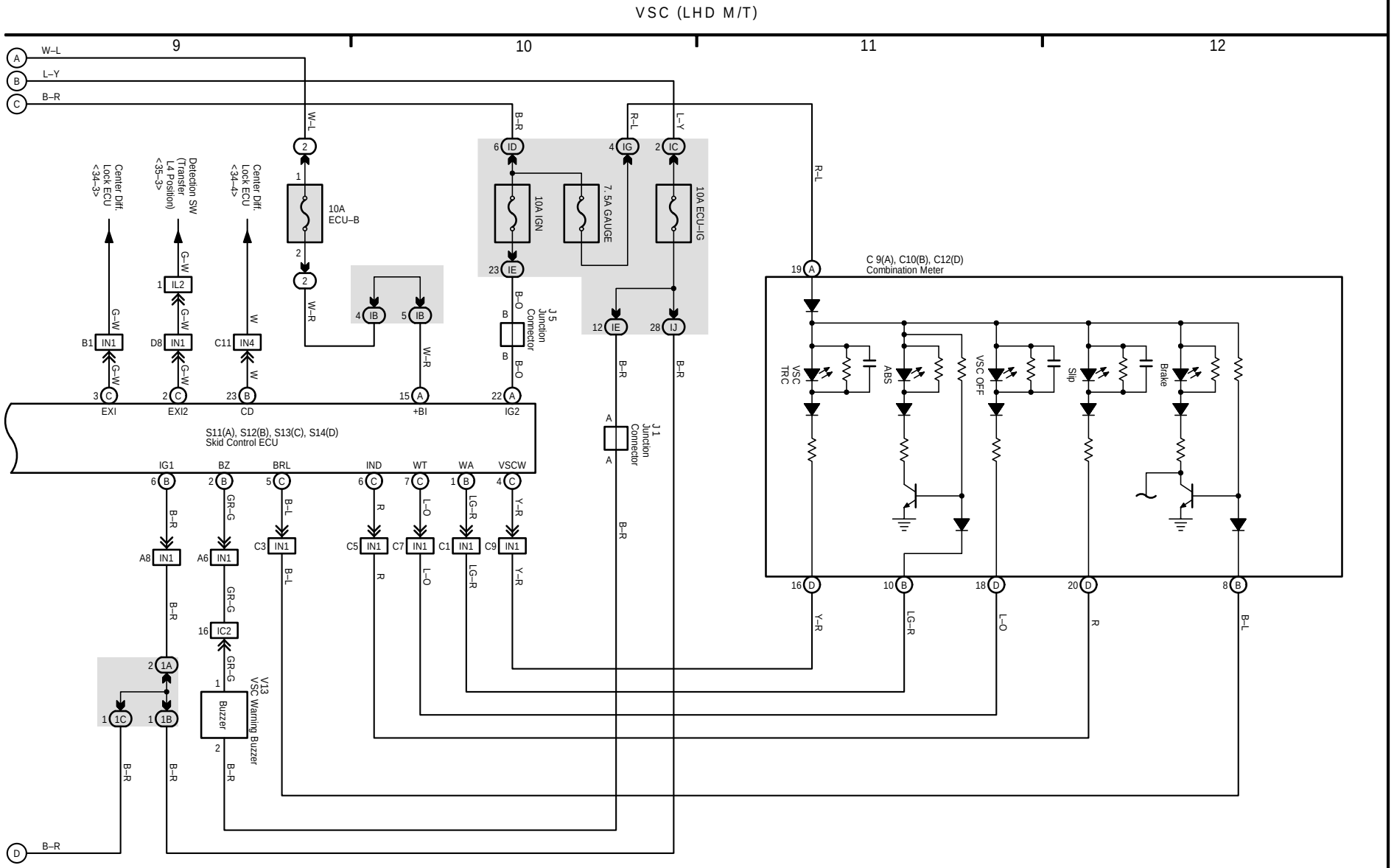
VSC (LHD M/T)
9
10
11
12
W–L
L–Y
B–R
10A ECU–B
10A IGN
7. 5A GAUGE
10A ECU–IG
Center Diff. Lock ECU <34–3>
Detection SW (Transfer L4 Position) <35–3>
Center Diff. Lock ECU <34–4>
J5 Junction Connector
J1 Junction Connector
C 9(A), C10(B), C12(D) Combination Meter
VSC TRC
ABS
VSC OFF
Slip
Brake
S11(A), S12(B), S13(C), S14(D) Skid Control ECU
EXI
EXI2
CD
+BI
IG2
IG1
BZ
BRL
IND
WT
WA
VSCW
V13 VSC Warning Buzzer
Buzzer

31 LAND CRUISER / LAND CRUISE PRADO

(Cont. next page)

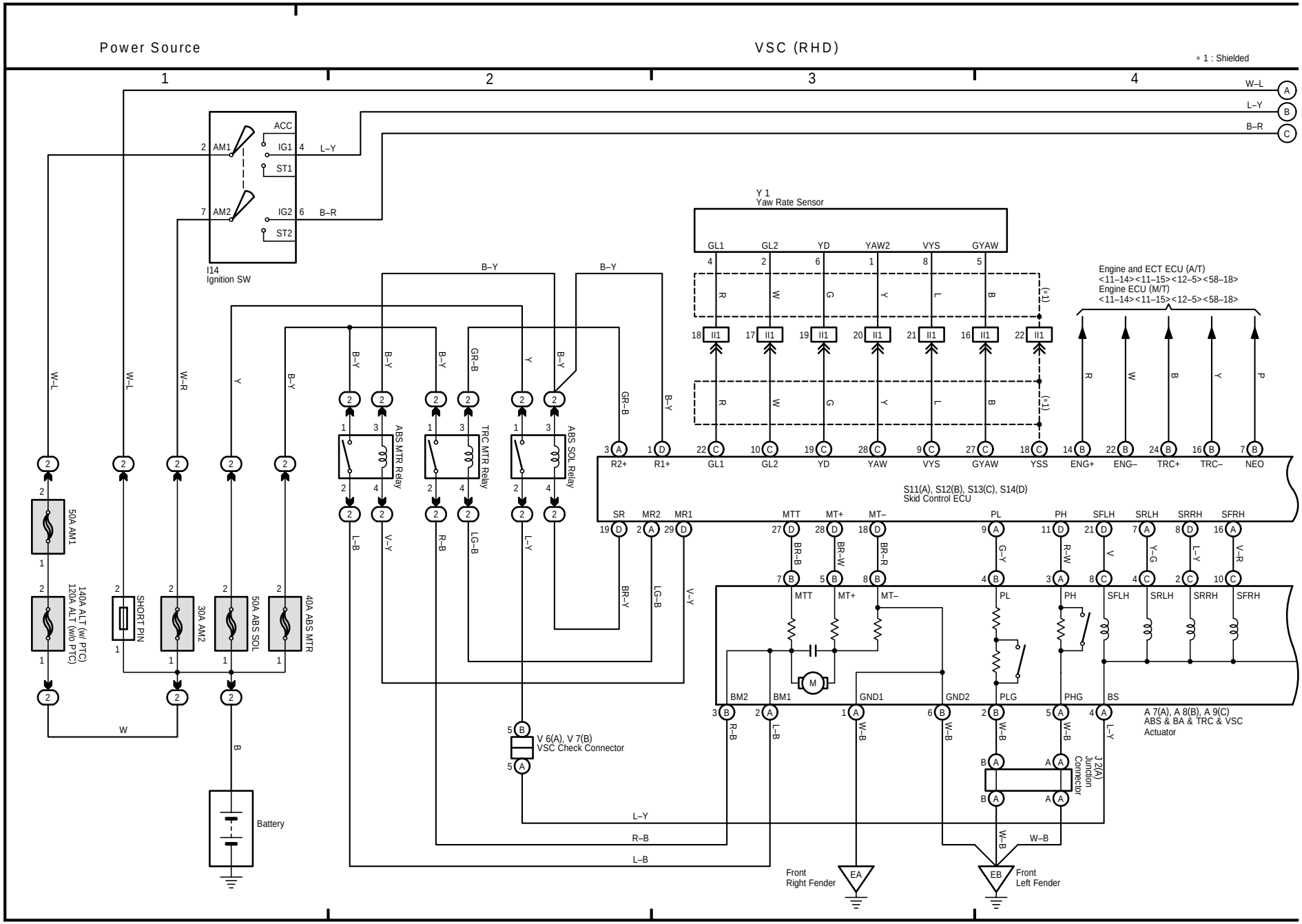

(Cont. next page)

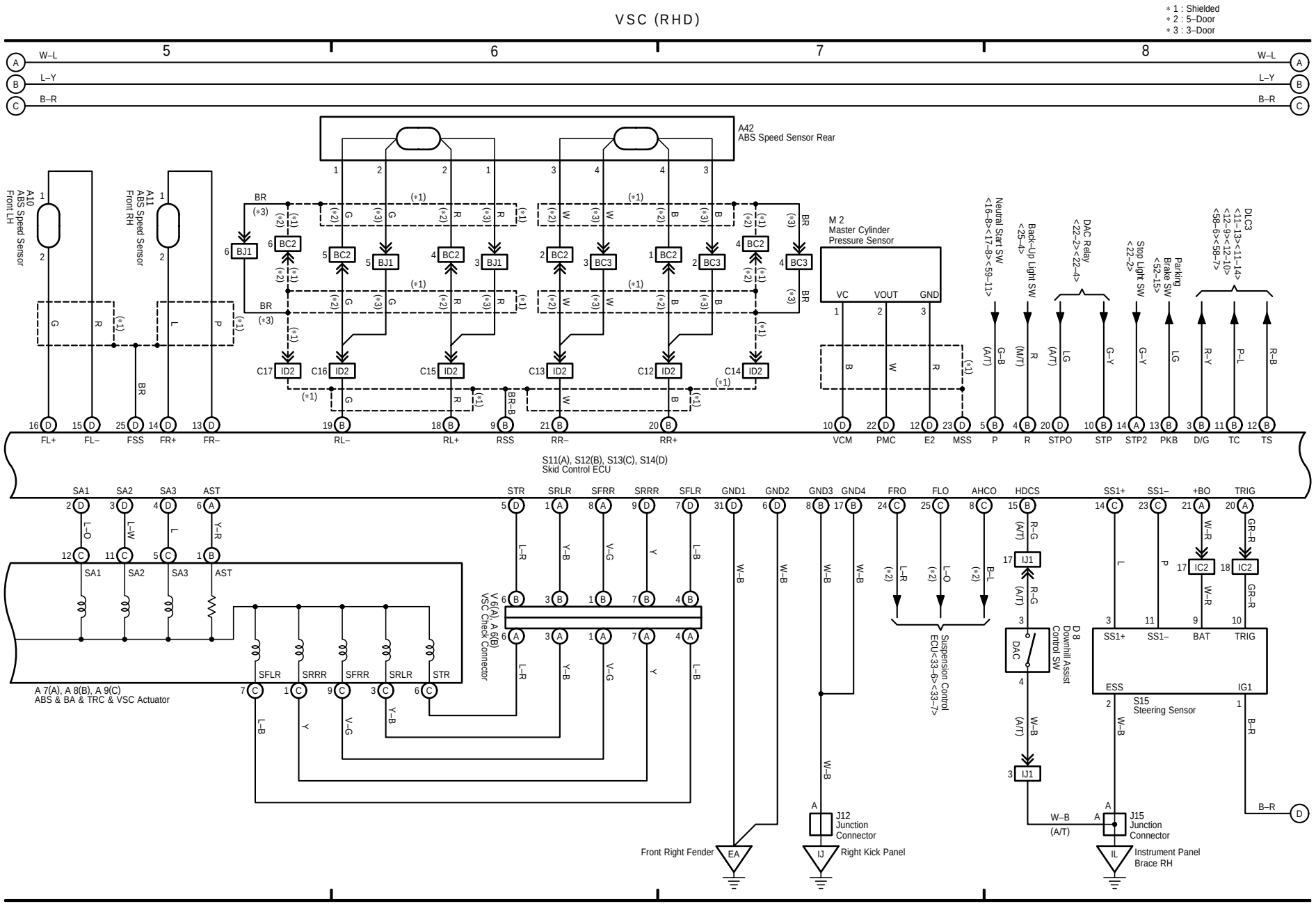

31 LAND CRUISER / LAND CRUISE PRADO (Cont' d)

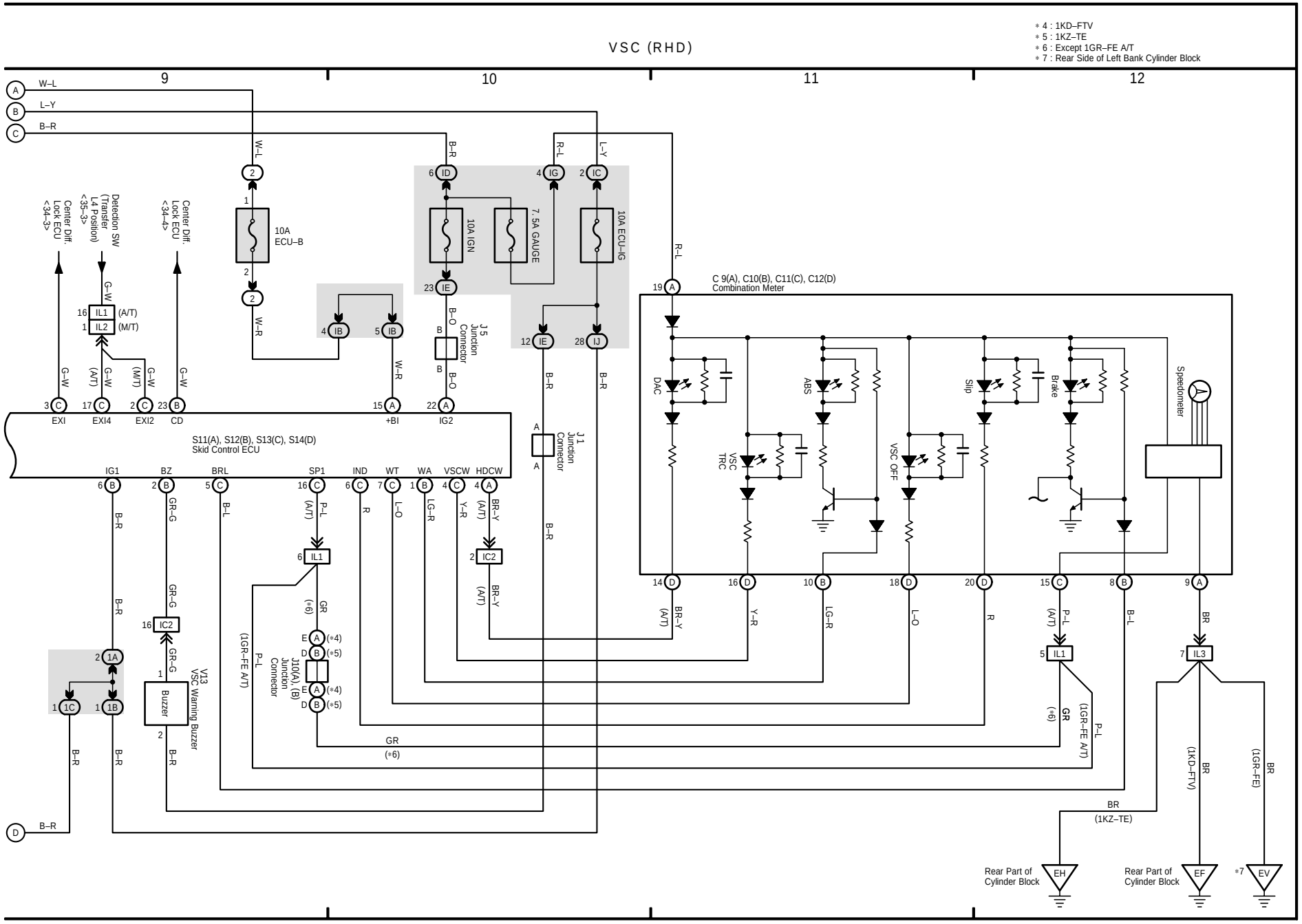

32 LAND CRUISER / LAND CRUISER PRADO

(Cont. next page)

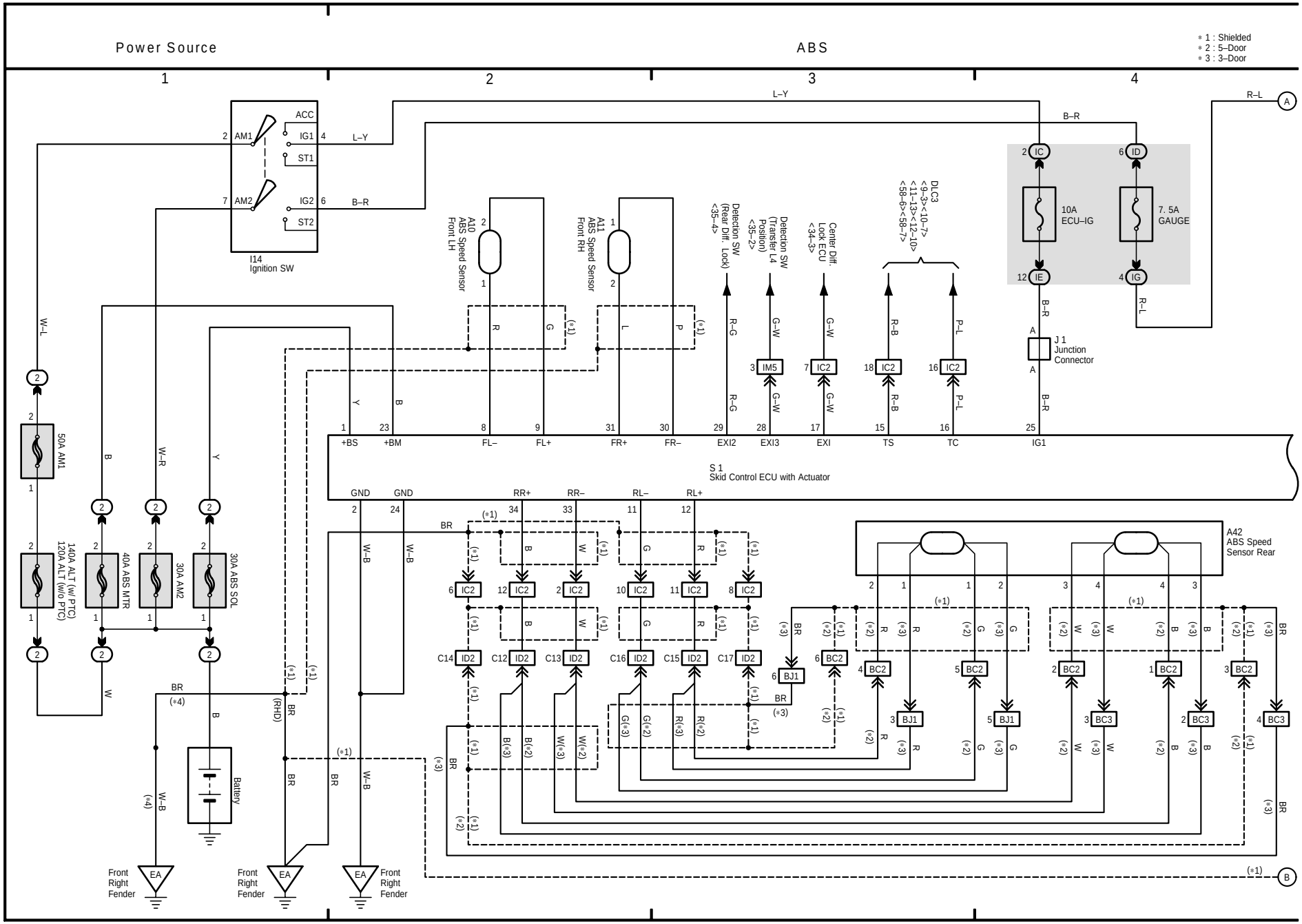

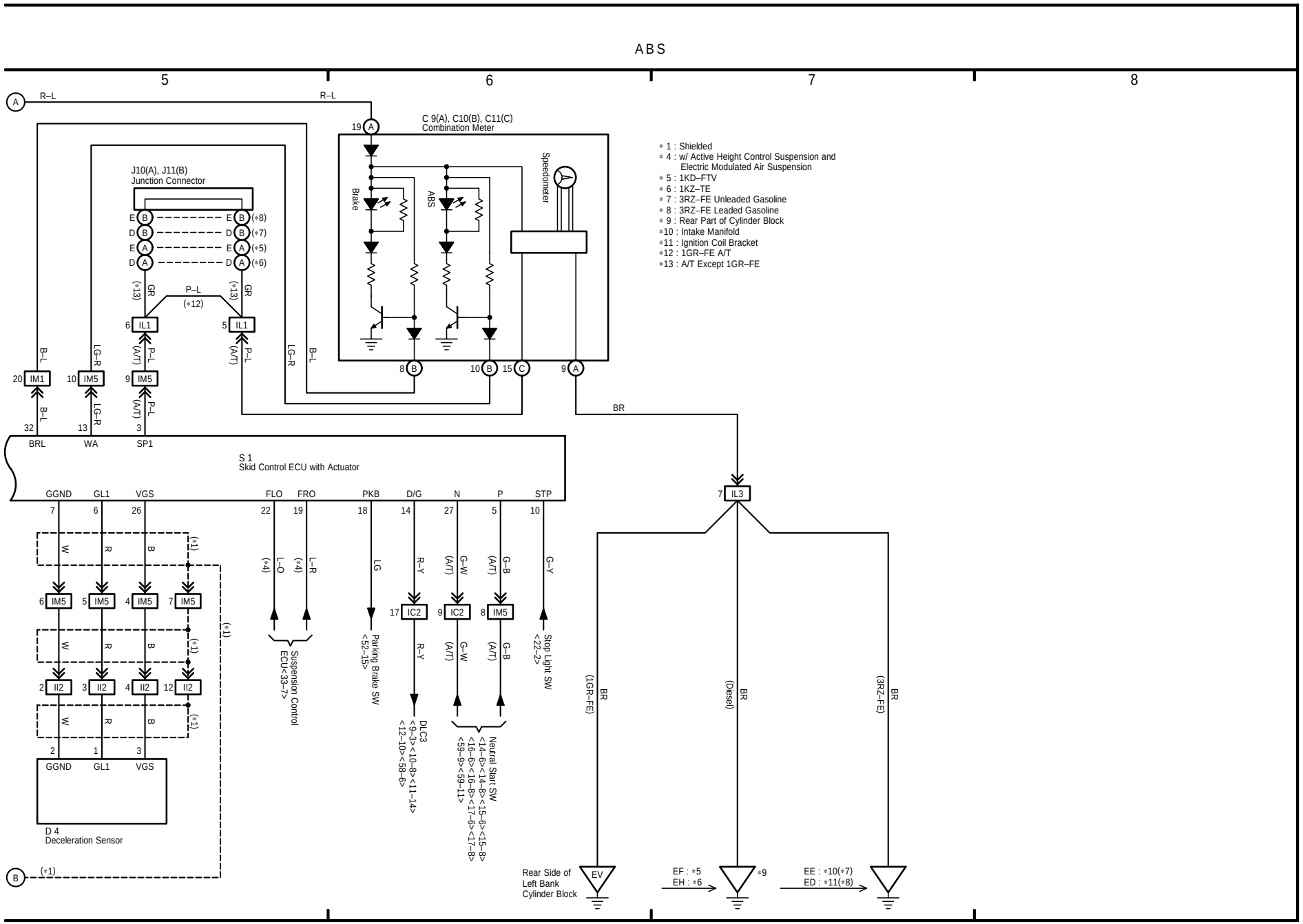
ABS
5
6
7
8
C 9(A), C10(B), C11(C)
Combination Meter
Brake
ABS
Speedometer
J10(A), J11(B)
Junction Connector
∗ 1 : Shielded
∗ 4 : w/ Active Height Control Suspension and Electric Modulated Air Suspension
∗ 5 : 1KD–FTV
∗ 6 : 1KZ–TE
∗ 7 : 3RZ–FE Unleaded Gasoline
∗ 8 : 3RZ–FE Leaded Gasoline
∗ 9 : Rear Part of Cylinder Block
∗10 : Intake Manifold
∗11 : Ignition Coil Bracket
∗12 : 1GR–FE A/T
∗13 : A/T Except 1GR–FE
S 1
Skid Control ECU with Actuator
GGND
GL1
VGS
FLO
FRO
PKB
D/G
N
P
STP
BRL
WA
SP1
D 4
Deceleration Sensor
Suspension Control ECU<33–7>
Parking Brake SW <52–15>
DLC3 <9–3><10–8><11–14><12–10><58–6>
Neutral Start SW <14–6><14–8><15–6><15–8><16–6><16–8><17–6><17–8><59–9><59–11>
Stop Light SW <22–2>
(1GR–FE)
(Diesel)
(3RZ–FE)
Rear Side of Left Bank Cylinder Block
EV
EF : ∗5
EH : ∗6
∗9
EE : ∗10(∗7)
ED : ∗11(∗8)

33 LAND CRUISER / LAND CRUISER PRADO

(Cont. next page)

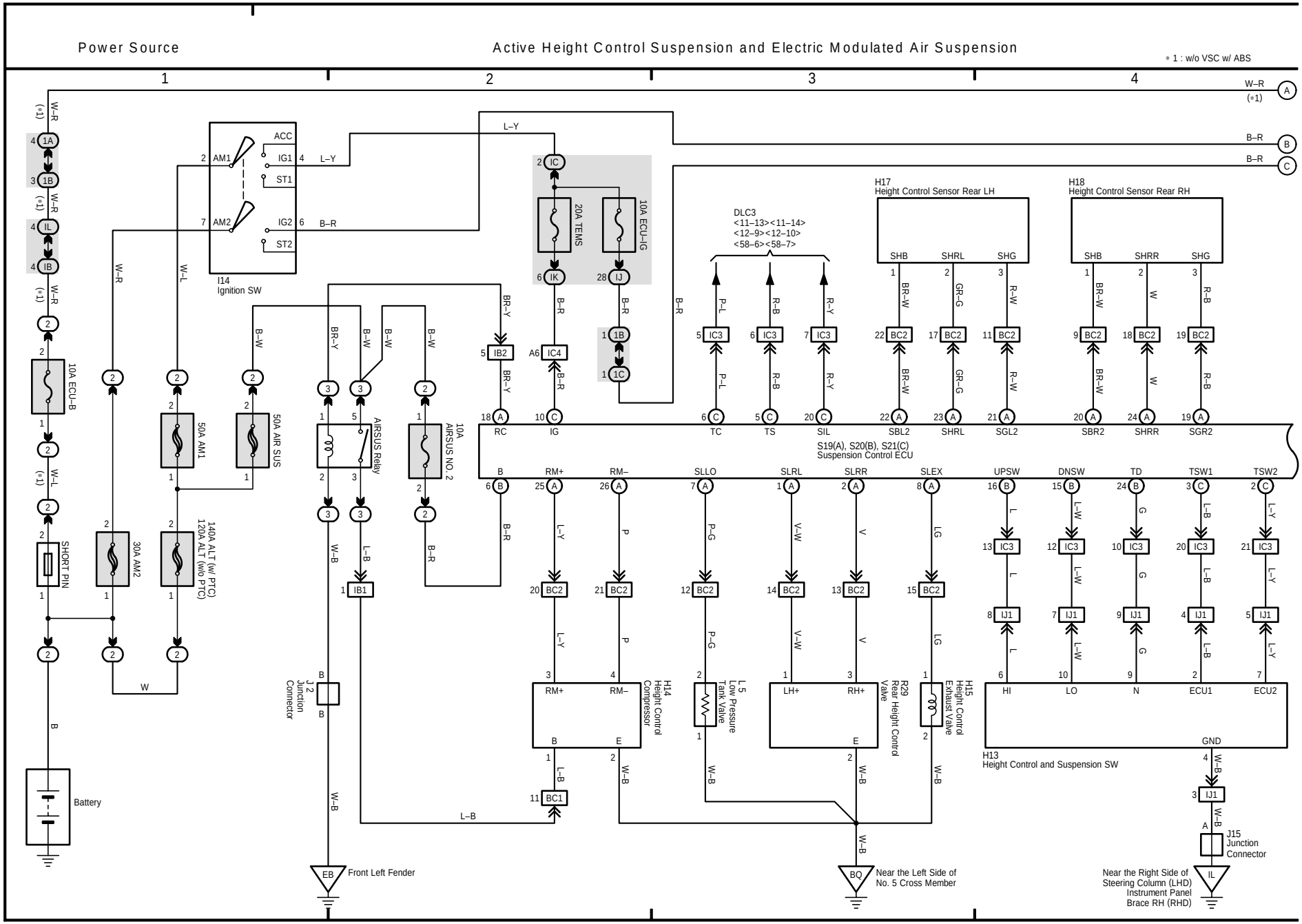

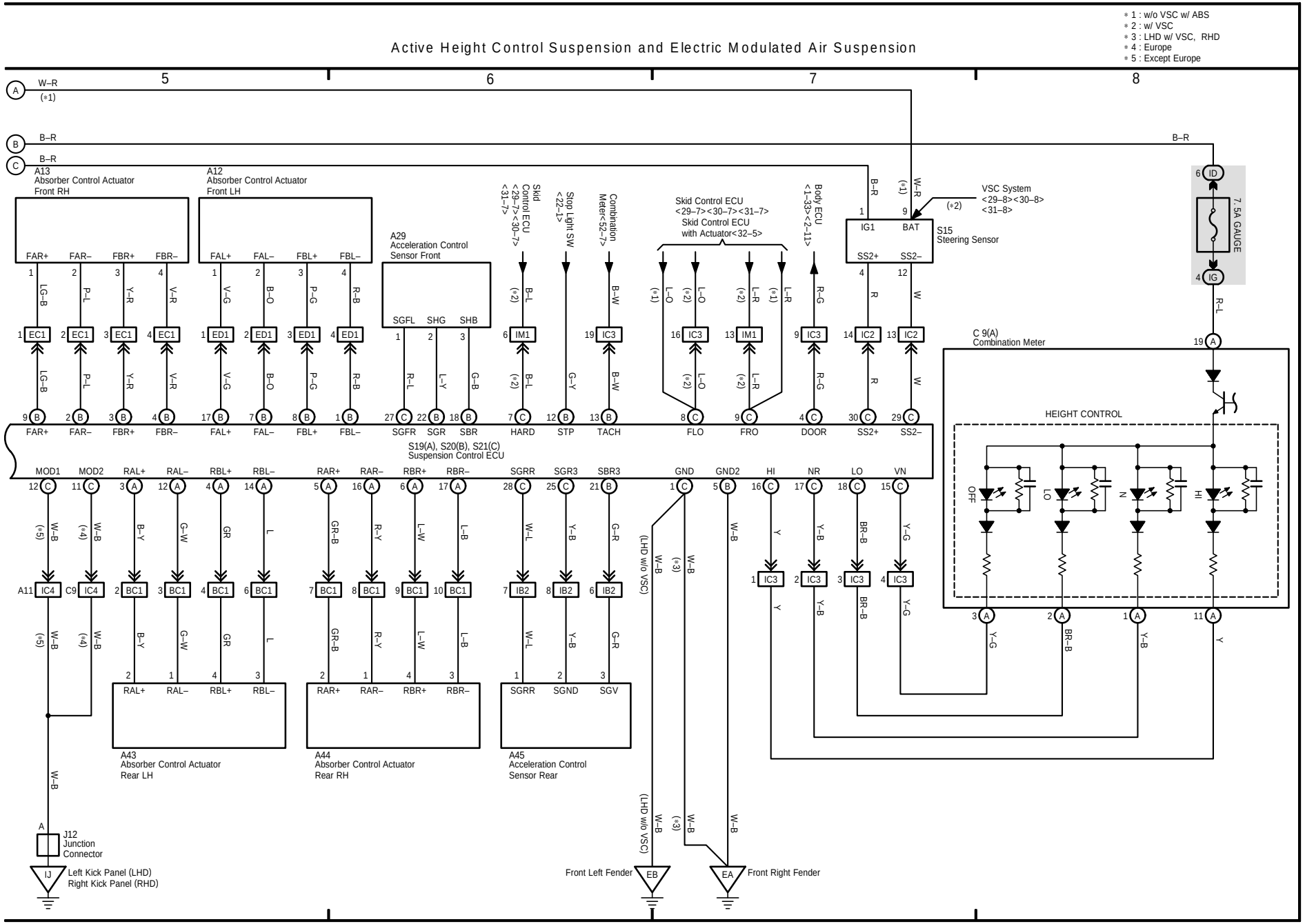
Active Height Control Suspension and Electric Modulated Air Suspension
* 1 : w/o VSC w/ ABS
* 2 : w/ VSC
* 3 : LHD w/ VSC, RHD
* 4 : Europe
* 5 : Except Europe
A13 Absorber Control Actuator Front RH
A12 Absorber Control Actuator Front LH
A29 Acceleration Control Sensor Front
Skid Control ECU <29–7><30–7><31–7>
Stop Light SW <22–1>
Combination Meter<52–7>
Skid Control ECU <29–7><30–7><31–7> Skid Control ECU with Actuator<32–5>
Body ECU <1–33><2–11>
VSC System <29–8><30–8><31–8>
S15 Steering Sensor
7.5A GAUGE
C 9(A) Combination Meter
HEIGHT CONTROL
S19(A), S20(B), S21(C) Suspension Control ECU
A43 Absorber Control Actuator Rear LH
A44 Absorber Control Actuator Rear RH
A45 Acceleration Control Sensor Rear
J12 Junction Connector
Left Kick Panel (LHD) Right Kick Panel (RHD)
Front Left Fender
Front Right Fender

34 LAND CRUISER / LAND CRUISER PRADO

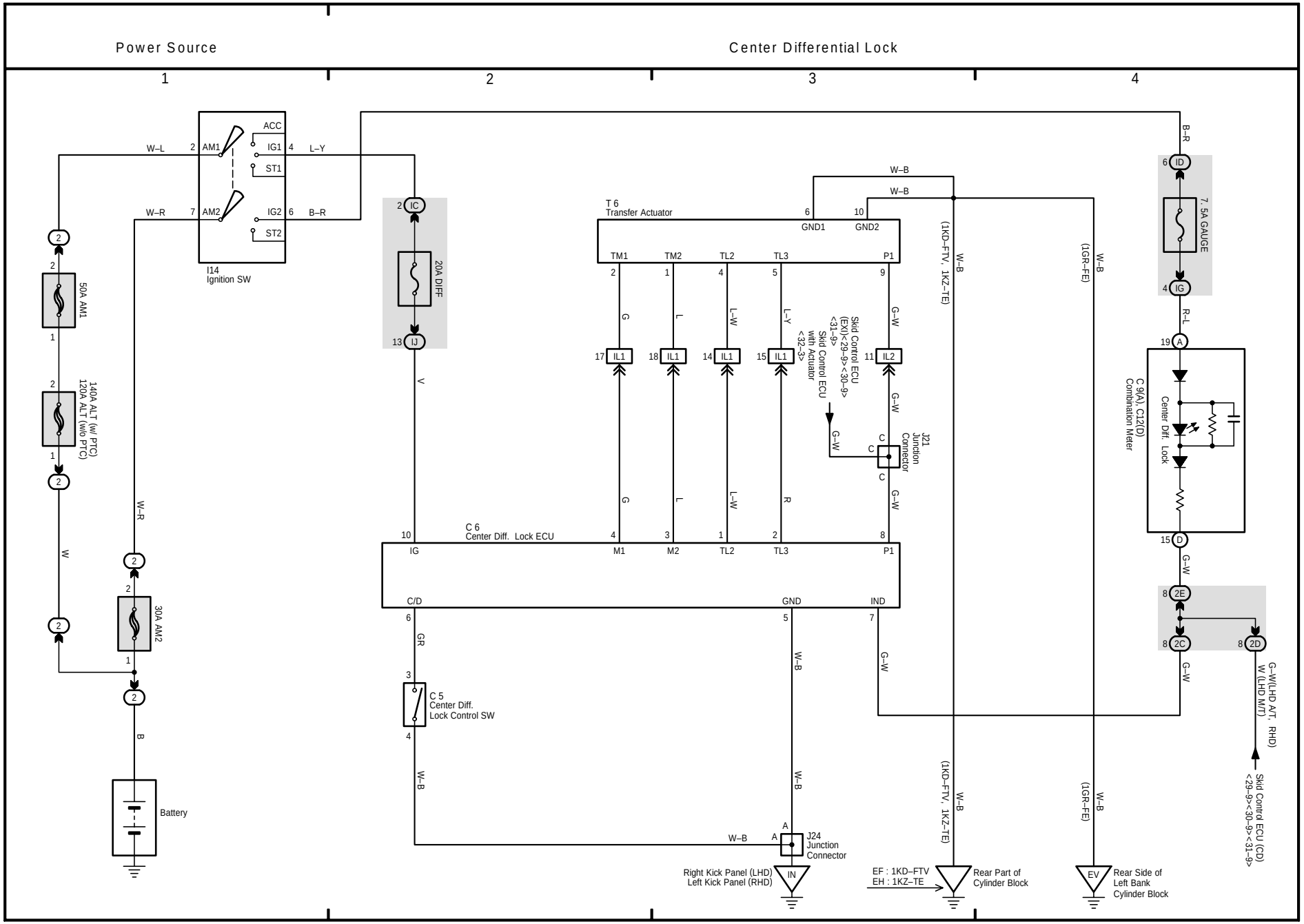

35 LAND CRUISER / LAND CRUISER PRADO

(Cont. next page)

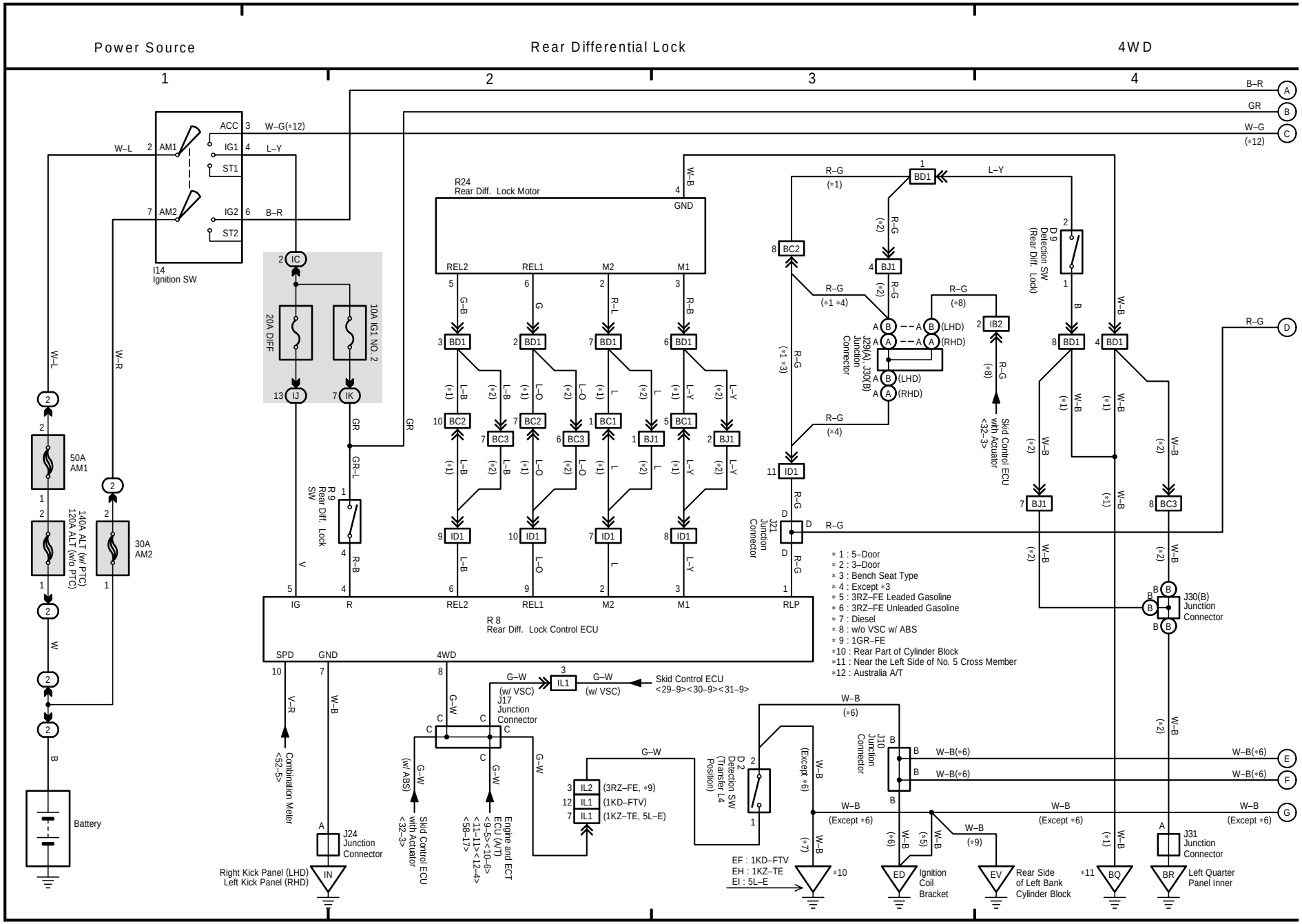

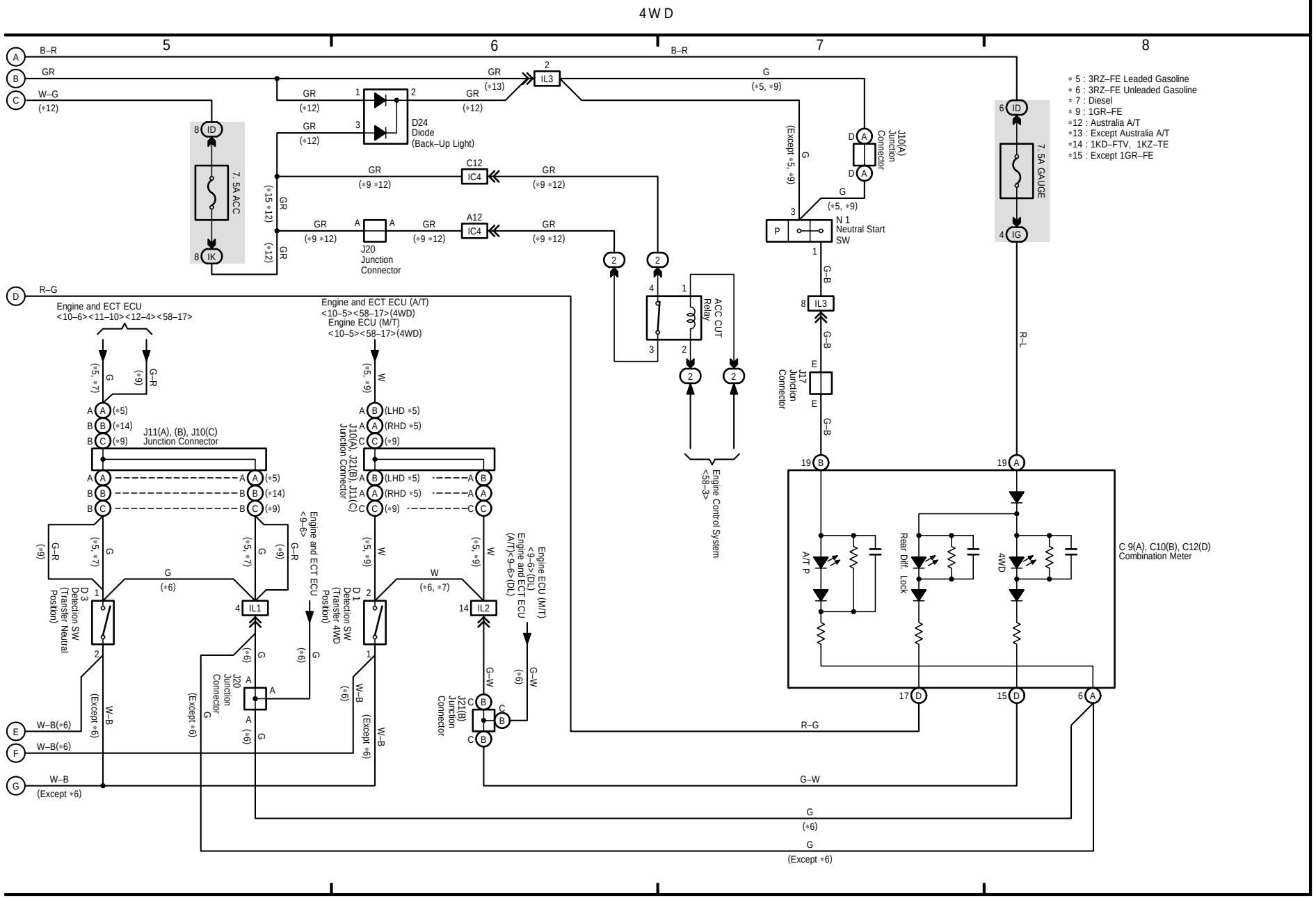
4WD
5
6
7
8
B–R
GR
W–G
(*12)
D24
Diode
(Back–Up Light)
7. 5A ACC
IL3
C12
IC4
A12
J20
Junction
Connector
J10(A)
Junction
Connector
N 1
Neutral Start
SW
ACC CUT
Relay
J17
Junction
Connector
7. 5A GAUGE
R–L
R–G
Engine and ECT ECU
<10–6><11–10><12–4><58–17>
Engine and ECT ECU (A/T)
<10–5><58–17>(4WD)
Engine ECU (M/T)
<10–5><58–17>(4WD)
J11(A), (B), J10(C)
Junction Connector
J10(A), J21(B), J11(C)
Junction Connector
Engine Control System
<58–3>
Engine and ECT ECU
<9–6>
Engine ECU (M/T)
<9–6>(DL)
Engine and ECT ECU
(A/T)<9–6>(DL)
D 3
Detection SW
(Transfer Neutral
Position)
D 1
Detection SW
(Transfer 4WD
Position)
IL1
IL2
J20
Junction
Connector
J21(B)
Junction
Connector
A/T P
Rear Diff. Lock
4WD
C 9(A), C10(B), C12(D)
Combination Meter
W–B(*6)
W–B
(Except *6)
G–W
G
(*6)
G
(Except *6)
* 5 : 3RZ–FE Leaded Gasoline
* 6 : 3RZ–FE Unleaded Gasoline
* 7 : Diesel
* 9 : 1GR–FE
*12 : Australia A/T
*13 : Except Australia A/T
*14 : 1KD–FTV, 1KZ–TE
*15 : Except 1GR–FE

36 LAND CRUISER / LAND CRUISER PRADO

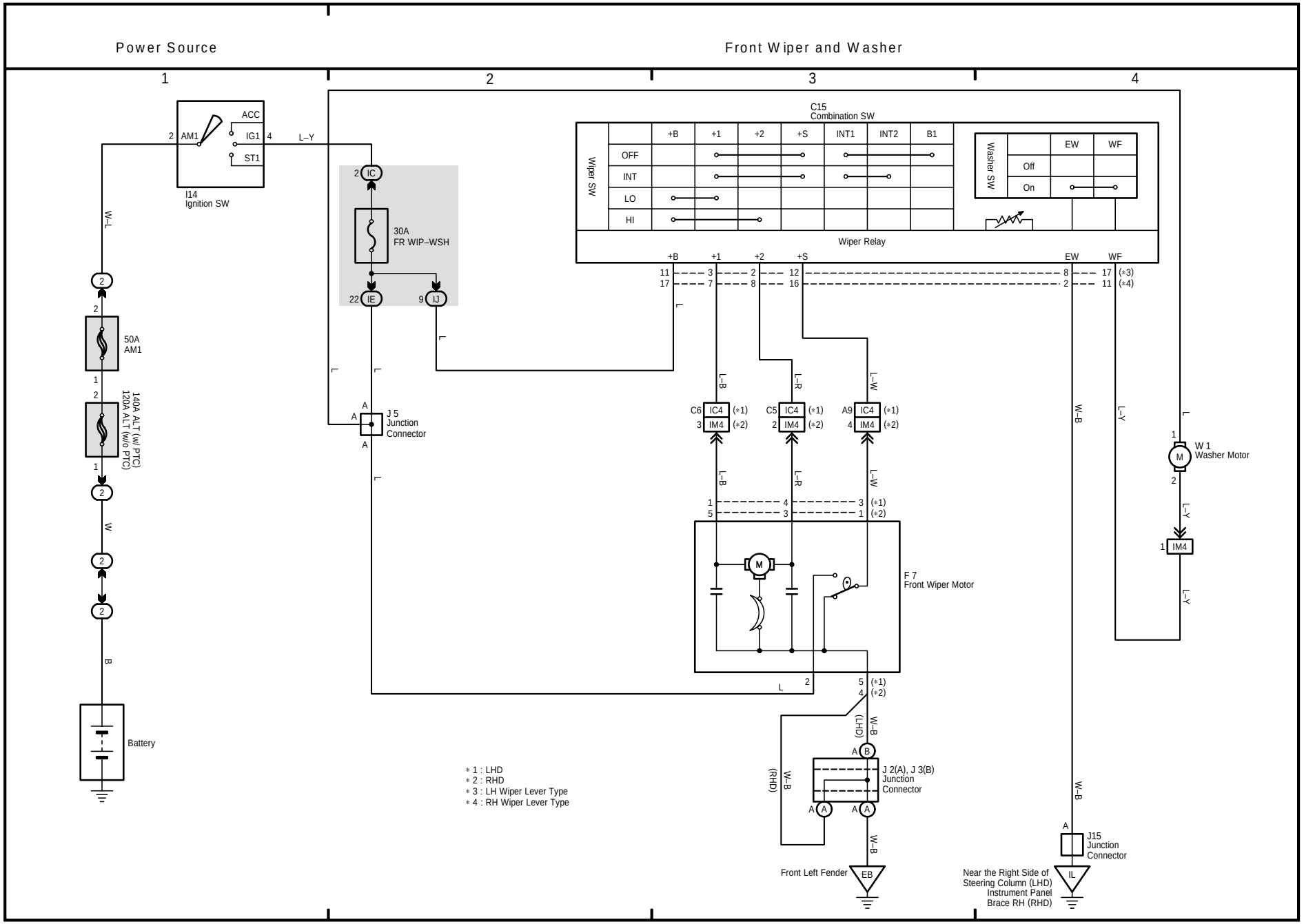

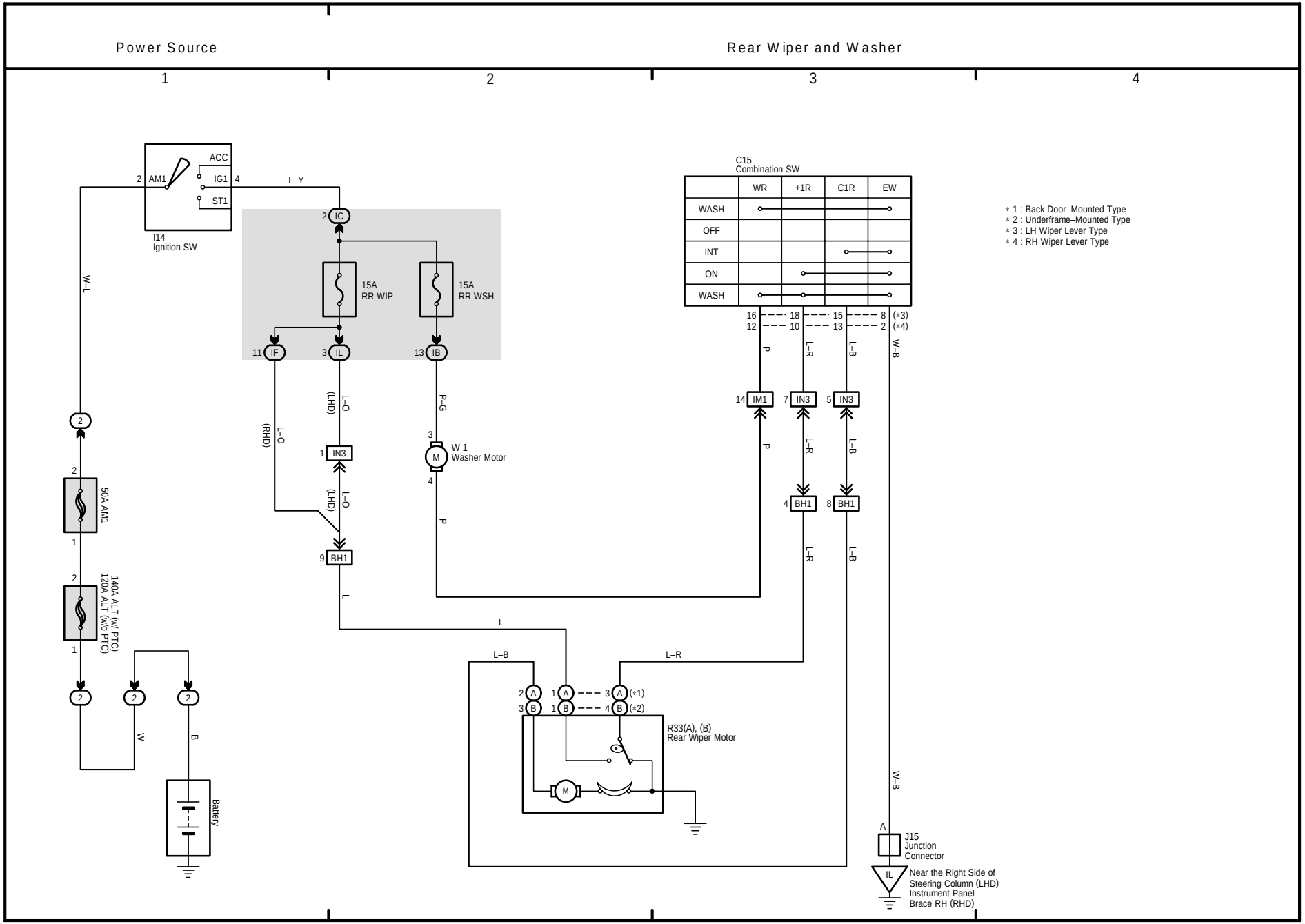
Power Source
Rear Wiper and Washer
1
2
3
4
ACC
IG1
ST1
AM1
I14
Ignition SW
L–Y
W–L
IC
15A
RR WIP
15A
RR WSH
IF
IL
IB
(LHD)
(RHD)
L–O
P–G
IN3
W 1
Washer Motor
BH1
50A AM1
140A ALT (w/ PTC)
120A ALT (w/o PTC)
L
W
B
Battery
L–B
L–R
P
W–B
C15
Combination SW
WR
+1R
C1R
EW
WASH
OFF
INT
ON
WASH
IM1
(∗3)
(∗4)
∗ 1 : Back Door–Mounted Type
∗ 2 : Underframe–Mounted Type
∗ 3 : LH Wiper Lever Type
∗ 4 : RH Wiper Lever Type
(∗1)
(∗2)
R33(A), (B)
Rear Wiper Motor
J15
Junction
Connector
Near the Right Side of
Steering Column (LHD)
Instrument Panel
Brace RH (RHD)

38 LAND CRUISER / LAND CRUISER PRADO

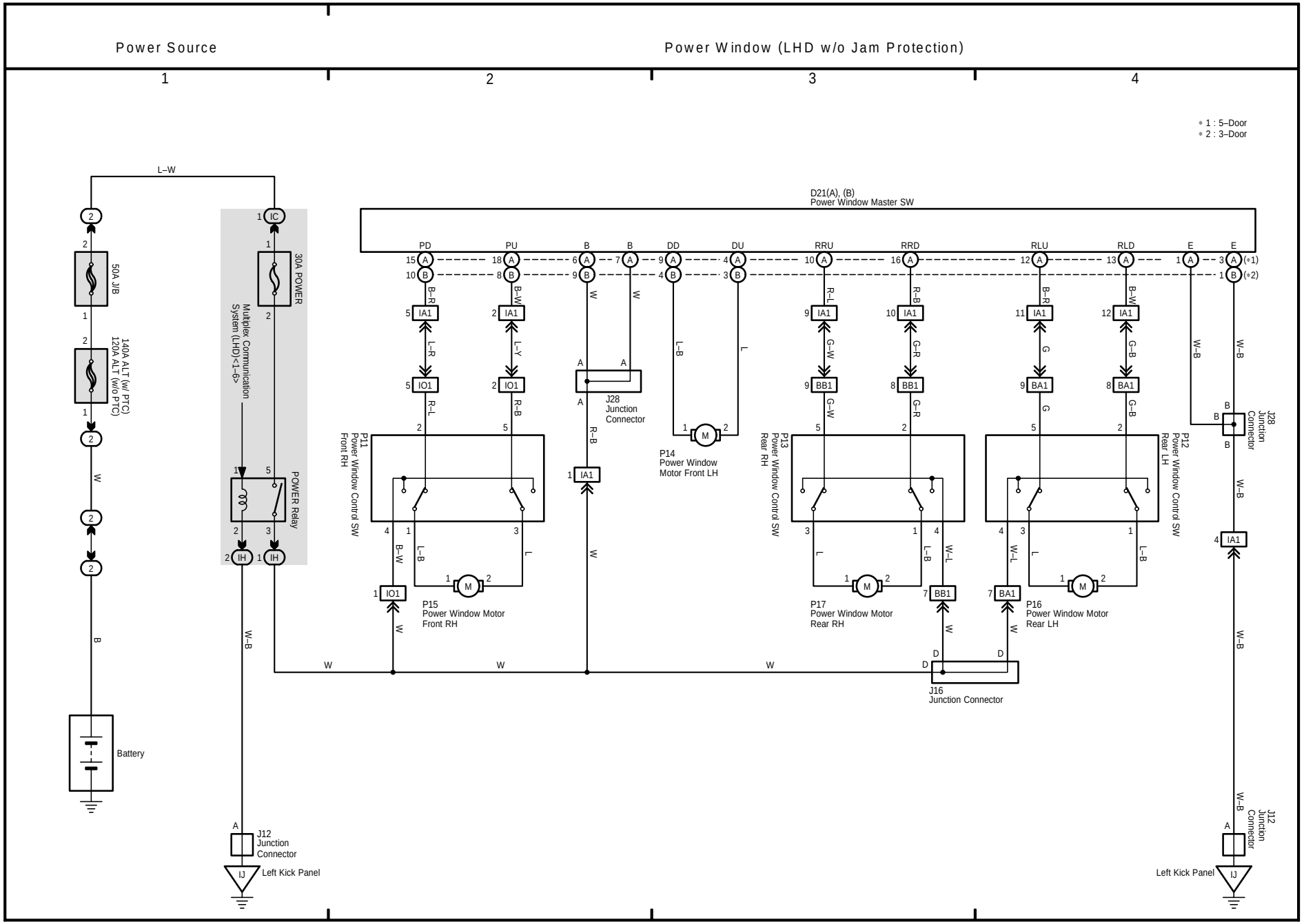

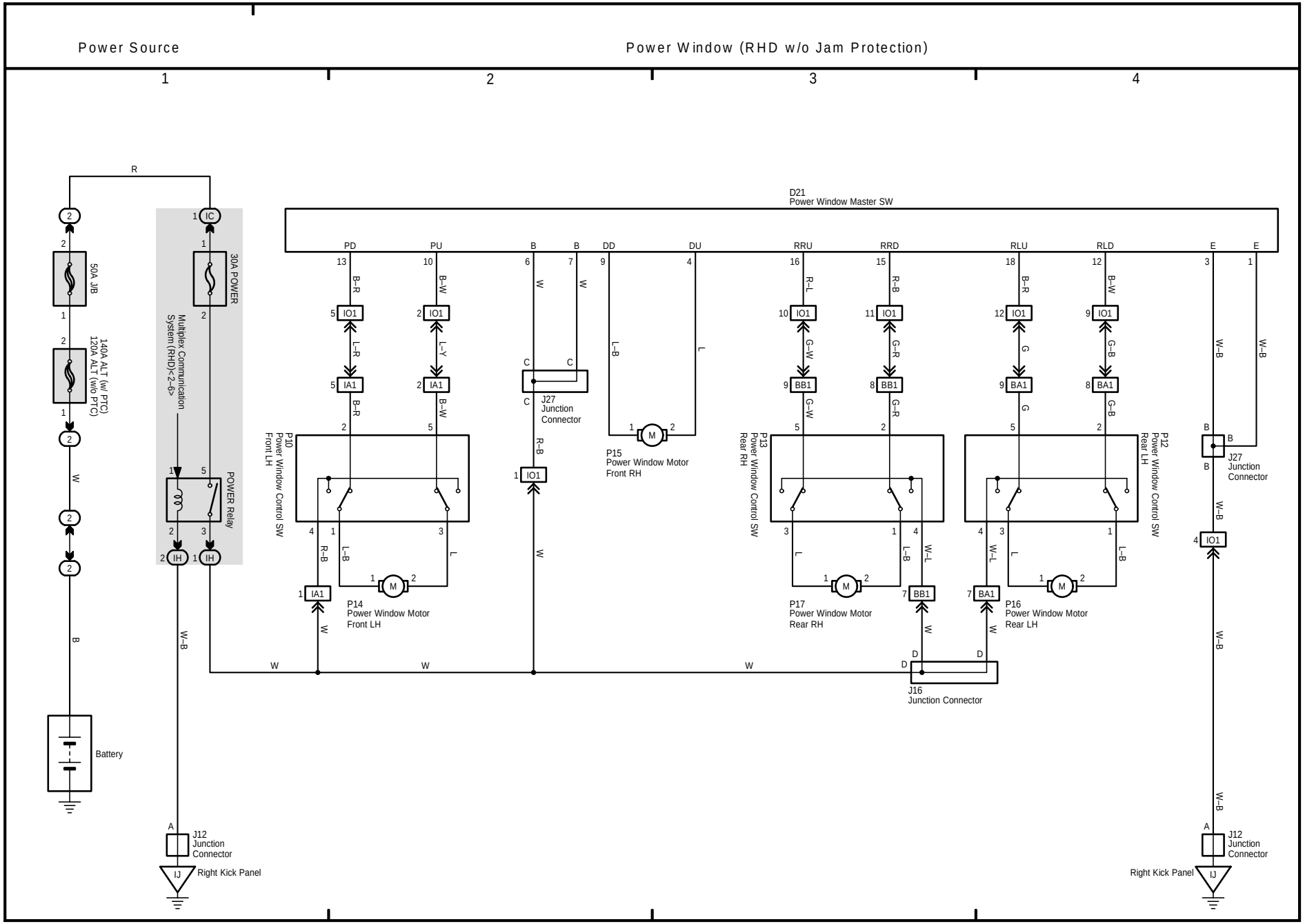
Power Source
Power Window (RHD w/o Jam Protection)
1
2
3
4
R
50A J/B
140A ALT (w/ PTC)
120A ALT (w/o PTC)
W
B
Battery
Multiplex Communication System (RHD)<2-6>
30A POWER
POWER Relay
IC
IH
W-B
J12 Junction Connector
Right Kick Panel
IJ
D21
Power Window Master SW
PD
PU
B
DD
DU
RRU
RRD
RLU
RLD
E
IO1
IA1
BB1
BA1
B-R
B-W
L-R
L-Y
R-B
G-W
G-R
G
G-B
L-B
L
W-L
P10
Power Window Control SW
Front LH
P14
Power Window Motor
Front LH
J27
Junction Connector
P15
Power Window Motor
Front RH
P13
Power Window Control SW
Rear RH
P17
Power Window Motor
Rear RH
P12
Power Window Control SW
Rear LH
P16
Power Window Motor
Rear LH
J16
Junction Connector
M

40 LAND CRUISER / LAND CRUISER PRADO

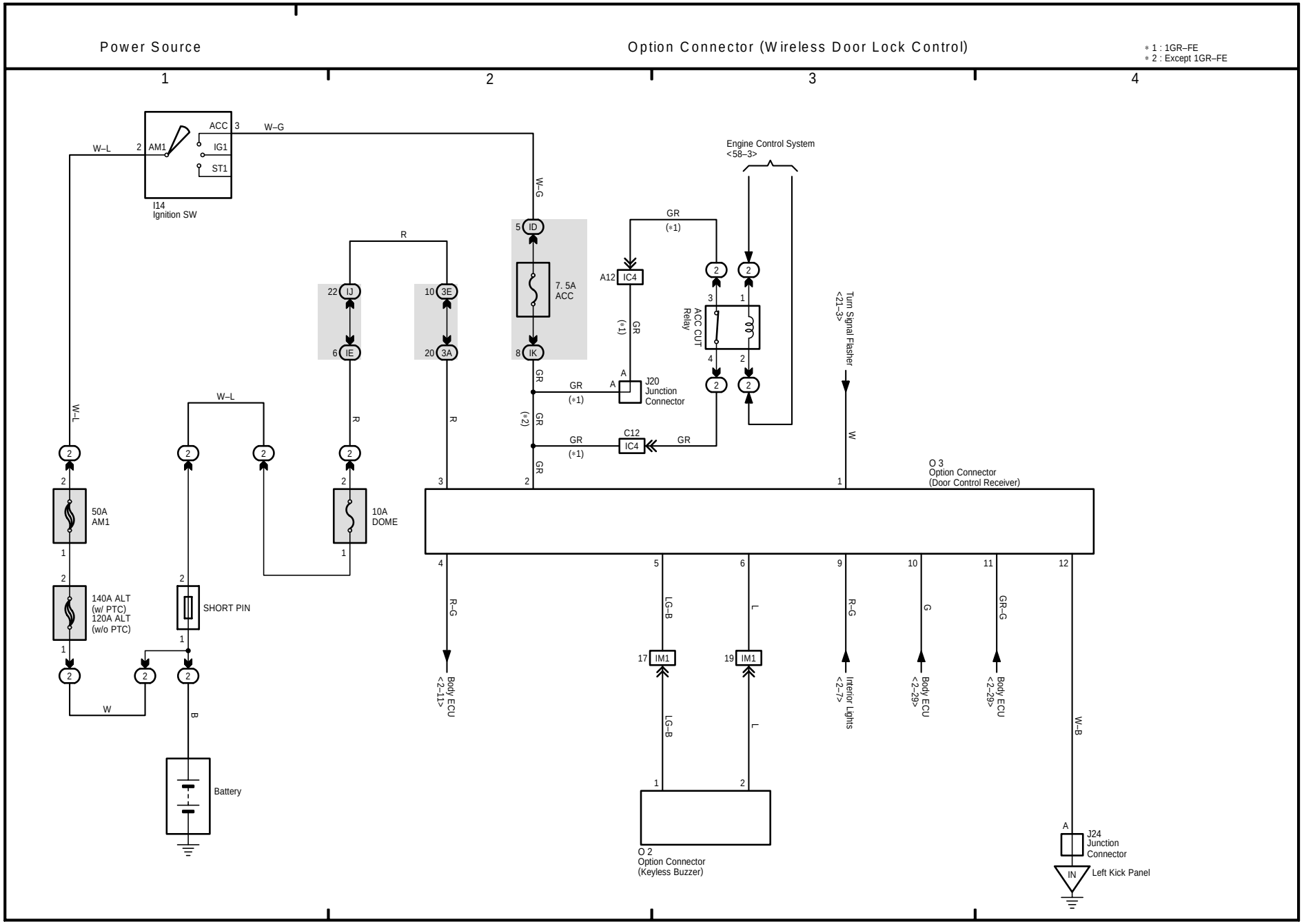

41 LAND CRUISER / LAND CRUISER PRADO

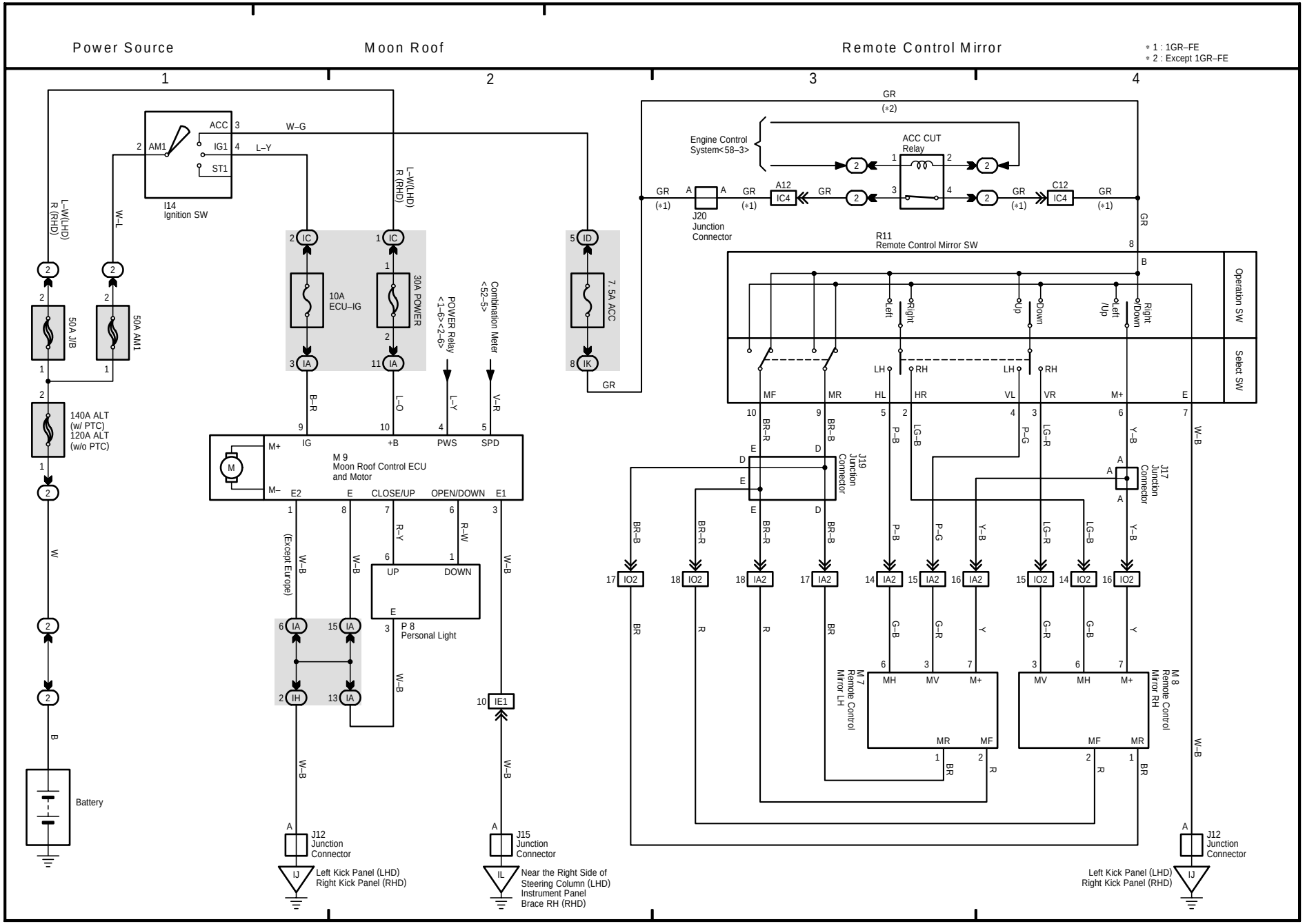

42 LAND CRUISER / LAND CRUISER PRADO

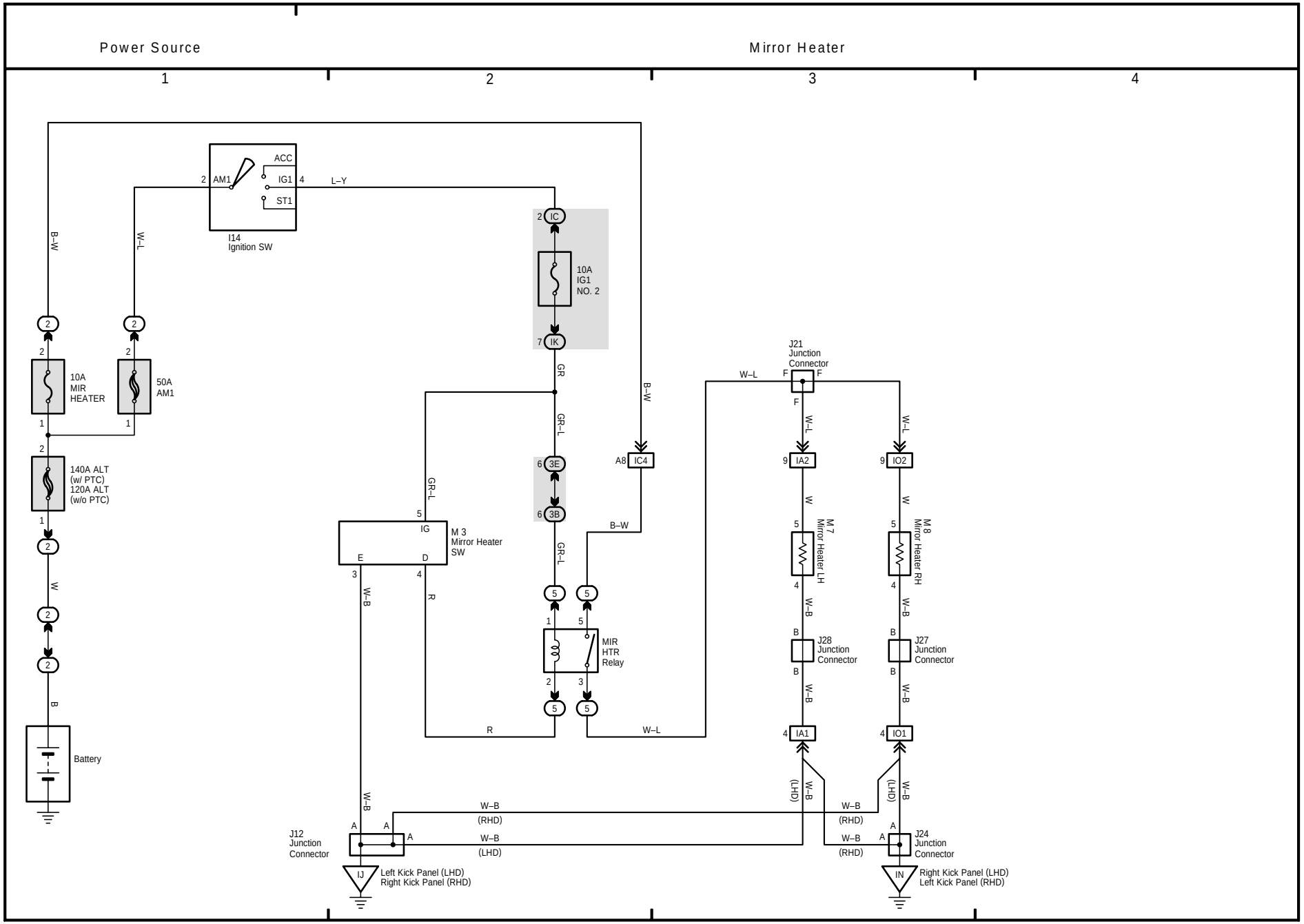

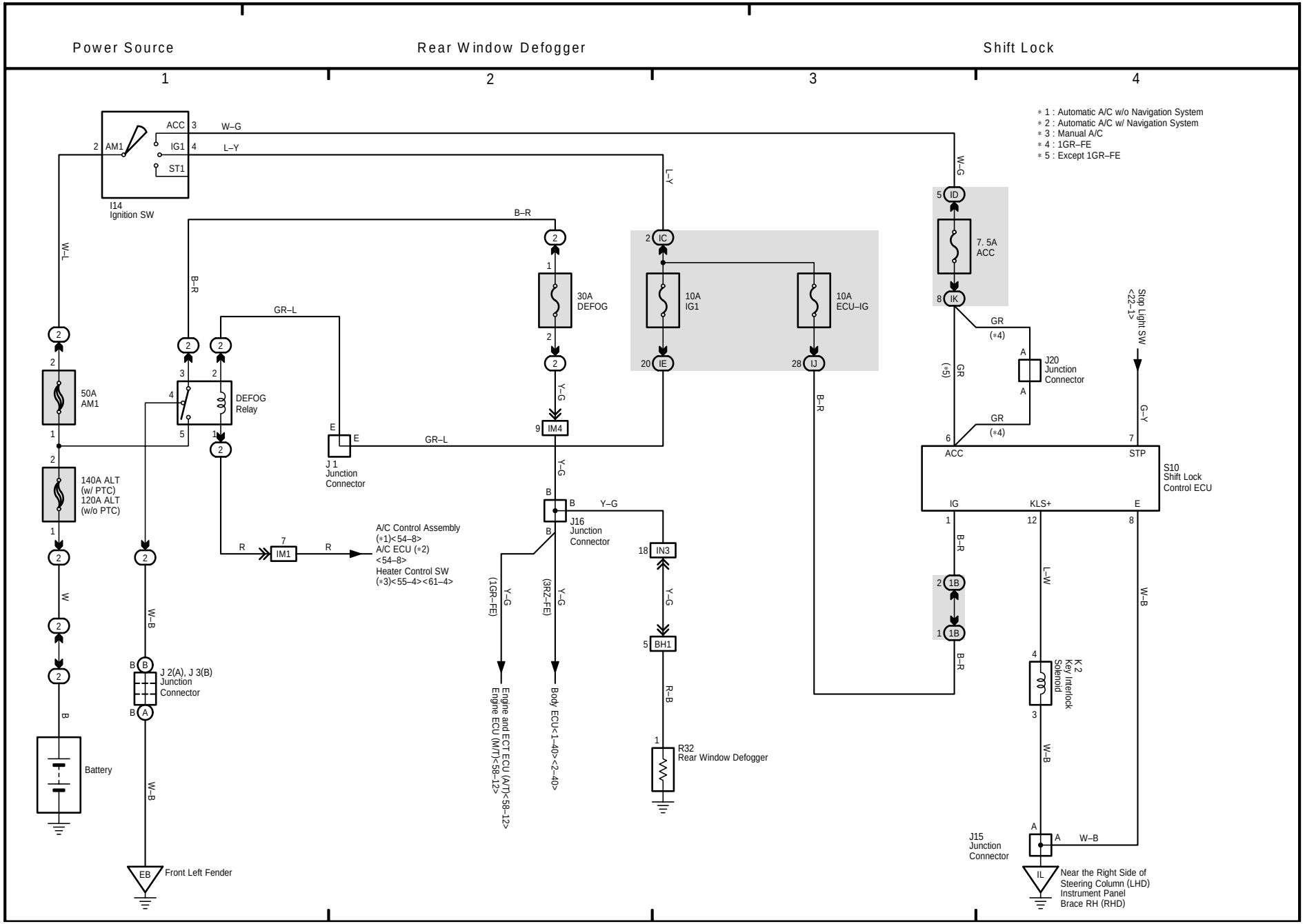
Power Source
Rear Window Defogger
Shift Lock
1
2
3
4
∗1 : Automatic A/C w/o Navigation System
∗2 : Automatic A/C w/ Navigation System
∗3 : Manual A/C
∗4 : 1GR–FE
∗5 : Except 1GR–FE
I14
Ignition SW
ACC
IG1
ST1
AM1
W–G
L–Y
W–L
B–R
GR–L
Y–G
50A
AM1
140A ALT
(w/ PTC)
120A ALT
(w/o PTC)
DEFOG
Relay
30A
DEFOG
IM4
J 1
Junction
Connector
J16
Junction
Connector
IM1
A/C Control Assembly
(∗1)<54–8>
A/C ECU (∗2)
<54–8>
Heater Control SW
(∗3)<55–4><61–4>
IN3
BH1
R–B
R32
Rear Window Defogger
Engine and ECT ECU (A/T)<58–12>
Engine ECU (M/T)<58–12>
(1GR–FE)
Body ECU<1–40><2–40>
(3RZ–FE)
10A
IG1
10A
ECU–IG
IC
IE
IJ
7. 5A
ACC
ID
IK
GR
(∗4)
(∗5)
J20
Junction
Connector
Stop Light SW
<22–1>
G–Y
S10
Shift Lock
Control ECU
ACC
STP
IG
KLS+
E
1B
L–W
W–B
K 2
Key Interlock
Solenoid
J15
Junction
Connector
IL
Near the Right Side of
Steering Column (LHD)
Instrument Panel
Brace RH (RHD)
Battery
J 2(A), J 3(B)
Junction
Connector
EB
Front Left Fender

44 LAND CRUISER / LAND CRUISER PRADO

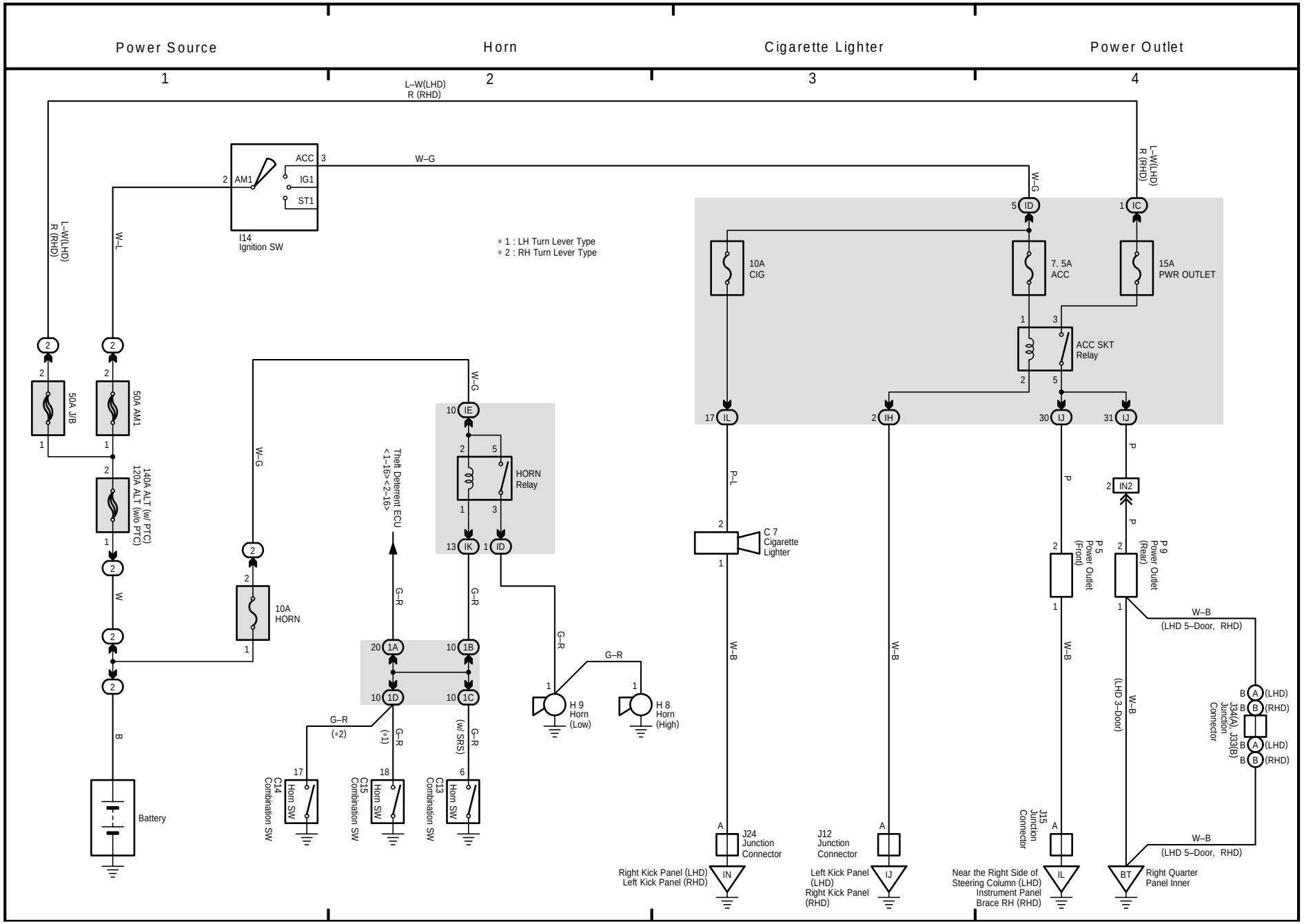

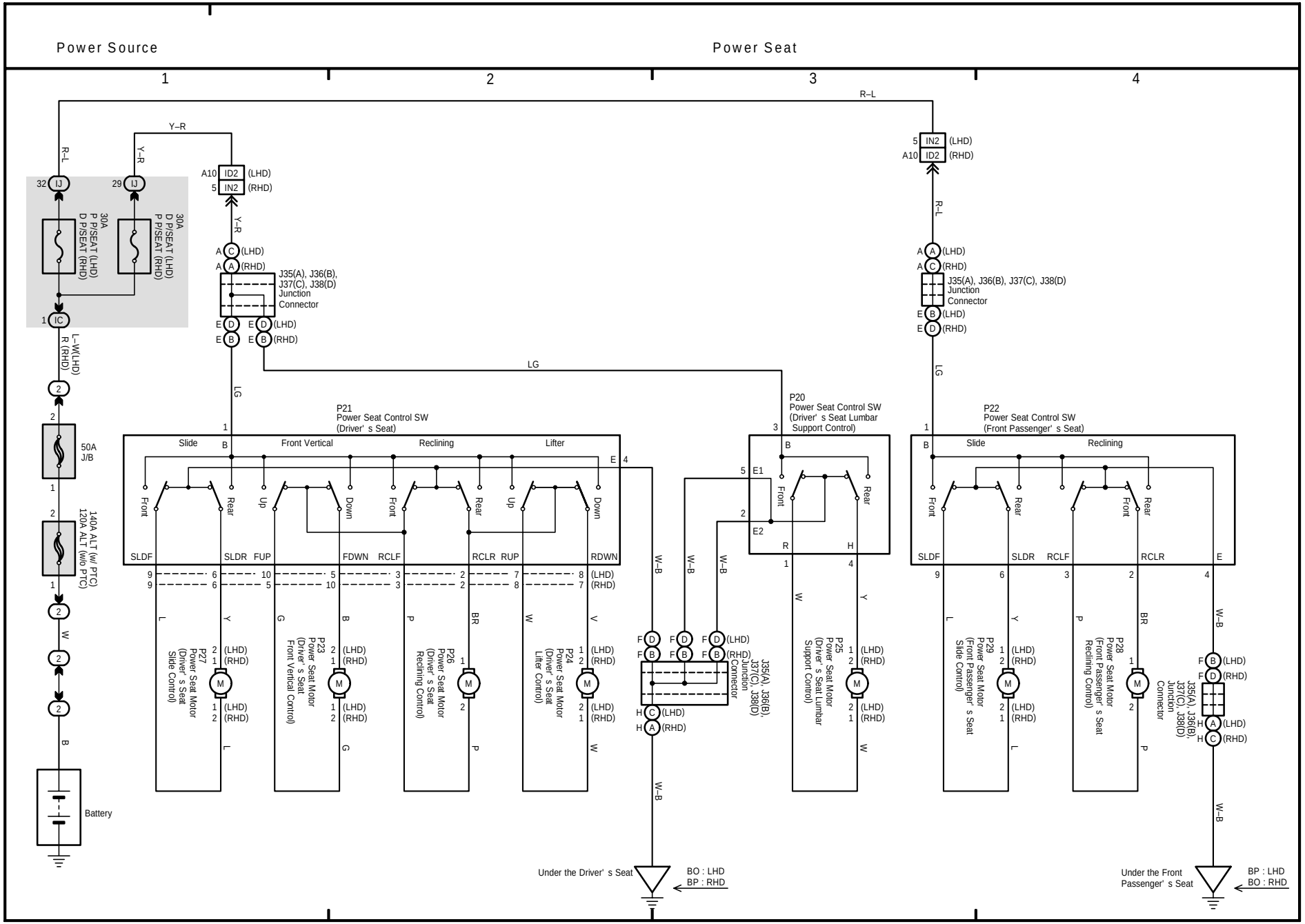
Power Source
Power Seat
1
2
3
4
R–L
Y–R
32 IJ
29 IJ
30A D P/SEAT (LHD) P P/SEAT (RHD)
30A P P/SEAT (LHD) D P/SEAT (RHD)
1 IC
L–W(LHD) R (RHD)
50A J/B
140A ALT (w/ PTC) 120A ALT (w/o PTC)
Battery
A10 ID2 (LHD)
5 IN2 (RHD)
A C (LHD)
A A (RHD)
J35(A), J36(B), J37(C), J38(D) Junction Connector
E D (LHD)
E B (RHD)
LG
P21 Power Seat Control SW (Driver' s Seat)
Slide
Front Vertical
Reclining
Lifter
Front
Rear
Up
Down
SLDF
SLDR
FUP
FDWN
RCLF
RCLR
RUP
RDWN
P27 Power Seat Motor (Driver' s Seat Slide Control)
P23 Power Seat Motor (Driver' s Seat Front Vertical Control)
P26 Power Seat Motor (Driver' s Seat Reclining Control)
P24 Power Seat Motor (Driver' s Seat Lifter Control)
W–B
F D (LHD)
F B (RHD)
H C (LHD)
H A (RHD)
Under the Driver' s Seat
BO : LHD
BP : RHD
P20 Power Seat Control SW (Driver' s Seat Lumbar Support Control)
E1
E2
P25 Power Seat Motor (Driver' s Seat Lumbar Support Control)
5 IN2 (LHD)
A10 ID2 (RHD)
A A (LHD)
A C (RHD)
E B (LHD)
E D (RHD)
P22 Power Seat Control SW (Front Passenger' s Seat)
P29 Power Seat Motor (Front Passenger' s Seat Slide Control)
P28 Power Seat Motor (Front Passenger' s Seat Reclining Control)
Under the Front Passenger' s Seat
BP : LHD
BO : RHD

46 LAND CRUISER / LAND CRUISER PRADO

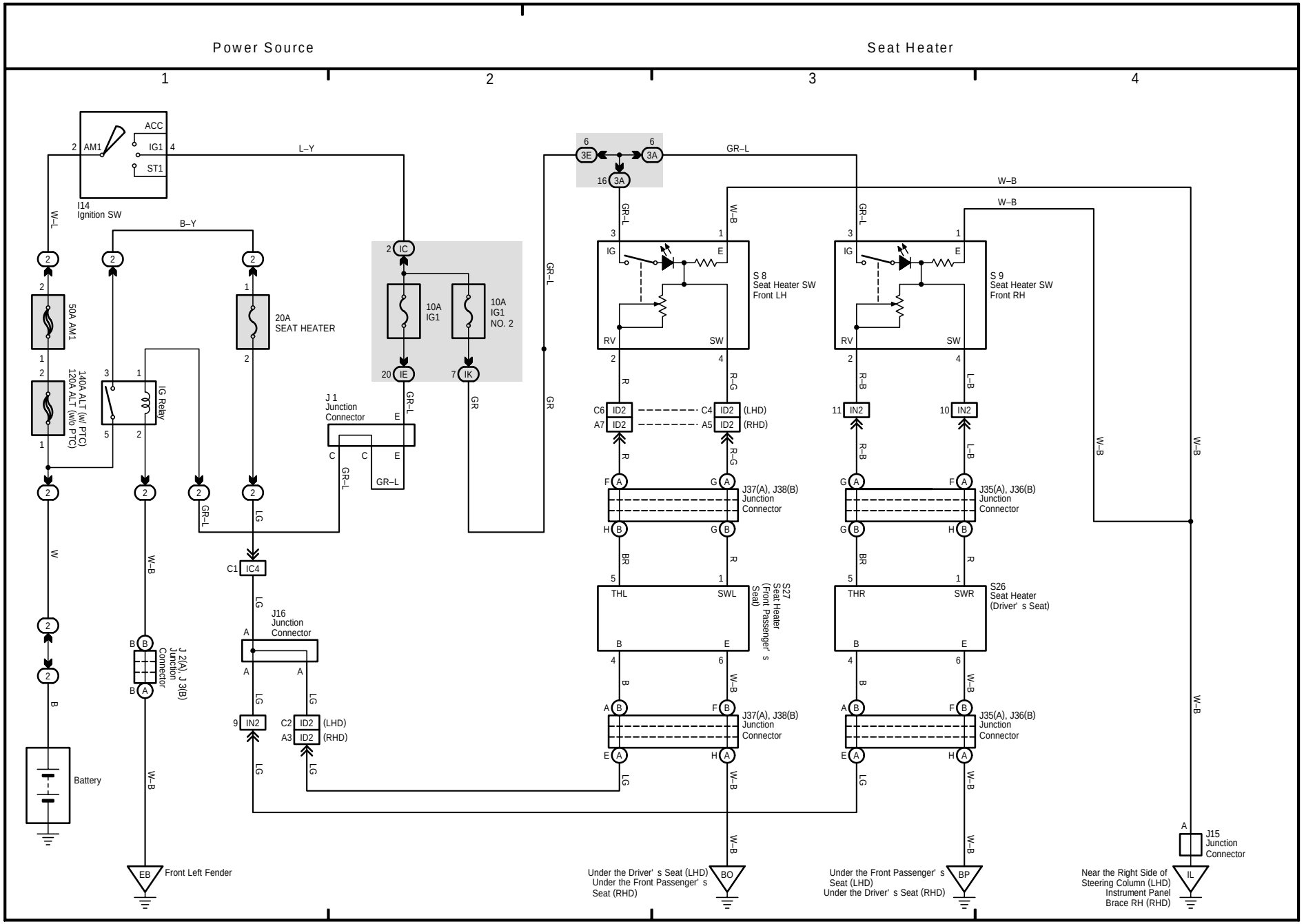

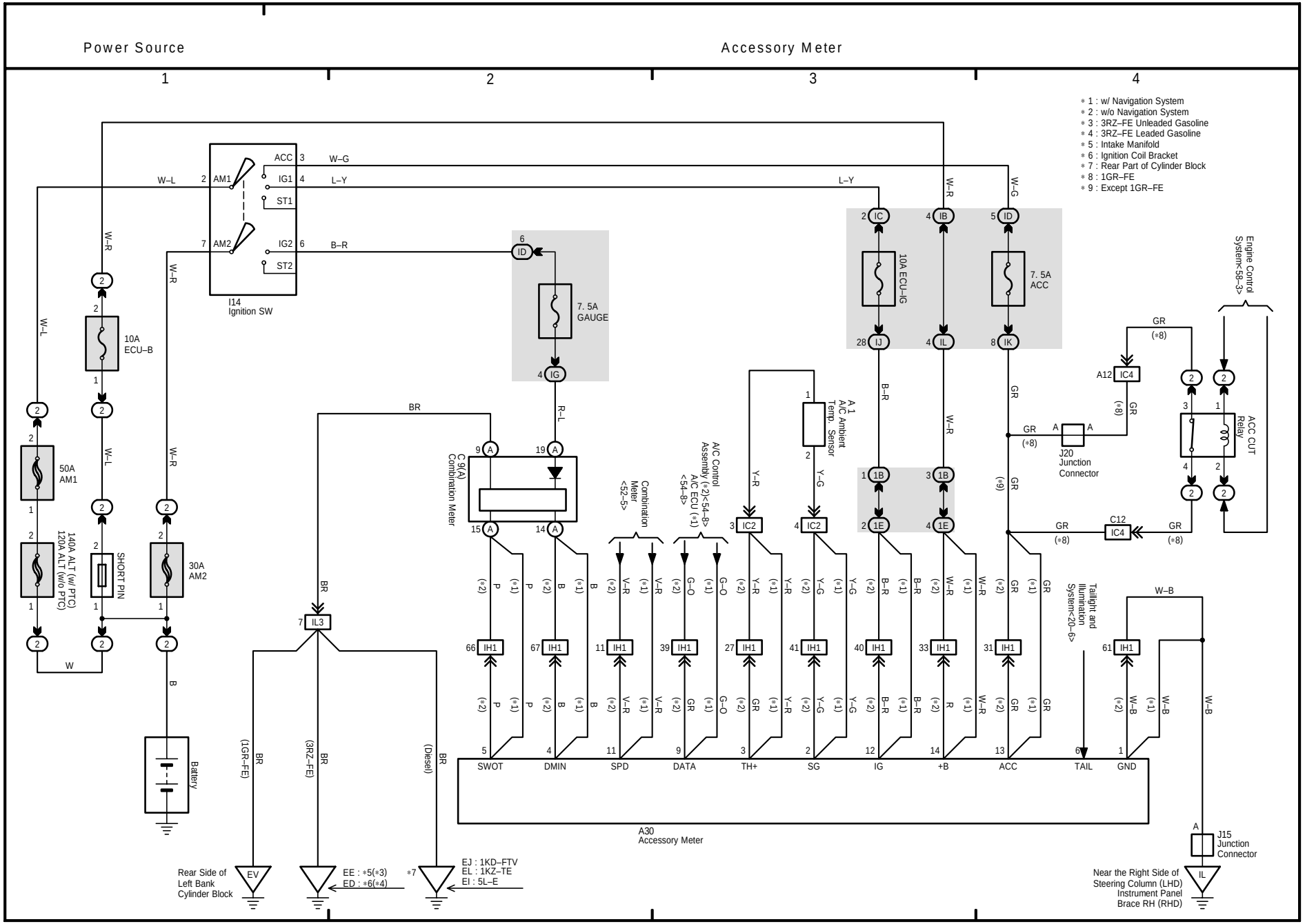
Power Source
Accessory Meter
1
2
3
4
* 1 : w/ Navigation System
* 2 : w/o Navigation System
* 3 : 3RZ–FE Unleaded Gasoline
* 4 : 3RZ–FE Leaded Gasoline
* 5 : Intake Manifold
* 6 : Ignition Coil Bracket
* 7 : Rear Part of Cylinder Block
* 8 : 1GR–FE
* 9 : Except 1GR–FE
I14
Ignition SW
ACC
IG1
ST1
AM1
AM2
IG2
ST2
10A ECU–B
50A AM1
140A ALT (w/ PTC)
120A ALT (w/o PTC)
SHORT PIN
30A AM2
Battery
7. 5A GAUGE
10A ECU–IG
7. 5A ACC
C 9(A)
Combination Meter
Combination Meter <52–5>
A/C Control Assembly (*2)<54–8>
A/C ECU (*1) <54–8>
A 1
A/C Ambient Temp. Sensor
J20
Junction Connector
C12
IC4
A12
ACC CUT Relay
Engine Control System<38–3>
Taillight and Illumination System<20–6>
IL3
IH1
SWOT
DMIN
SPD
DATA
TH+
SG
IG
+B
ACC
TAIL
GND
A30
Accessory Meter
J15
Junction Connector
Rear Side of Left Bank Cylinder Block
EV
(1GR–FE)
(3RZ–FE)
(Diesel)
EE : *5(*3)
ED : *6(*4)
*7
EJ : 1KD–FTV
EL : 1KZ–TE
EI : 5L–E
Near the Right Side of Steering Column (LHD) Instrument Panel Brace RH (RHD)
IL

48 LAND CRUISER / LAND CRUISER PRADO

(Cont. next page)

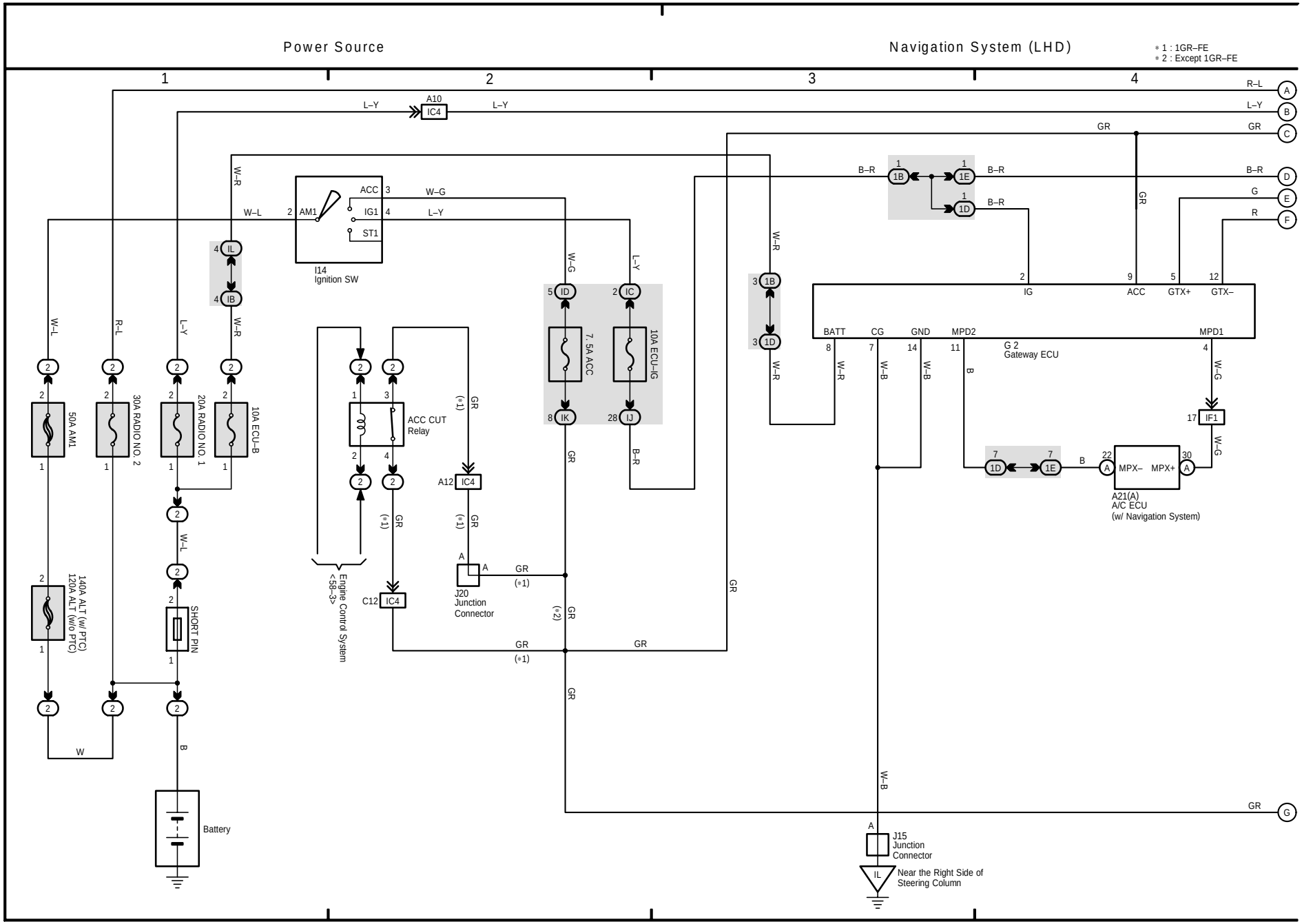

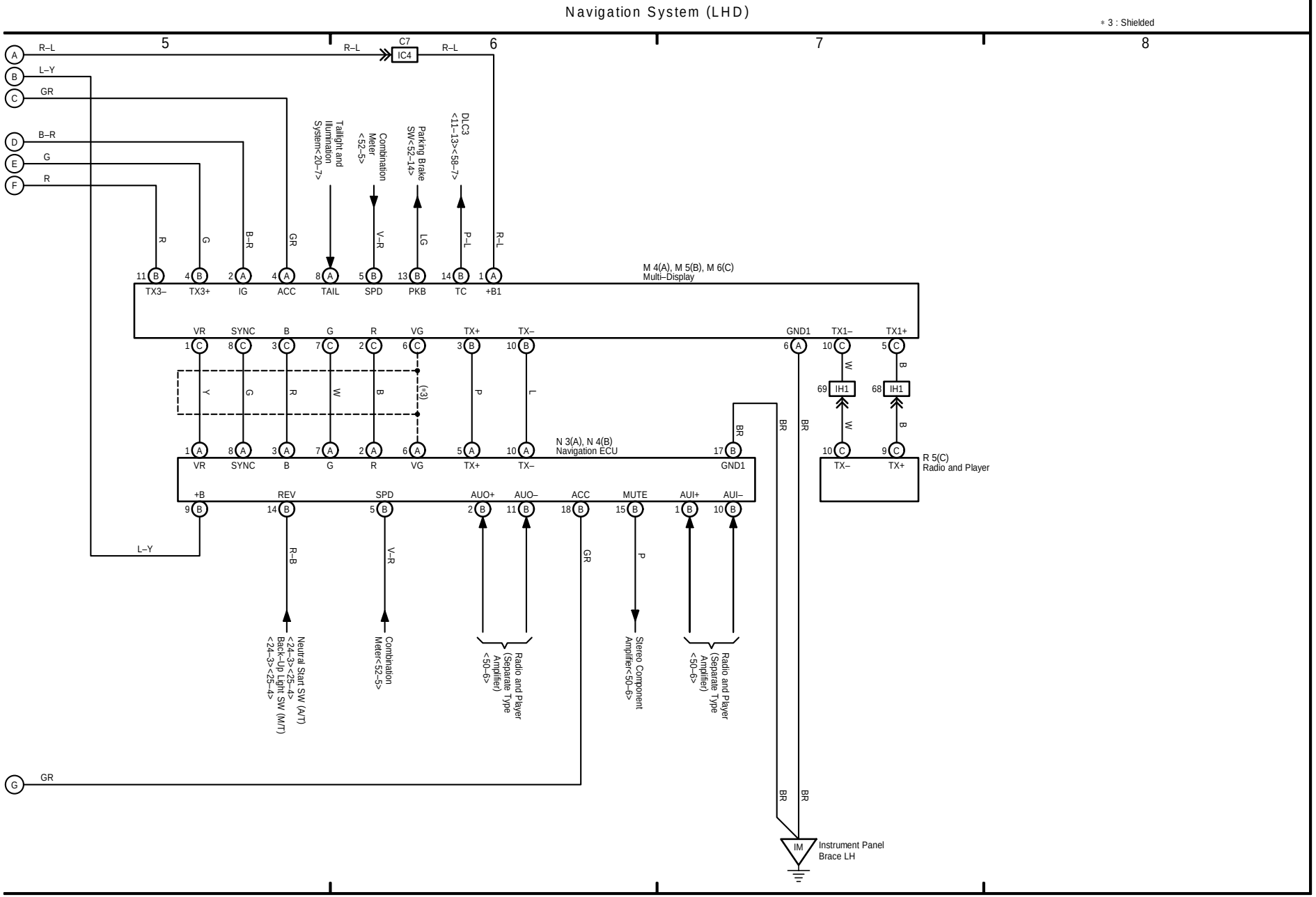
Navigation System (LHD)
* 3 : Shielded
5
6
7
8
C7
IC4
R–L
L–Y
GR
B–R
G
R
Taillight and Illumination System<20–7>
Combination Meter <52–5>
Parking Brake SW<52–14>
DLC3 <11–13><58–7>
V–R
LG
P–L
M 4(A), M 5(B), M 6(C) Multi–Display
TX3–
TX3+
IG
ACC
TAIL
SPD
PKB
TC
+B1
VR
SYNC
B
G
R
VG
TX+
TX–
GND1
TX1–
TX1+
IH1
(*3)
N 3(A), N 4(B) Navigation ECU
R 5(C) Radio and Player
+B
REV
SPD
AUO+
AUO–
ACC
MUTE
AUI+
AUI–
BR
R–B
Neutral Start SW (A/T) <24–3><25–4> Back–Up Light SW (M/T) <24–3><25–4>
Combination Meter<52–5>
Radio and Player (Separate Type Amplifier) <50–6>
Stereo Component Amplifier<50–6>
IM
Instrument Panel Brace LH

49 LAND CRUISER / LAND CRUISER PRADO

(Cont. next page)

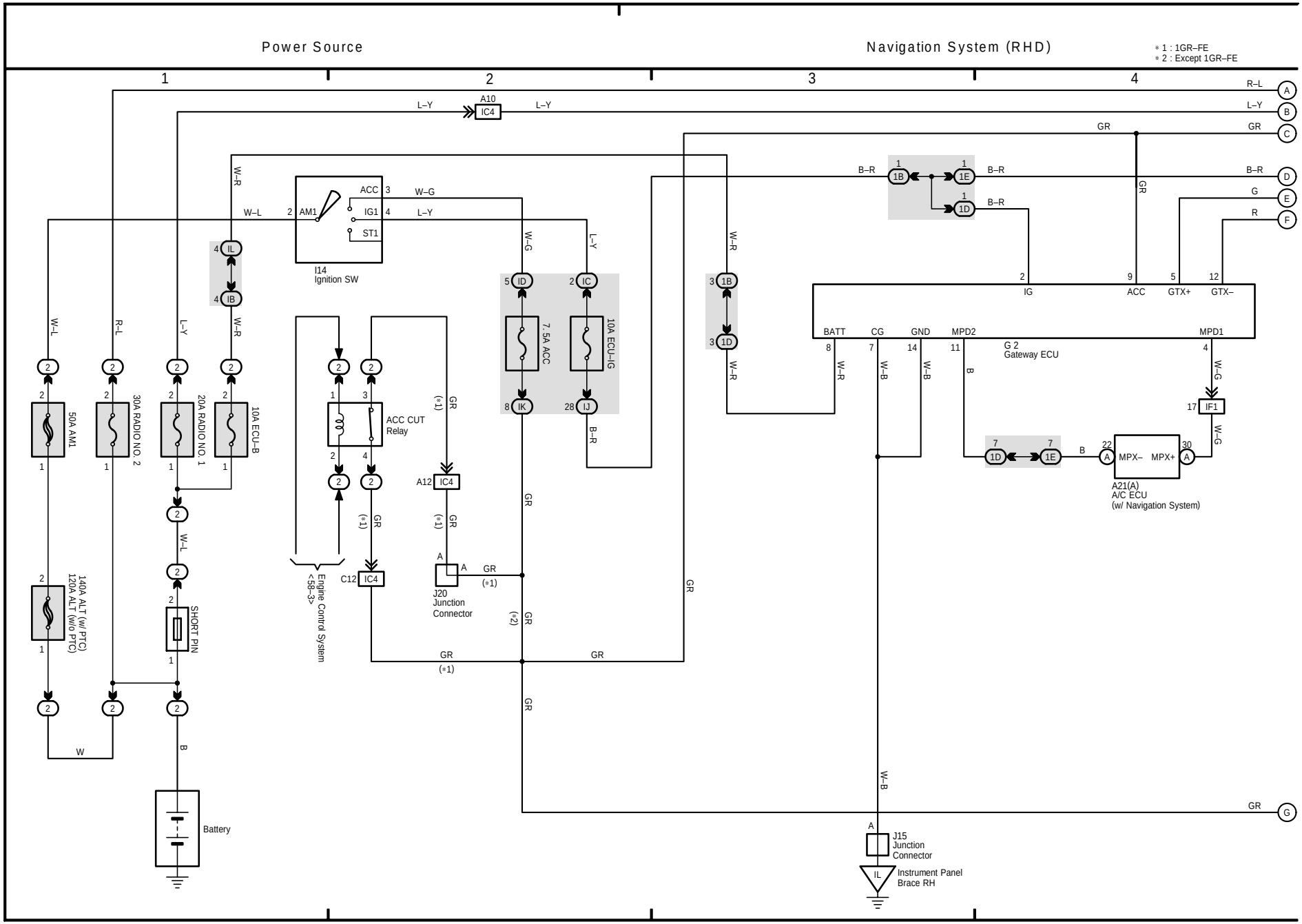

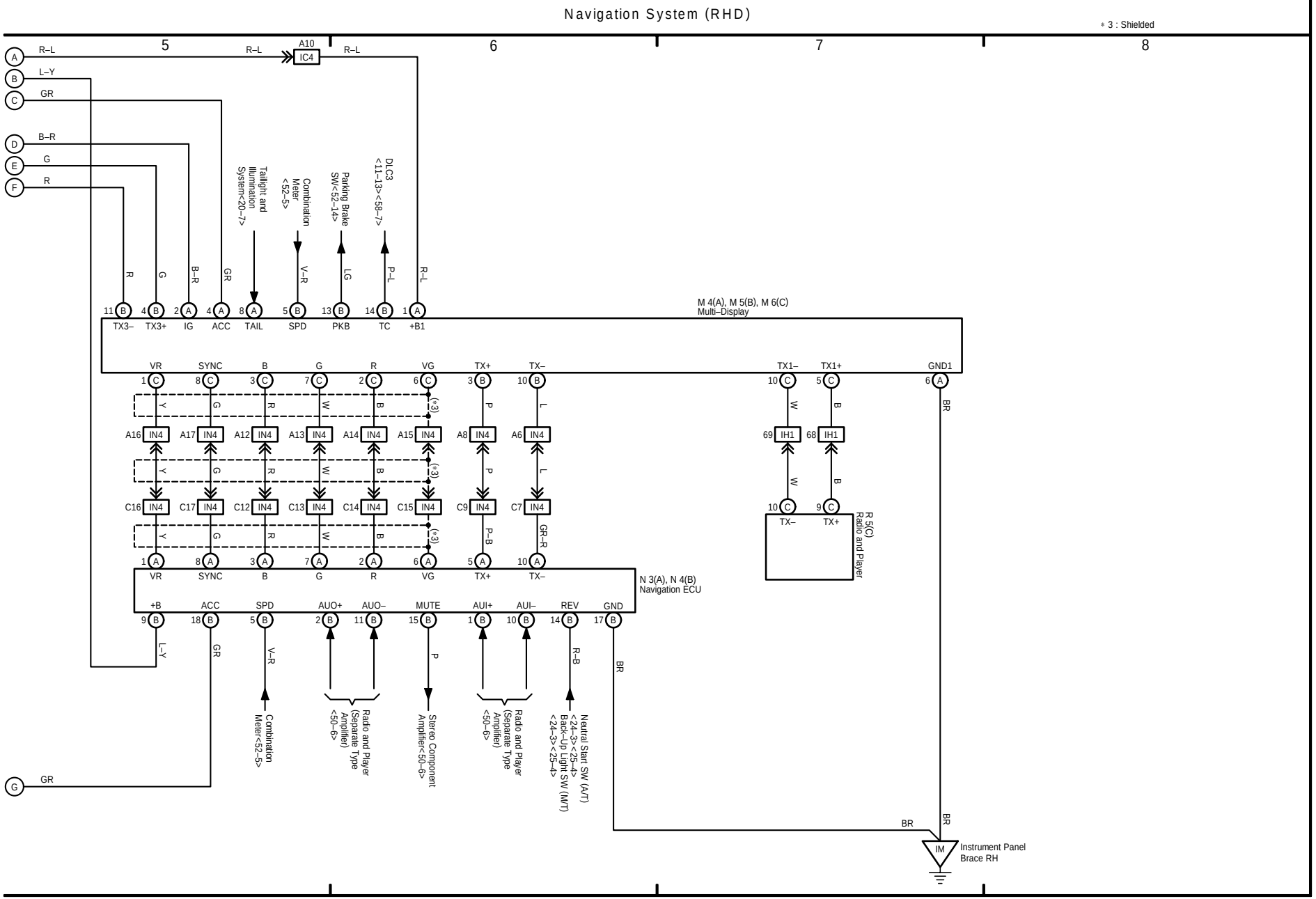
Navigation System (RHD)
* 3 : Shielded
5
6
7
8
A10
IC4
R–L
L–Y
GR
B–R
G
R
Taillight and Illumination System<20–7>
Combination Meter <52–5>
Parking Brake SW<52–14>
DLC3 <11–13><58–7>
TX3–
TX3+
IG
ACC
TAIL
SPD
PKB
TC
+B1
M 4(A), M 5(B), M 6(C) Multi–Display
VR
SYNC
B
G
R
VG
TX+
TX–
TX1–
TX1+
GND1
IN4
IH1
R 5(C) Radio and Player
N 3(A), N 4(B) Navigation ECU
+B
ACC
SPD
AUO+
AUO–
MUTE
AUI+
AUI–
REV
GND
Combination Meter<52–5>
Radio and Player (Separate Type Amplifier) <50–6>
Stereo Component Amplifier<50–6>
Neutral Start SW (A/T) <24–3><25–4> Back–Up Light SW (M/T) <24–3><25–4>
Instrument Panel Brace RH
IM

50 LAND CRUISER / LAND CRUISER PRADO

(Cont. next page)

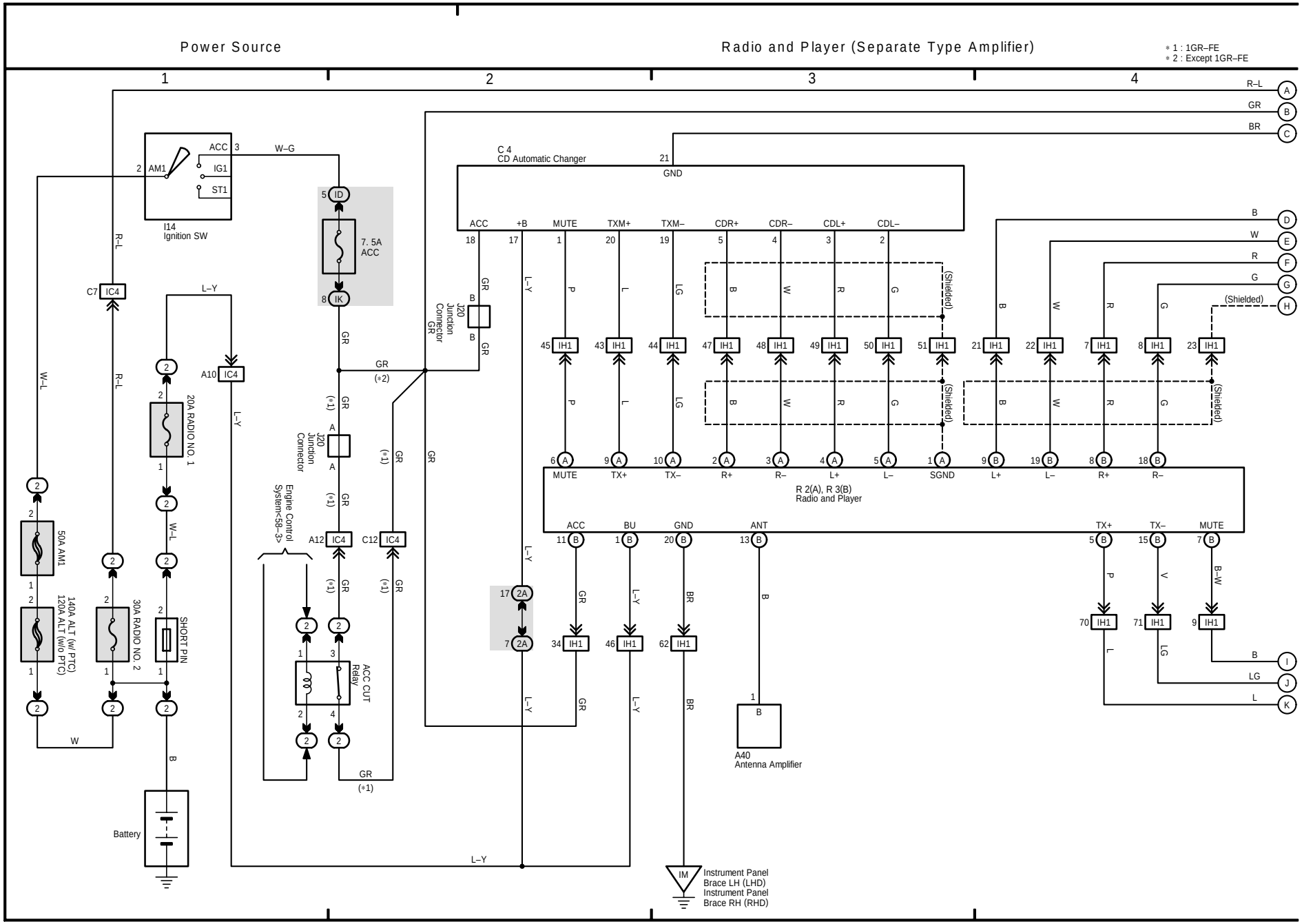

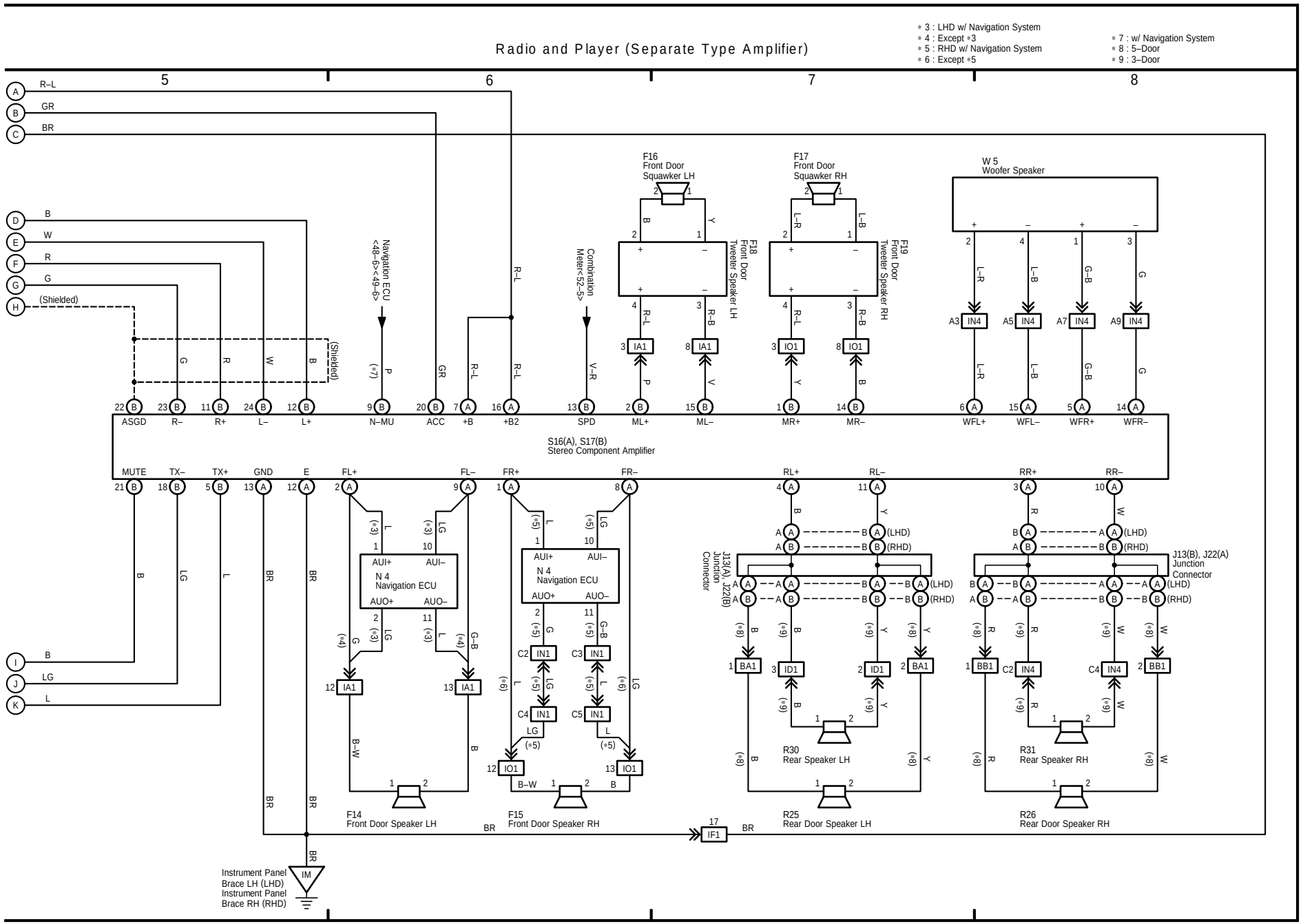
Radio and Player (Separate Type Amplifier)
∗ 3 : LHD w/ Navigation System
∗ 4 : Except ∗3
∗ 5 : RHD w/ Navigation System
∗ 6 : Except ∗5
∗ 7 : w/ Navigation System
∗ 8 : 5–Door
∗ 9 : 3–Door
5
6
7
8
R–L
GR
BR
(Shielded)
Navigation ECU <48–6><49–6>
Combination Meter<52–5>
F16 Front Door Squawker LH
F17 Front Door Squawker RH
F18 Front Door Tweeter Speaker LH
F19 Front Door Tweeter Speaker RH
W 5 Woofer Speaker
ASGD
R–
R+
L–
L+
N–MU
ACC
+B
+B2
SPD
ML+
ML–
MR+
MR–
WFL+
WFL–
WFR+
WFR–
S16(A), S17(B) Stereo Component Amplifier
MUTE
TX–
TX+
GND
E
FL+
FL–
FR+
FR–
RL+
RL–
RR+
RR–
N 4 Navigation ECU
AUI+
AUI–
AUO+
AUO–
J13(A), J22(A) Junction Connector
J13(B), J22(A) Junction Connector
(LHD)
(RHD)
R30 Rear Speaker LH
R31 Rear Speaker RH
F14 Front Door Speaker LH
F15 Front Door Speaker RH
R25 Rear Door Speaker LH
R26 Rear Door Speaker RH
Instrument Panel Brace LH (LHD)
Instrument Panel Brace RH (RHD)

51 LAND CRUISER / LAND CRUISER PRADO

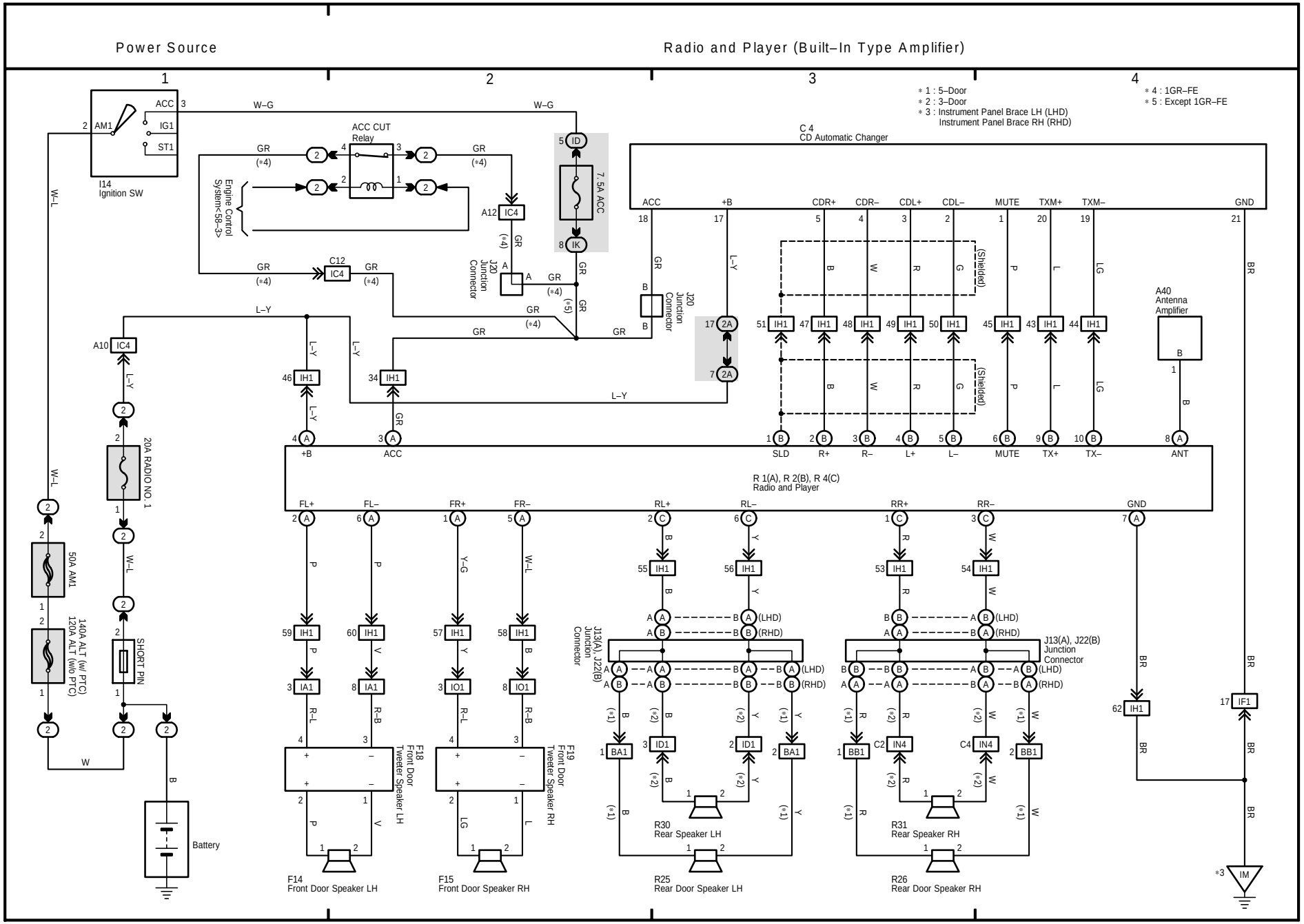

52 LAND CRUISER / LAND CRUISER PRADO

(Cont. next page)

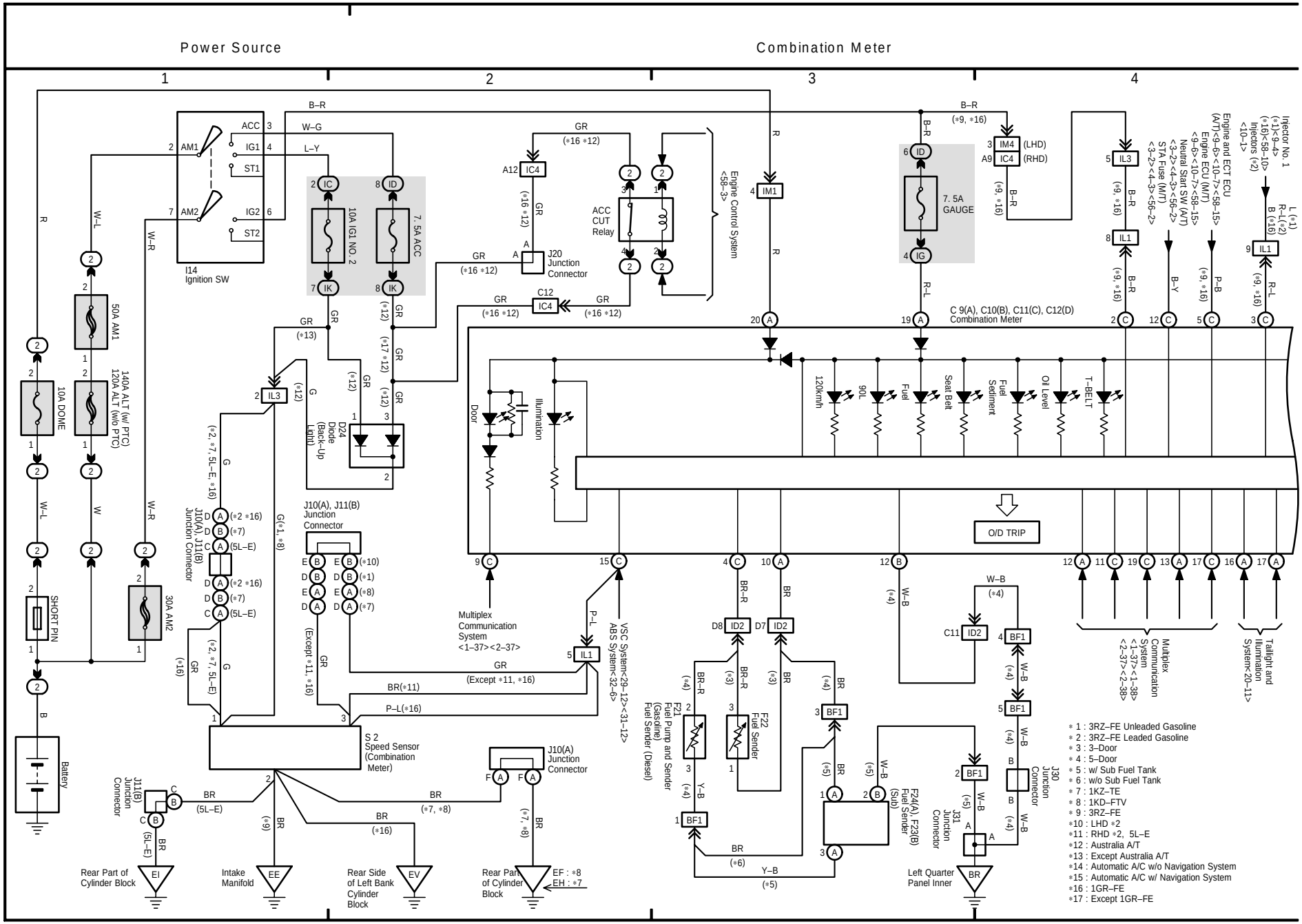

(Cont. next page)

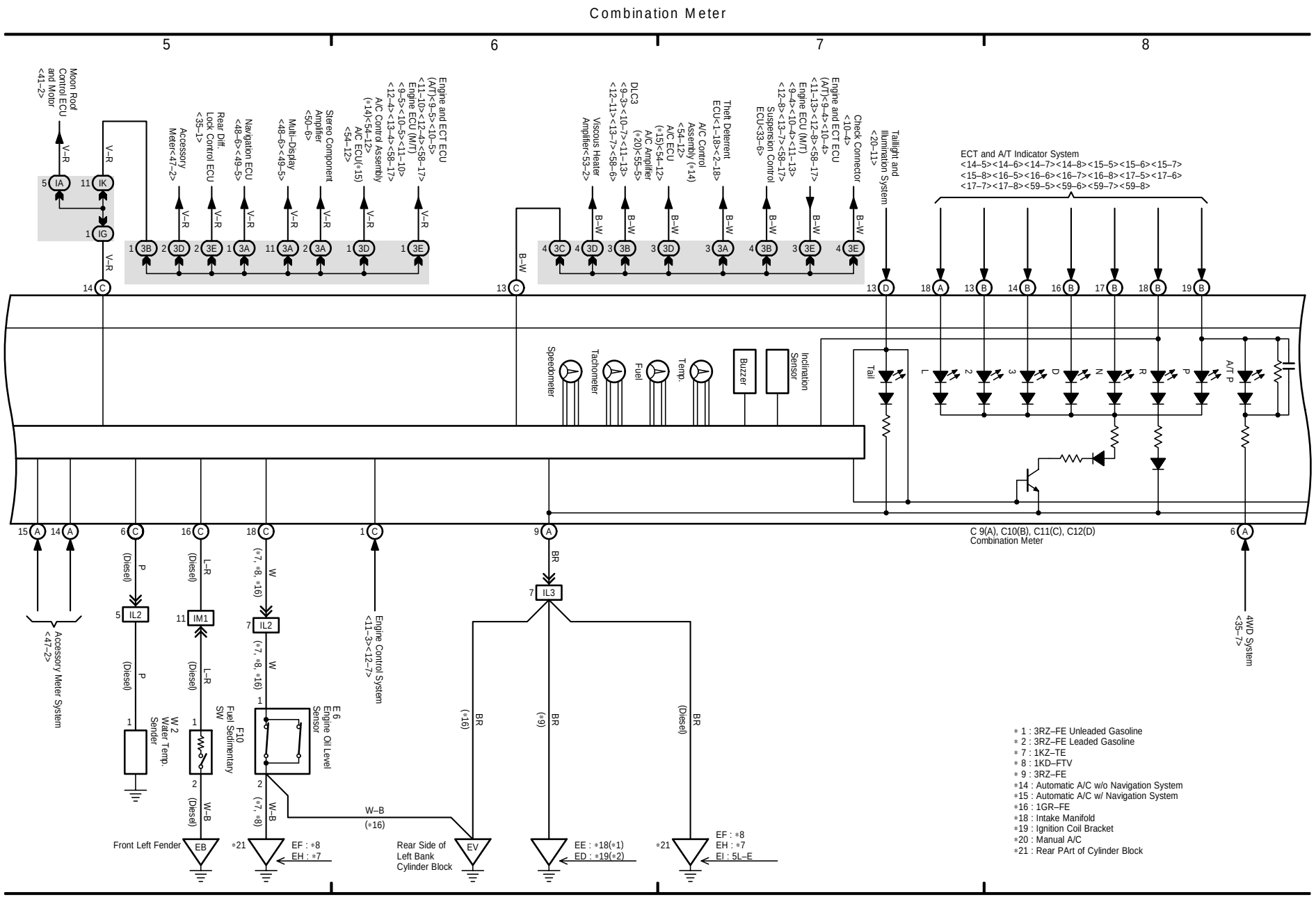

52 LAND CRUISER / LAND CRUISER PRADO (Cont' d)

(Cont. next page)

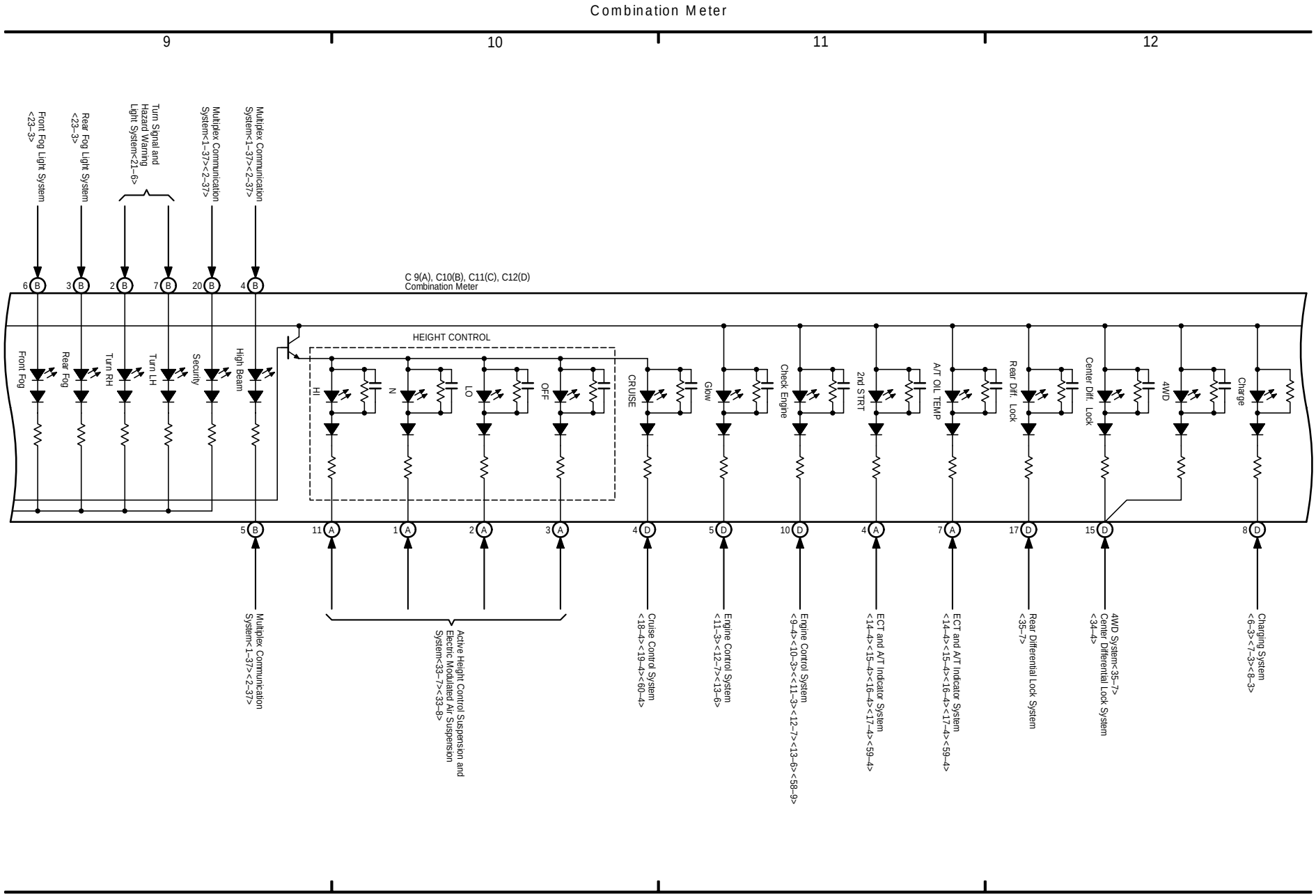

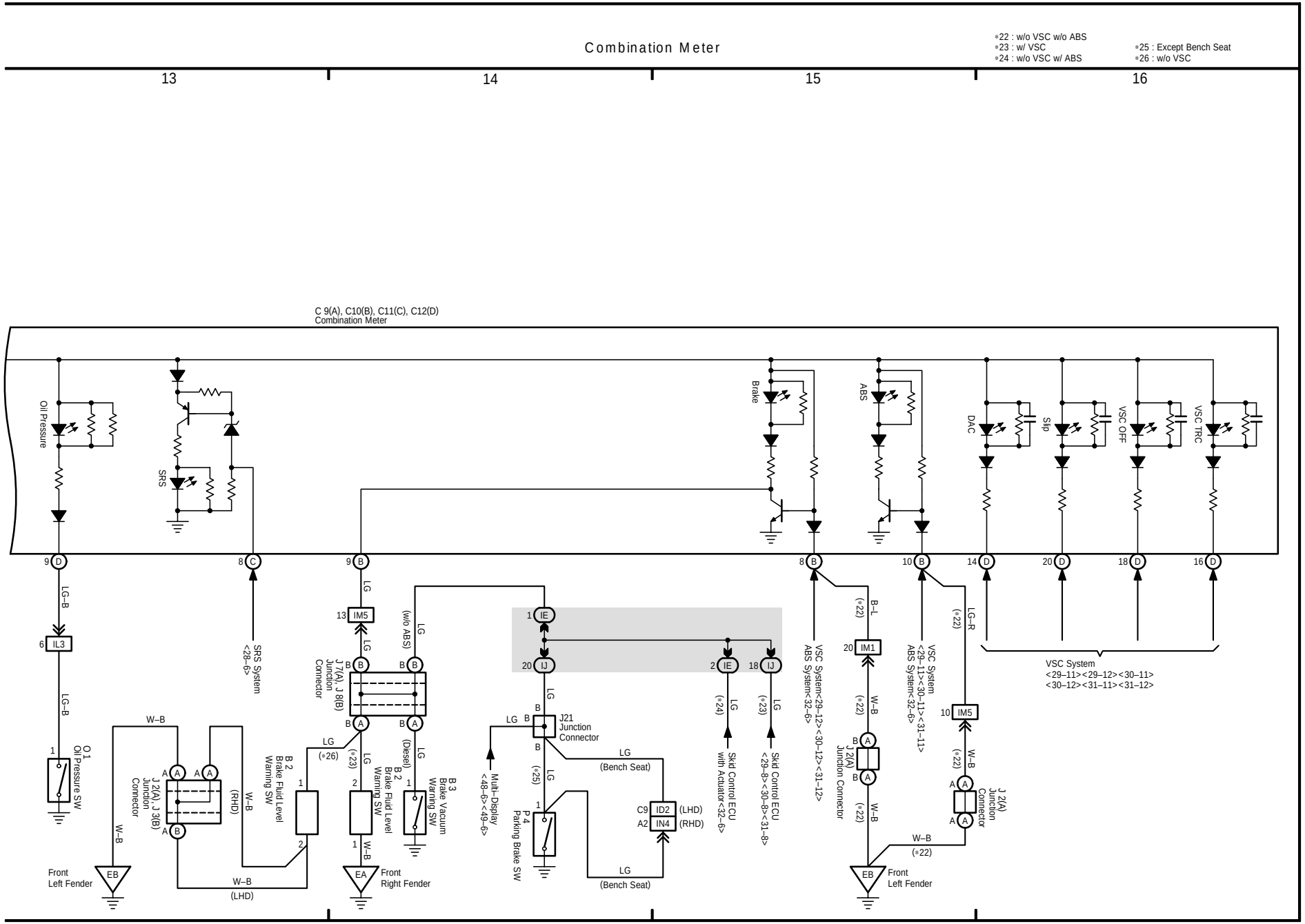
Combination Meter
*22 : w/o VSC w/o ABS
*23 : w/ VSC
*24 : w/o VSC w/ ABS
*25 : Except Bench Seat
*26 : w/o VSC
13
14
15
16
C 9(A), C10(B), C11(C), C12(D)
Combination Meter
Oil Pressure
SRS
Brake
ABS
DAC
Slip
VSC OFF
VSC TRC
IL3
O 1
Oil Pressure SW
SRS System
<28–6>
IM5
J 7(A), J 8(B)
Junction
Connector
(w/o ABS)
IE
IJ
J21
Junction
Connector
Multi–Display
<48–6><49–6>
P 4
Parking Brake SW
(Bench Seat)
ID2
IN4
(LHD)
(RHD)
Skid Control ECU
with Actuator<32–6>
Skid Control ECU
<29–8><30–8><31–8>
IM1
VSC System<29–12><30–12><31–12>
ABS System<32–6>
VSC System
<29–11><30–11><31–11>
ABS System<32–6>
J 2(A)
Junction Connector
VSC System
<29–11><29–12><30–11>
<30–12><31–11><31–12>
J 2(A), J 3(B)
Junction
Connector
B 2
Brake Fluid Level
Warning SW
(Diesel)
B 3
Brake Vacuum
Warning SW
Front
Left Fender
Front
Right Fender
EB
EA
W–B
LG–B
LG
B–L
LG–R
(*22)
(*23)
(*24)
(*25)
(*26)

53 LAND CRUISER / LAND CRUISER PRADO

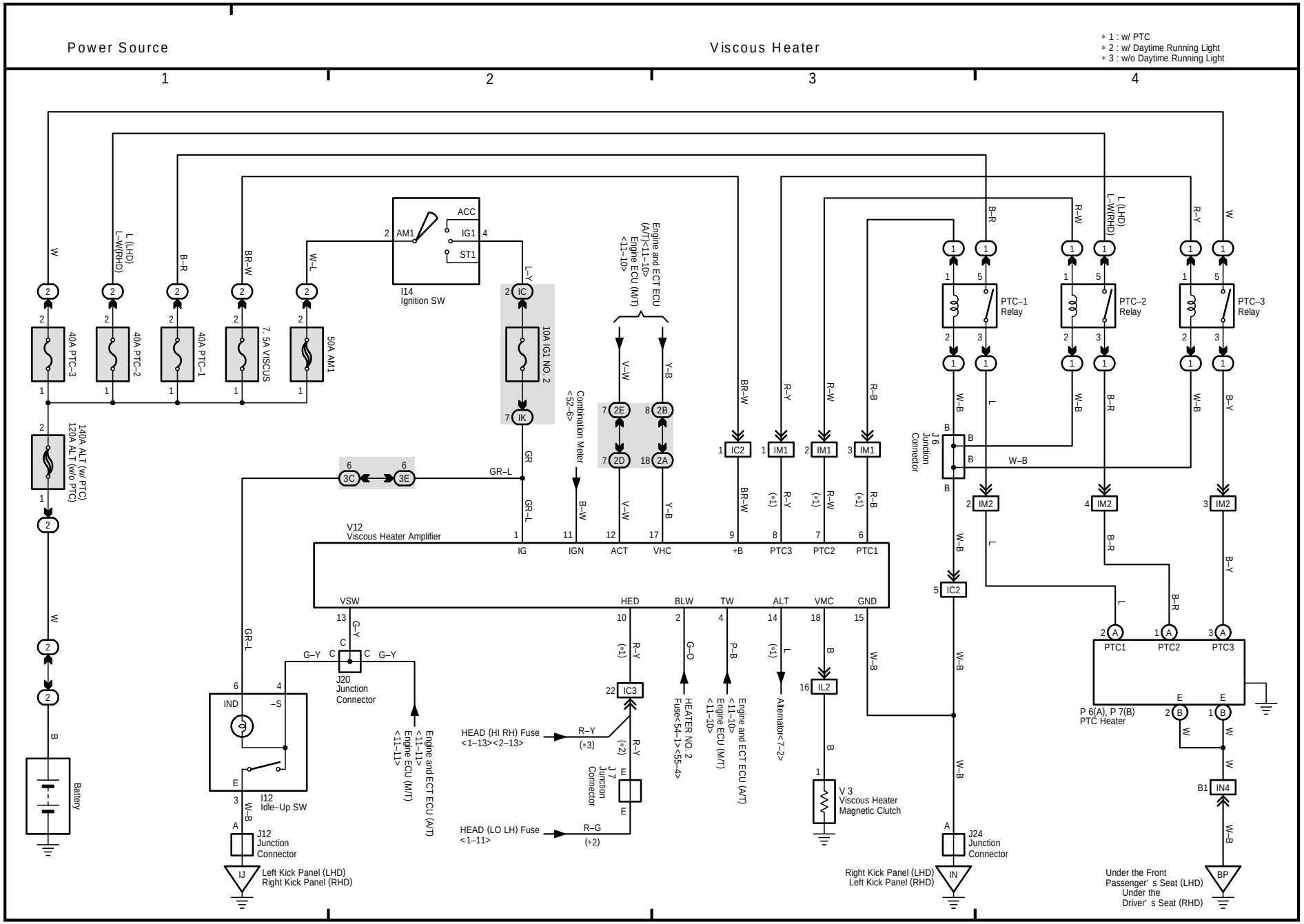

54 LAND CRUISER / LAND CRUISER PRADO

(Cont. next page)

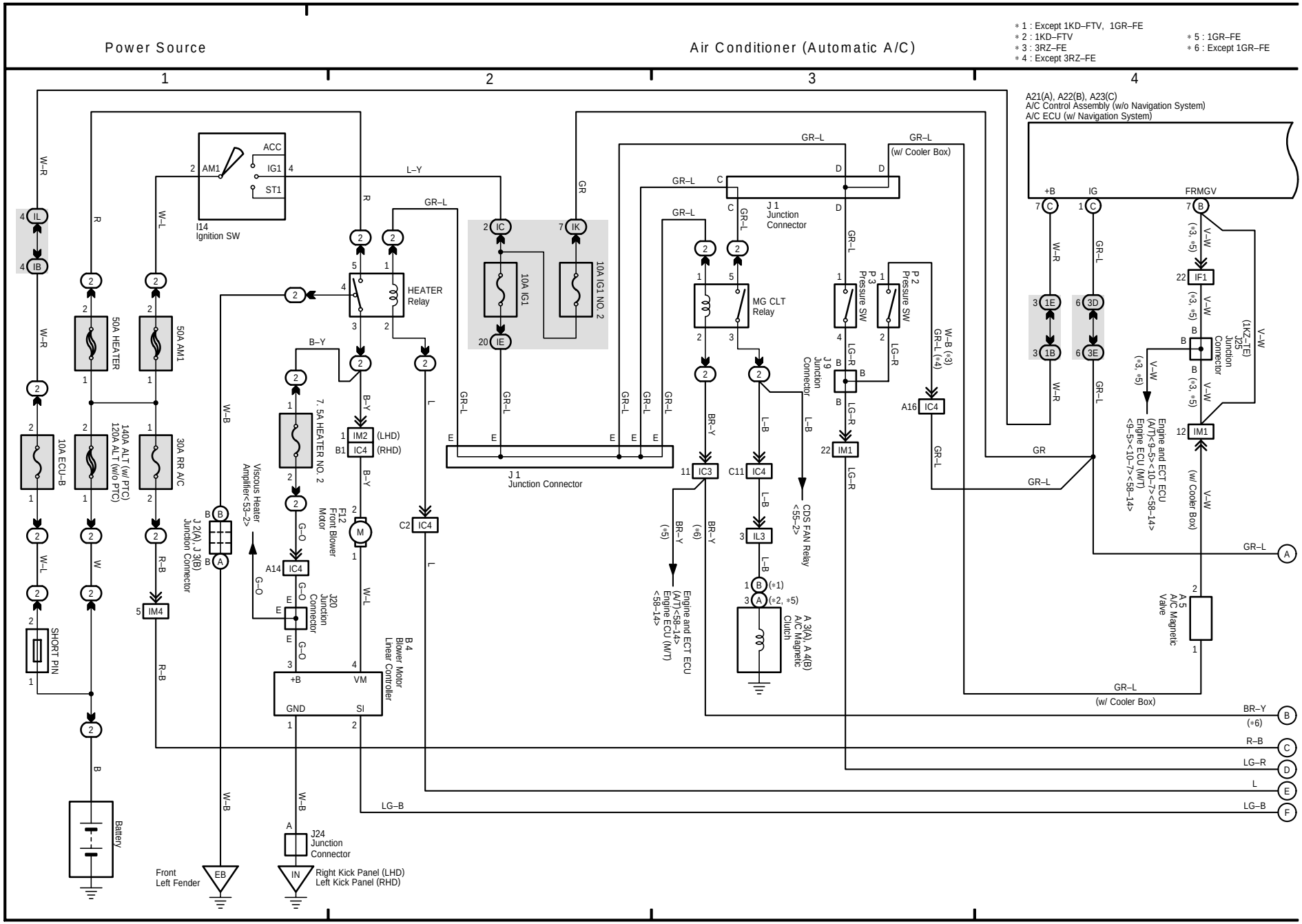

(Cont. next page)

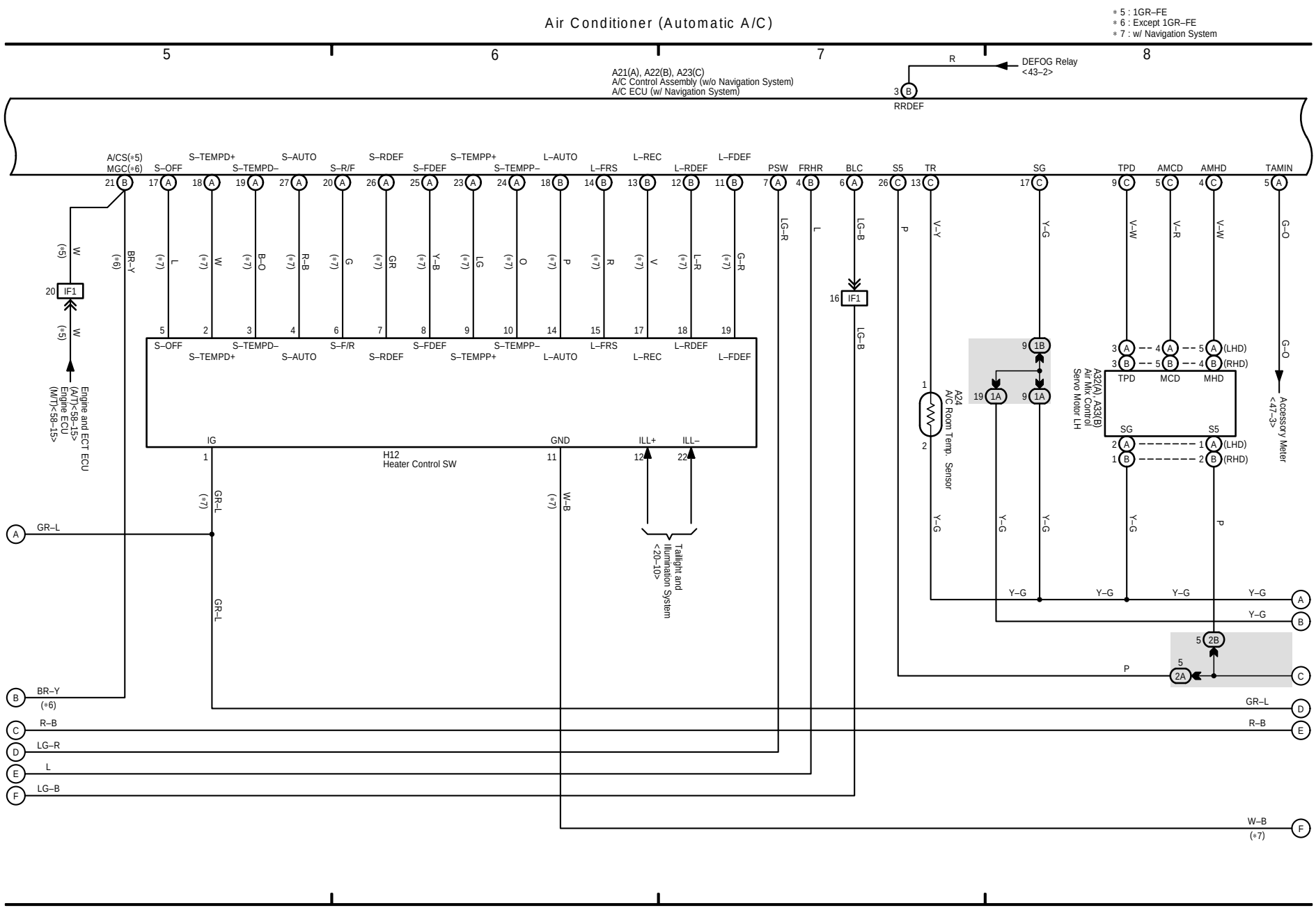

54 LAND CRUISER / LAND CRUISER PRADO (Cont' d)

(Cont. next page)

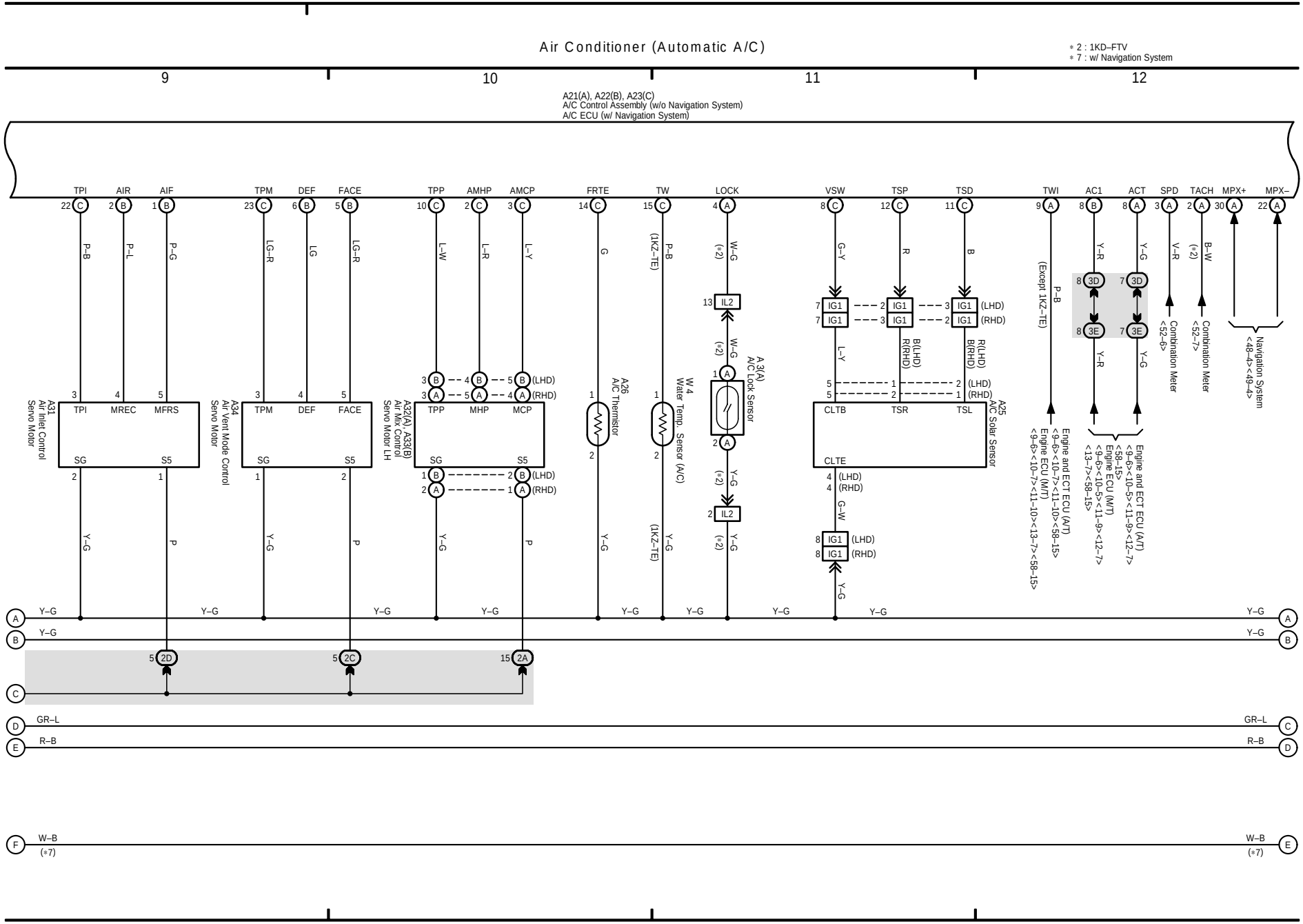

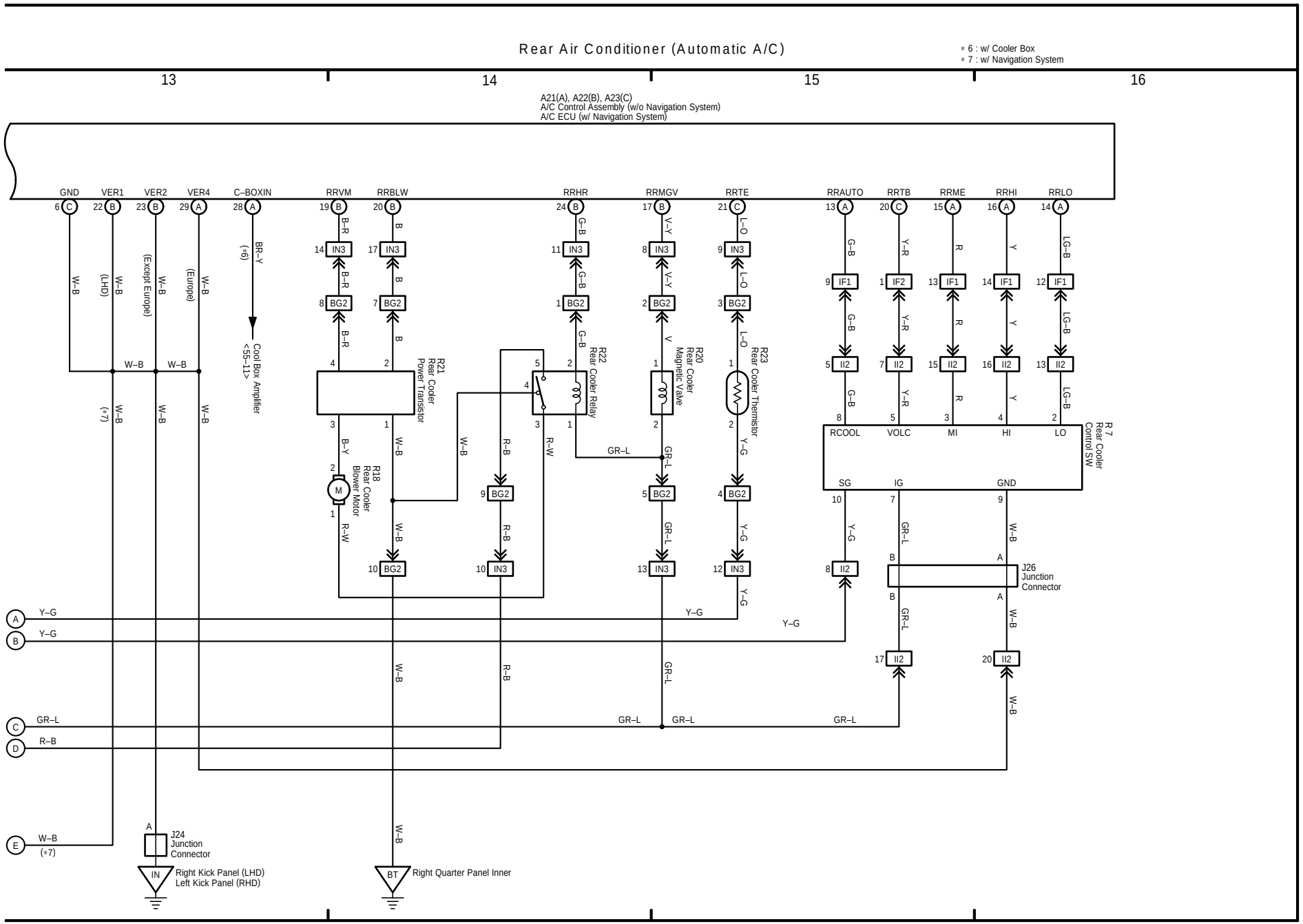
Rear Air Conditioner (Automatic A/C)
* 6 : w/ Cooler Box
* 7 : w/ Navigation System
13
14
15
16
A21(A), A22(B), A23(C)
A/C Control Assembly (w/o Navigation System)
A/C ECU (w/ Navigation System)
GND
VER1
VER2
VER4
C–BOXIN
RRVM
RRBLW
RRHR
RRMGV
RRTE
RRAUTO
RRTB
RRME
RRHI
RRLO
(LHD)
(Except Europe)
(Europe)
(*6)
Cool Box Amplifier <55–11>
R21 Rear Cooler Power Transistor
R22 Rear Cooler Relay
R20 Rear Cooler Magnetic Valve
R23 Rear Cooler Thermistor
R18 Rear Cooler Blower Motor
R 7 Rear Cooler Control SW
RCOOL
VOLC
MI
HI
LO
SG
IG
GND
J26 Junction Connector
J24 Junction Connector
(*7)
Right Kick Panel (LHD)
Left Kick Panel (RHD)
Right Quarter Panel Inner

55 LAND CRUISER / LAND CRUISER PRADO

(Cont. next page)

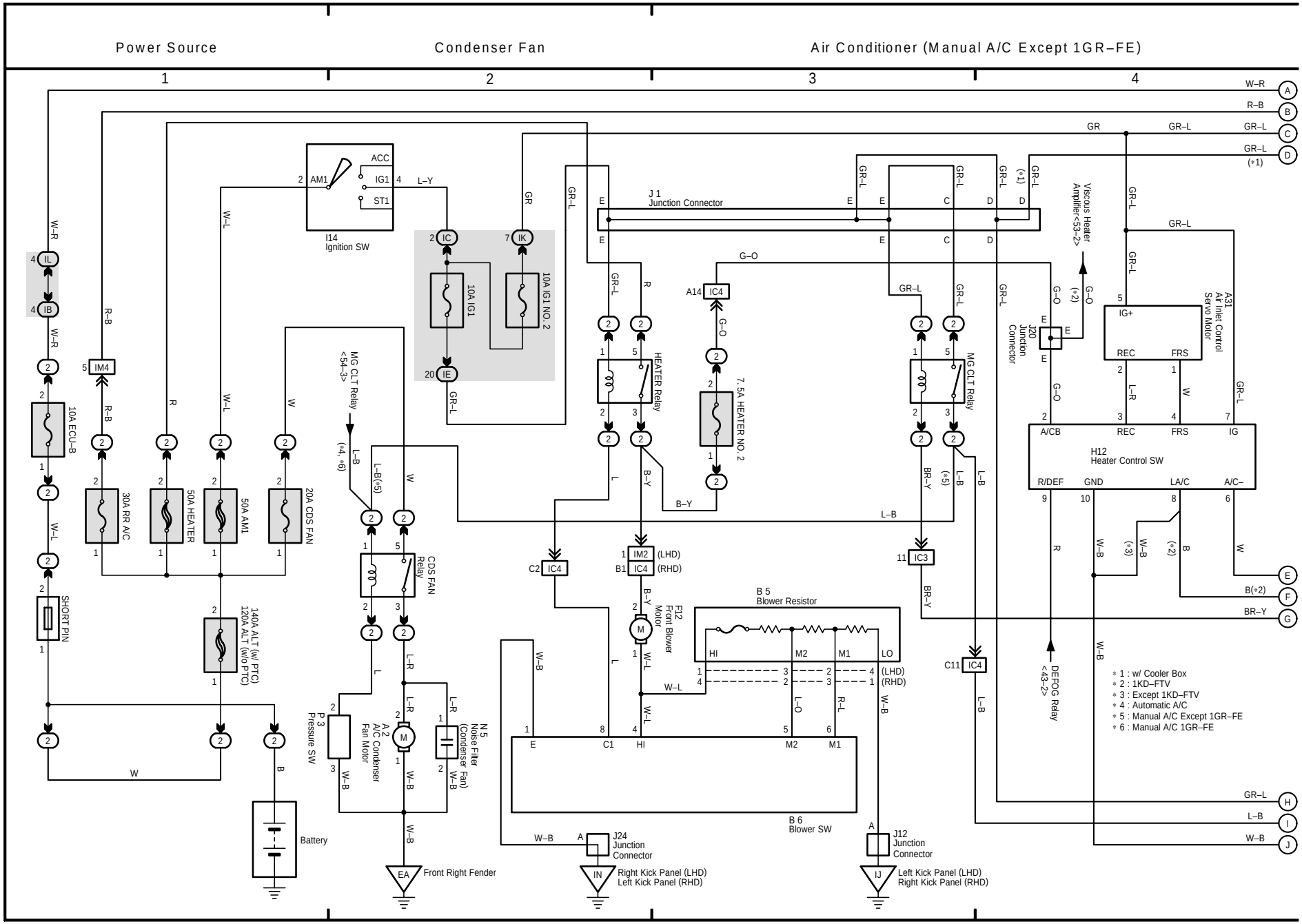

(Cont. next page)

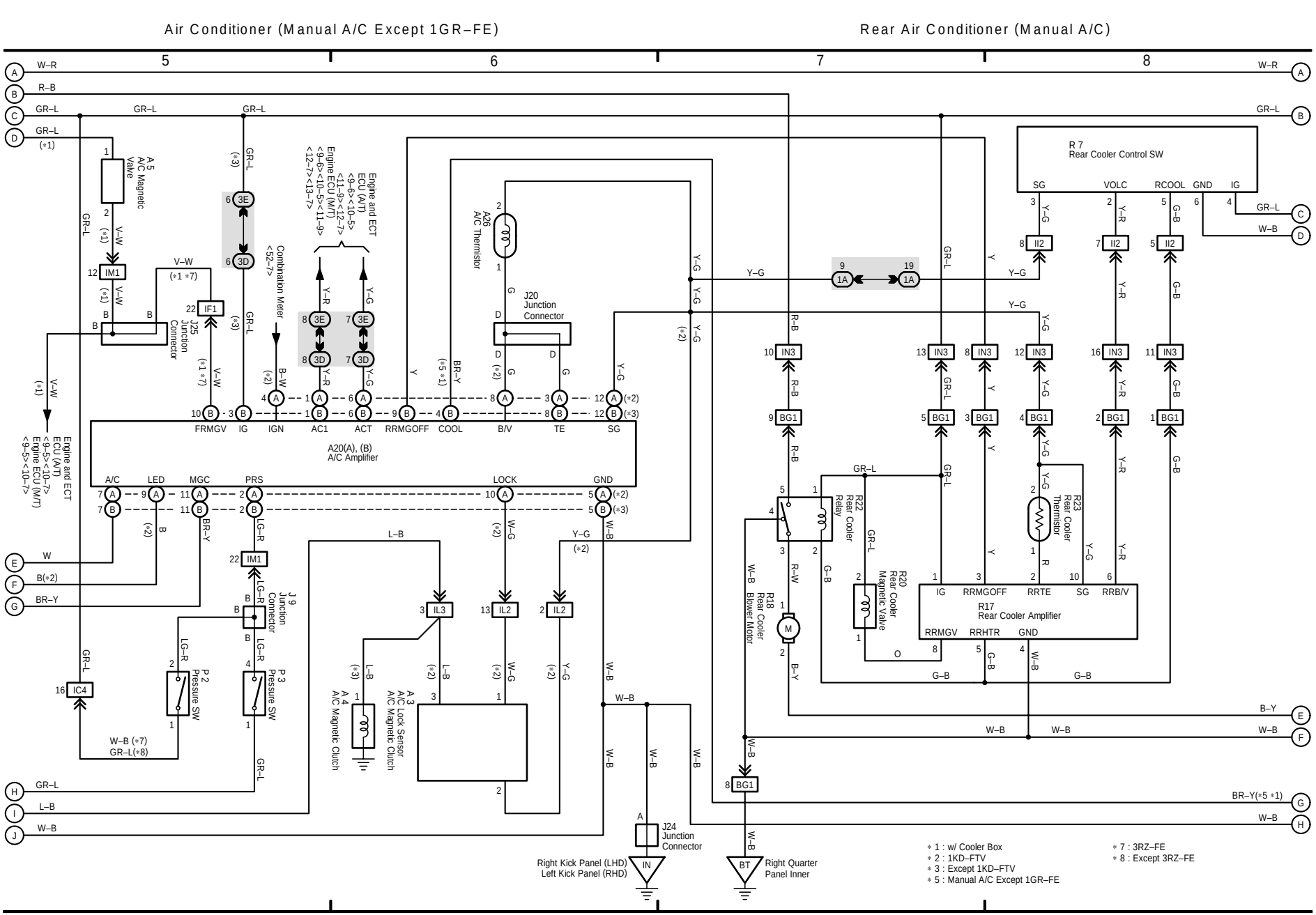

55 LAND CRUISER / LAND CRUISER PRADO (Cont' d)

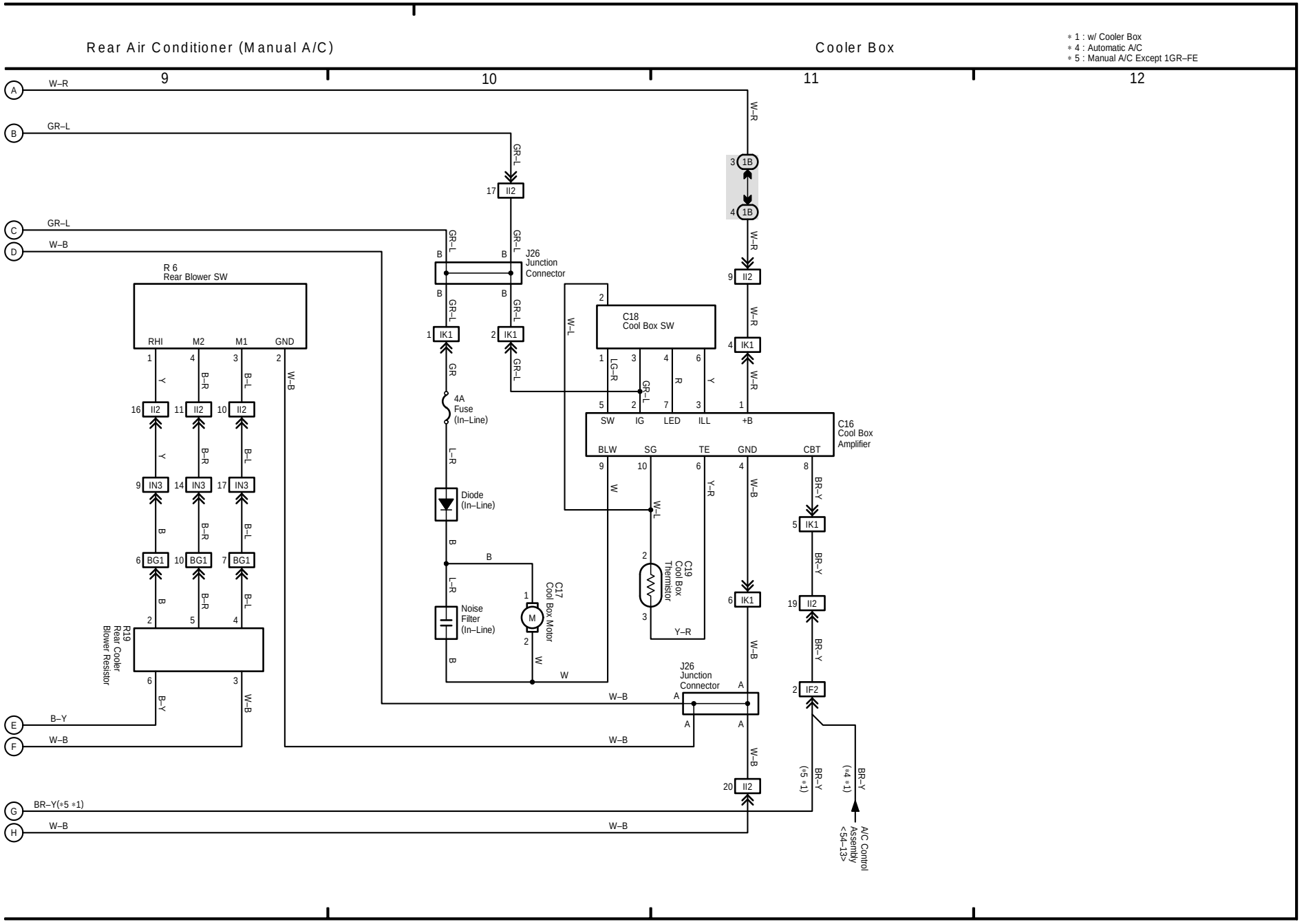

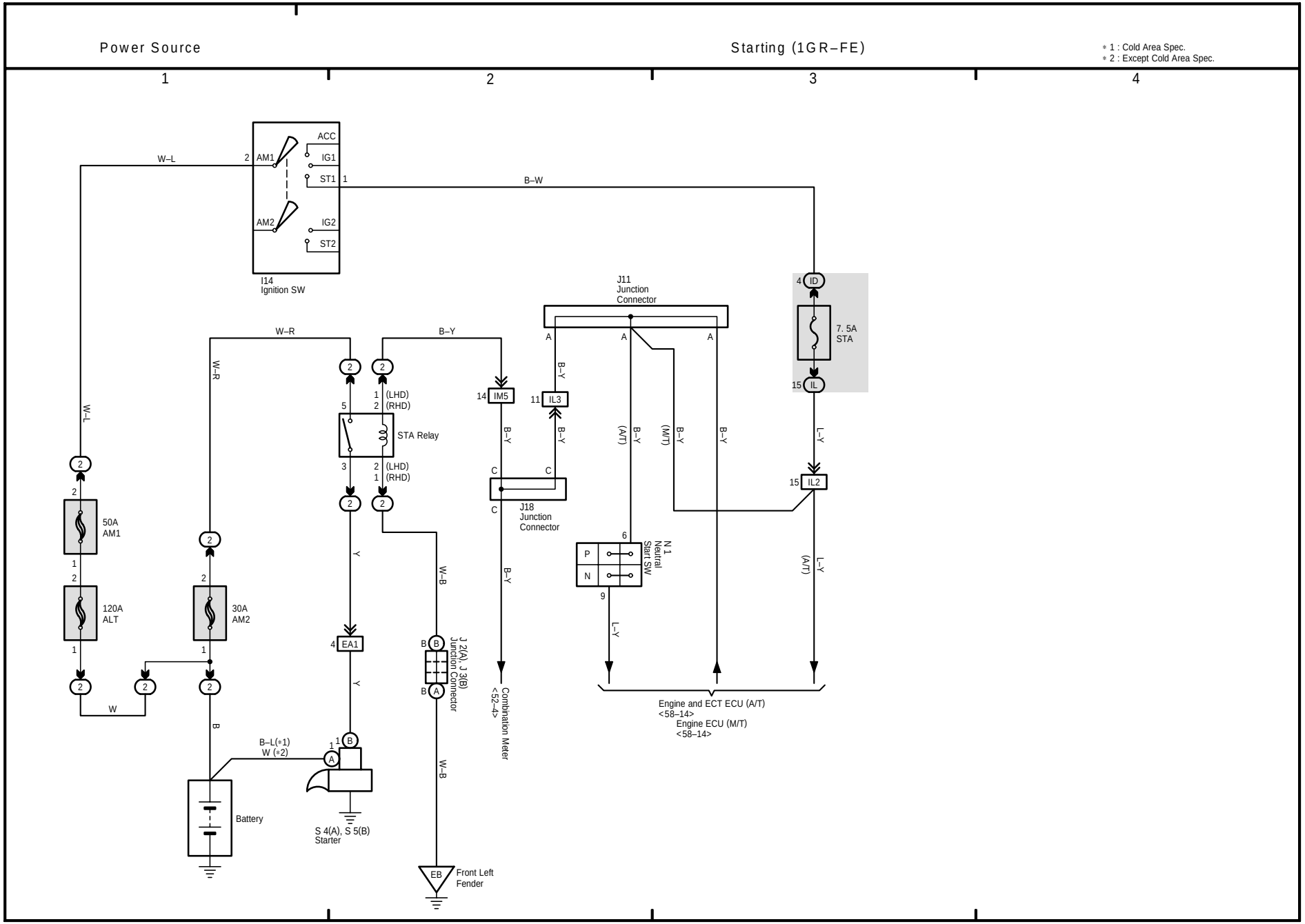
Power Source
Starting (1GR–FE)
∗1 : Cold Area Spec.
∗2 : Except Cold Area Spec.
1
2
3
4
ACC
IG1
ST1
AM1
AM2
IG2
ST2
I14
Ignition SW
W–L
B–W
J11
Junction
Connector
7. 5A
STA
ID
IL
W–R
B–Y
(LHD)
(RHD)
STA Relay
IM5
IL3
IL2
J18
Junction
Connector
50A
AM1
120A
ALT
30A
AM2
EA1
Y
W–B
J 2(A), J 3(B)
Junction Connector
Combination Meter
<52–4>
N 1
Neutral
Start SW
P
N
L–Y
(A/T)
(M/T)
Engine and ECT ECU (A/T)
<58–14>
Engine ECU (M/T)
<58–14>
W
B
B–L(∗1)
W (∗2)
Battery
S 4(A), S 5(B)
Starter
EB
Front Left
Fender

57 LAND CRUISER / LAND CRUISER PRADO

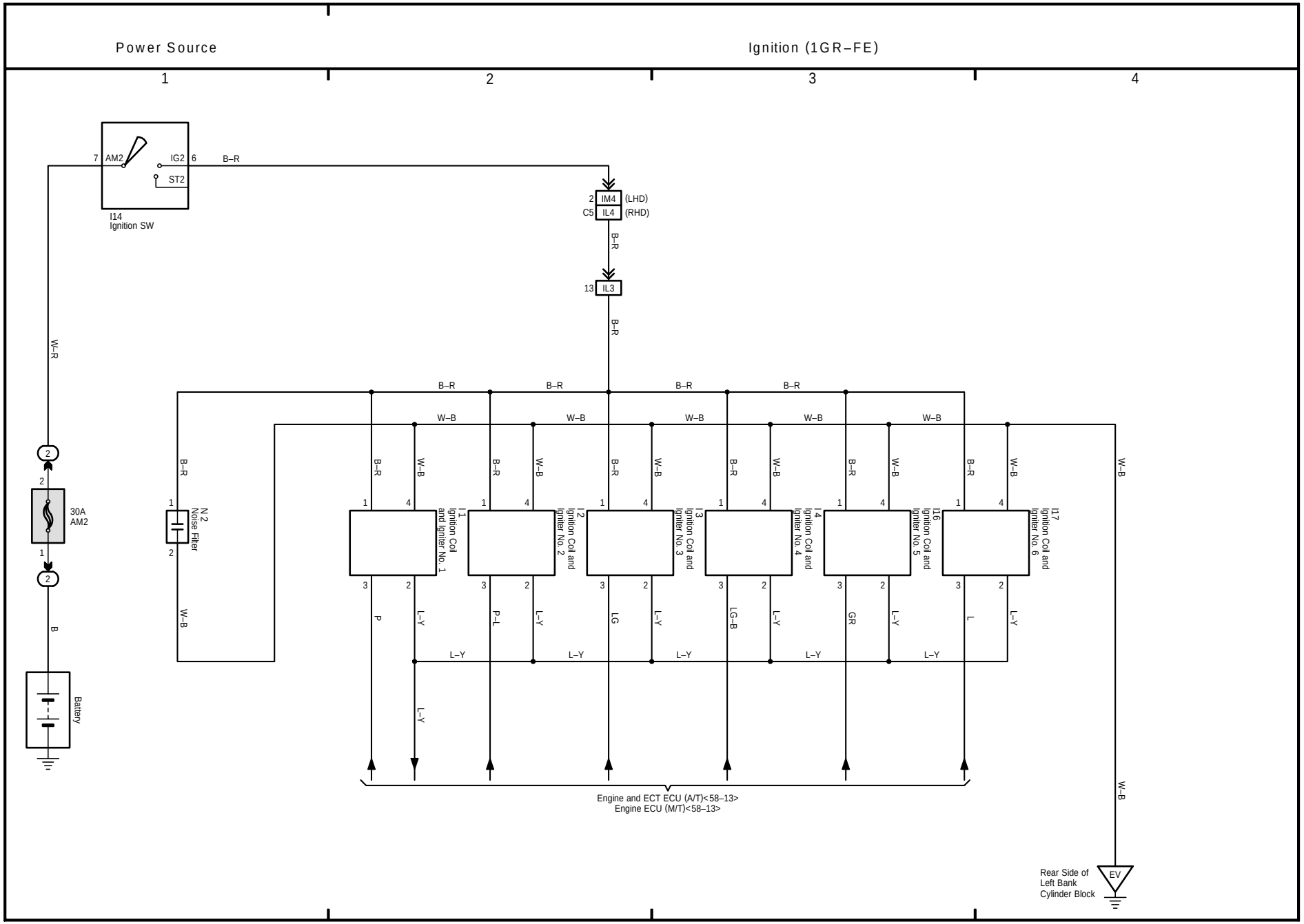

(Cont. next page)

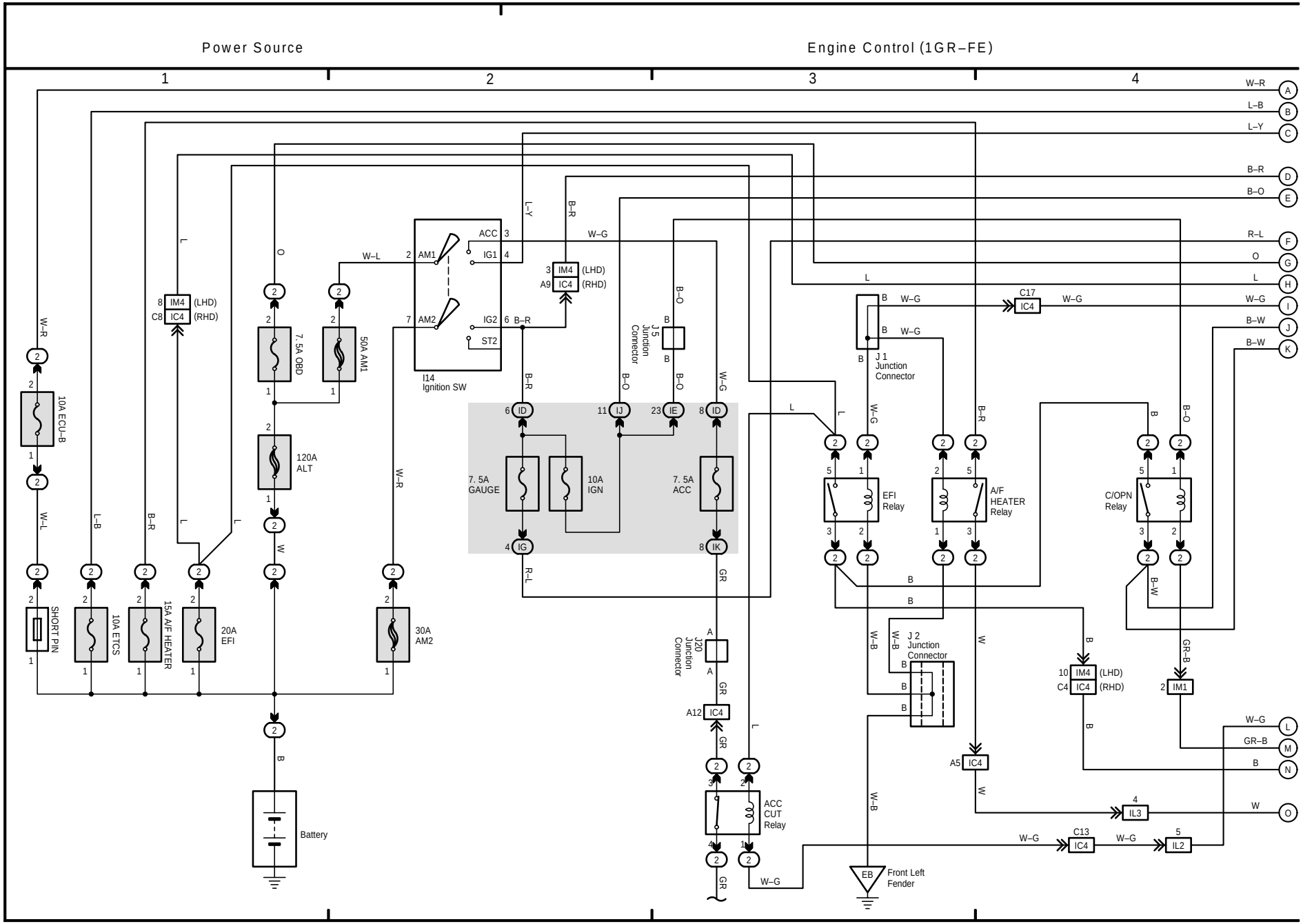

58 LAND CRUISER / LAND CRUISER PRADO (Cont' d)

(Cont. next page)

Engine Control (1GR–FE)

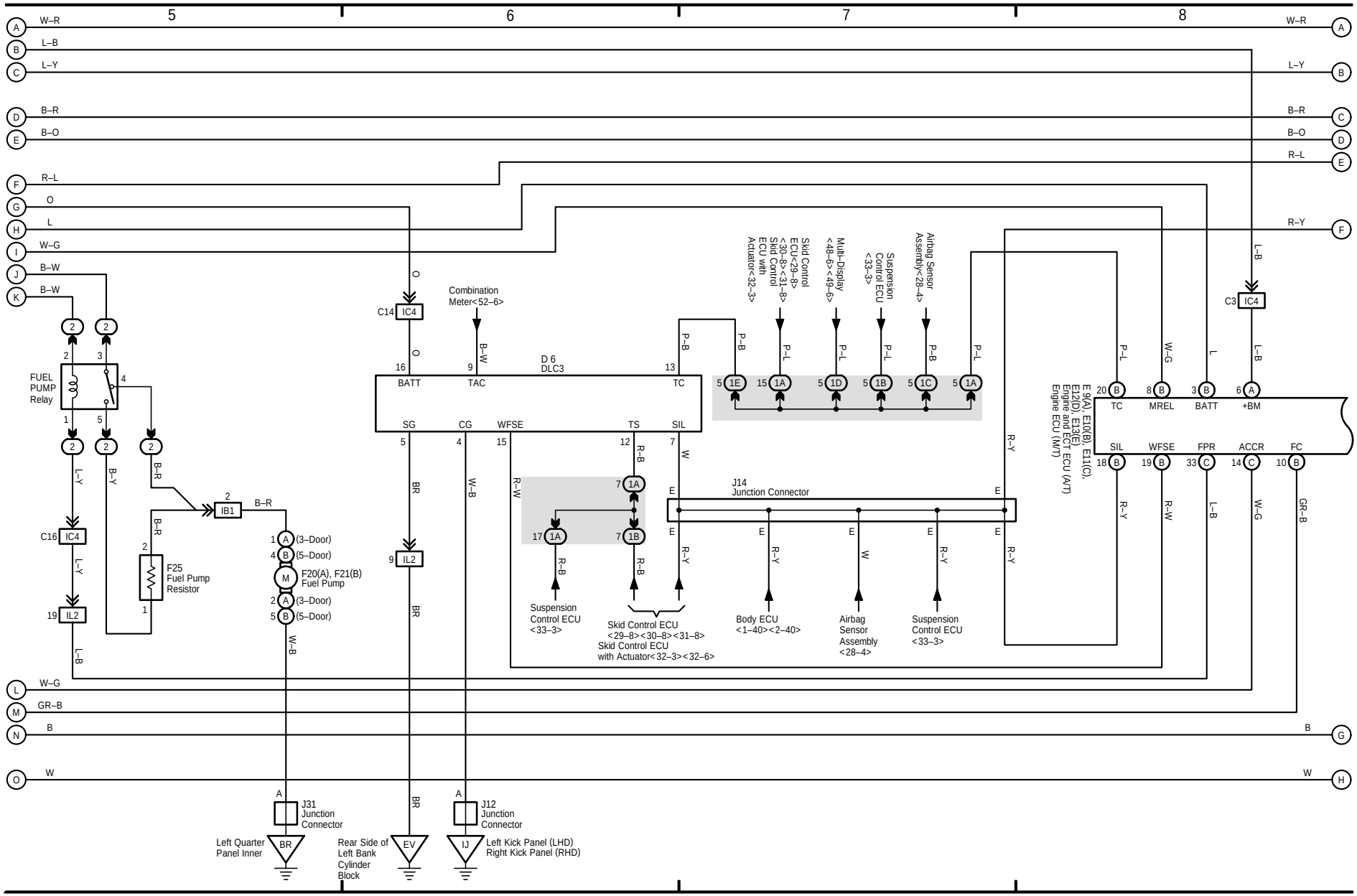

(Cont. next page)

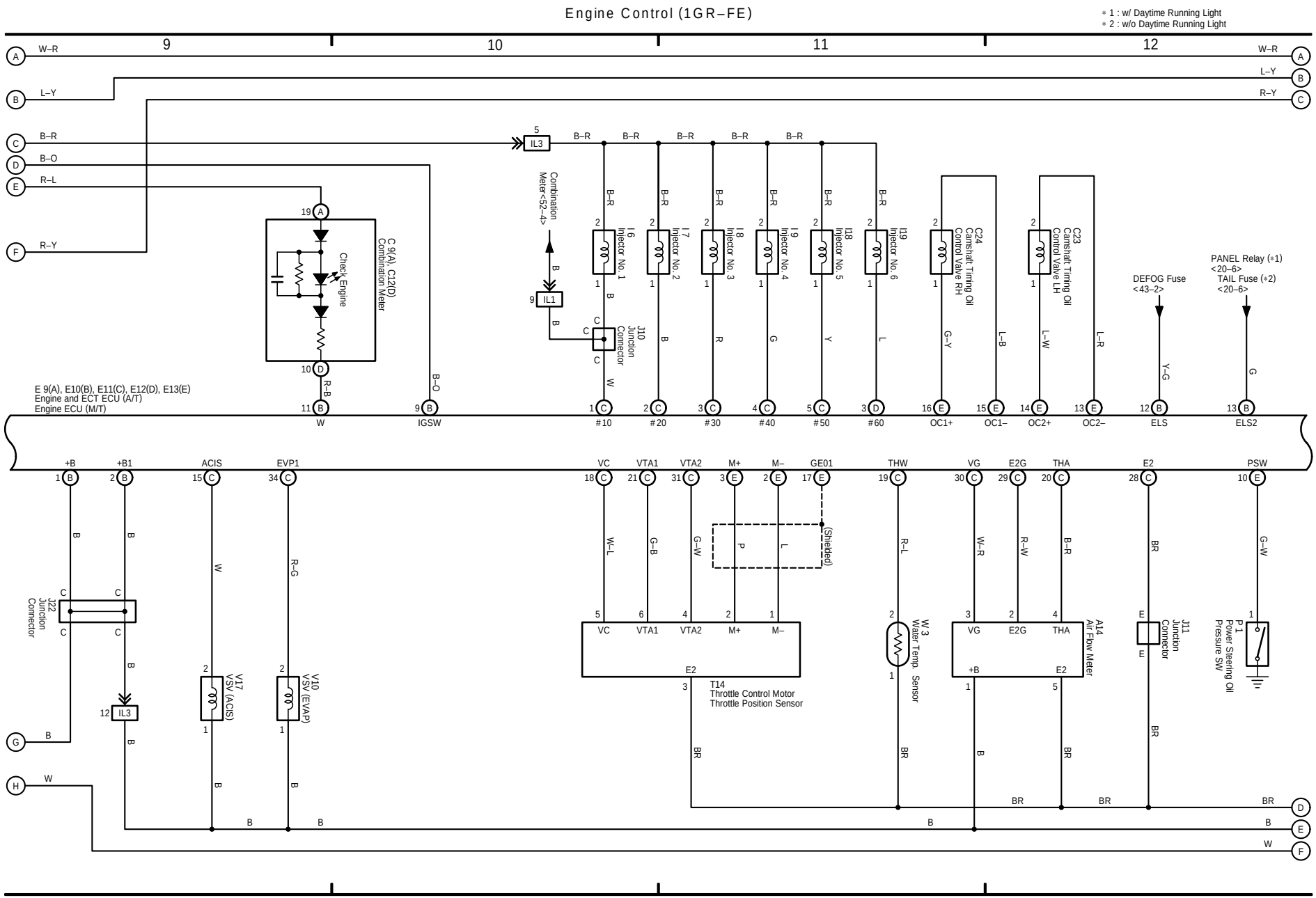

58 LAND CRUISER / LAND CRUISER PRADO (Cont' d)

(Cont. next page)

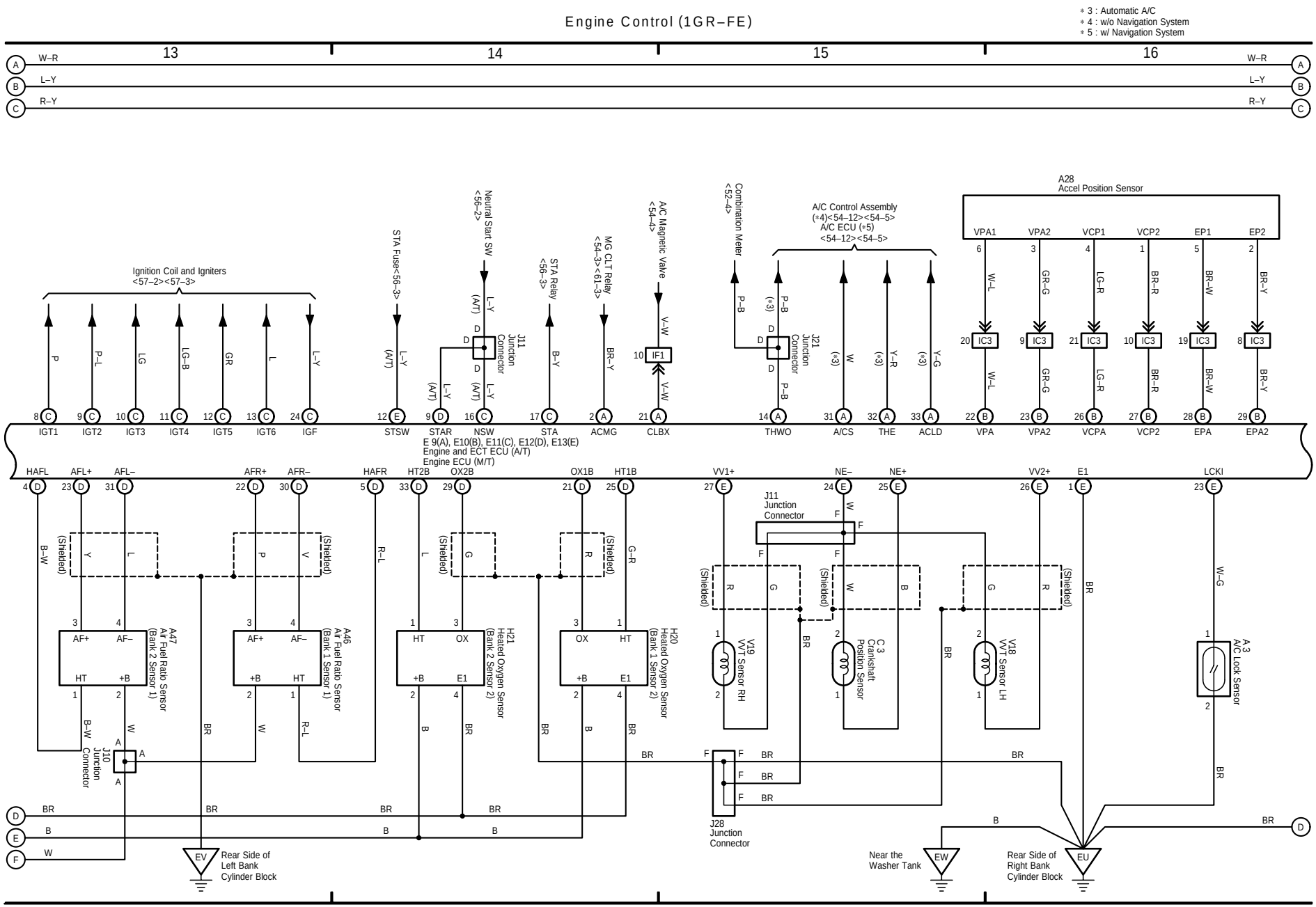

58 LAND CRUISER / LAND CRUISER PRADO (Cont' d)

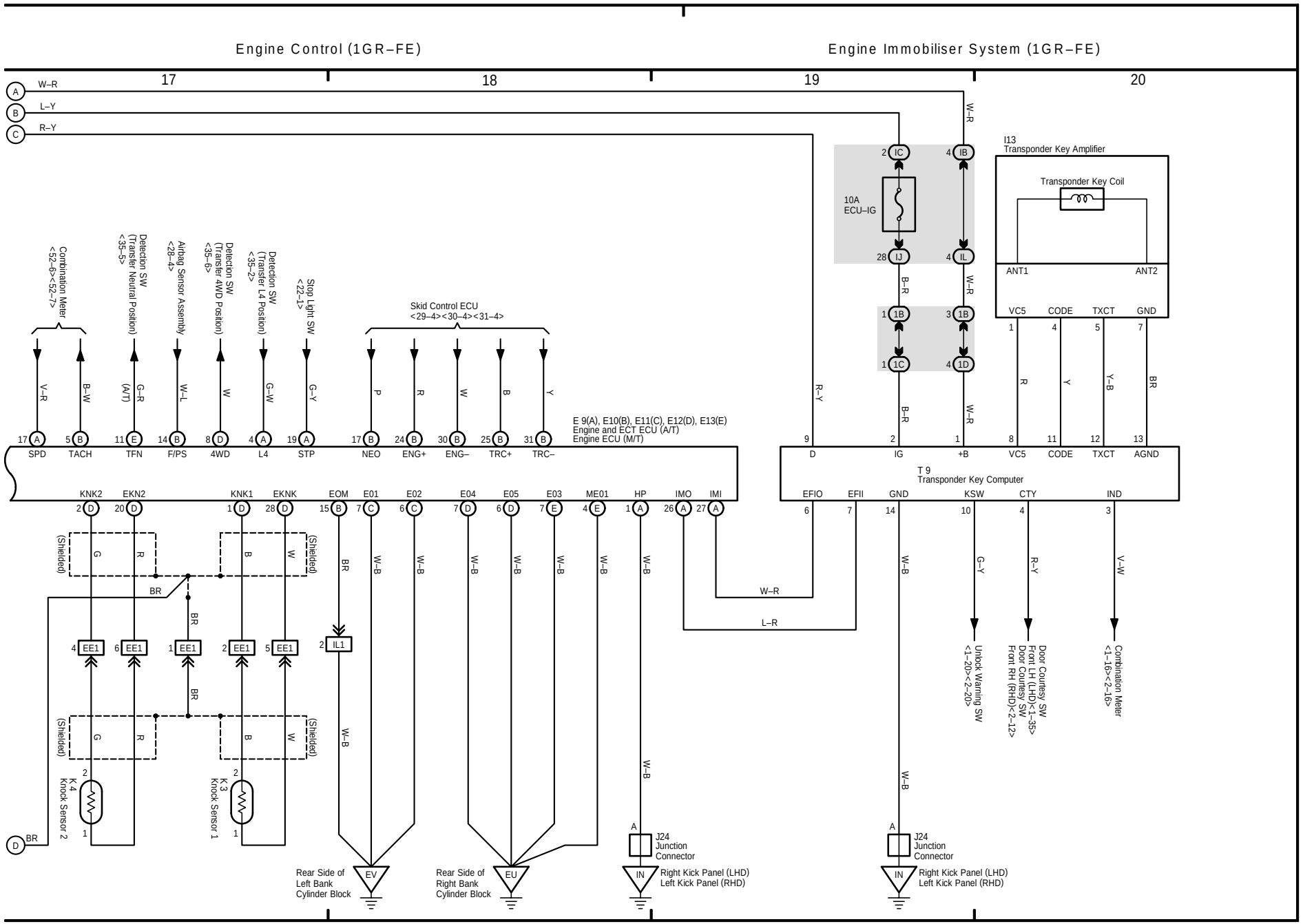

59 LAND CRUISER / LAND CRUISER PRADO

(Cont. next page)

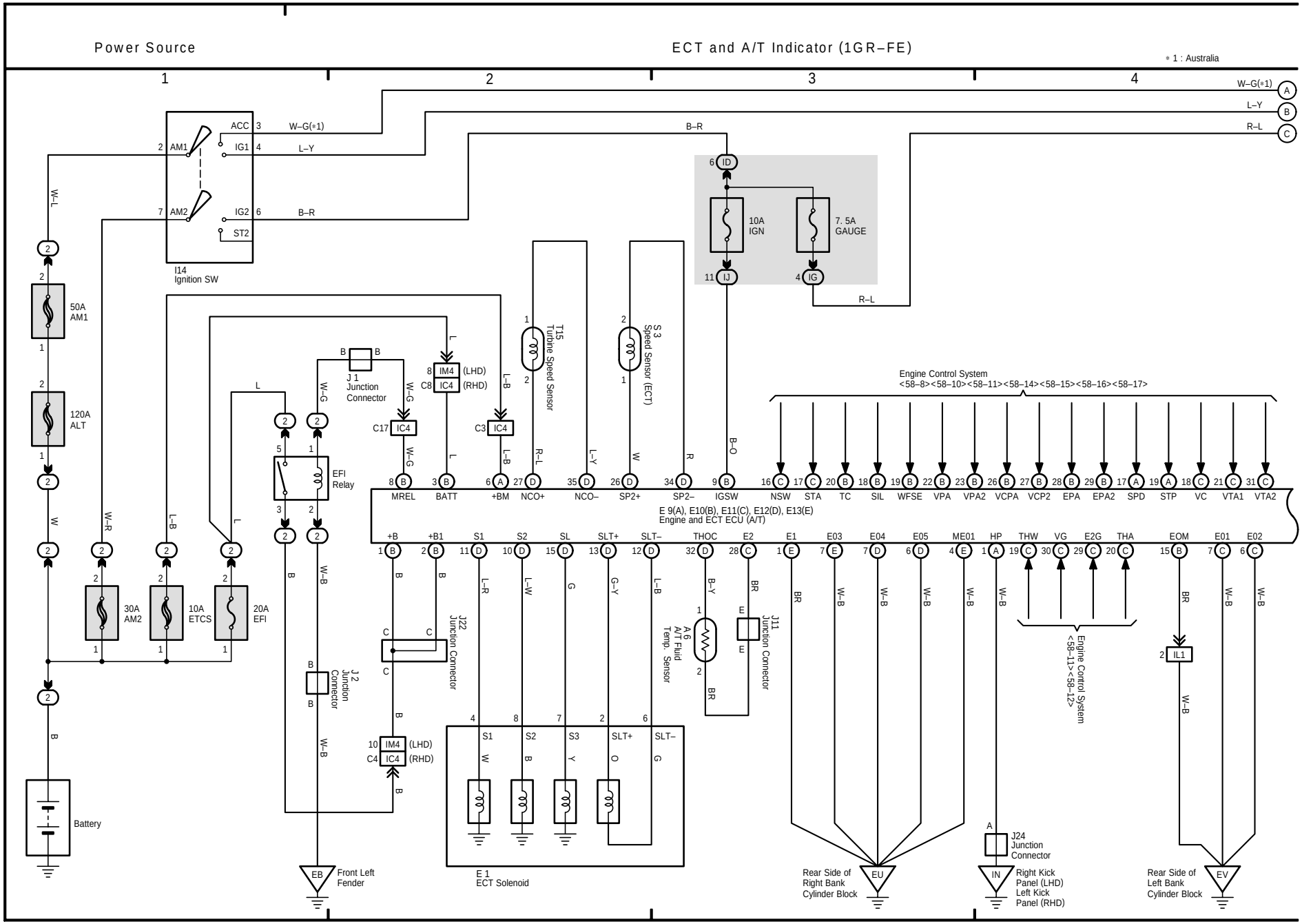

(Cont. next page)

ECT and A/T Indicator (1GR–FE)

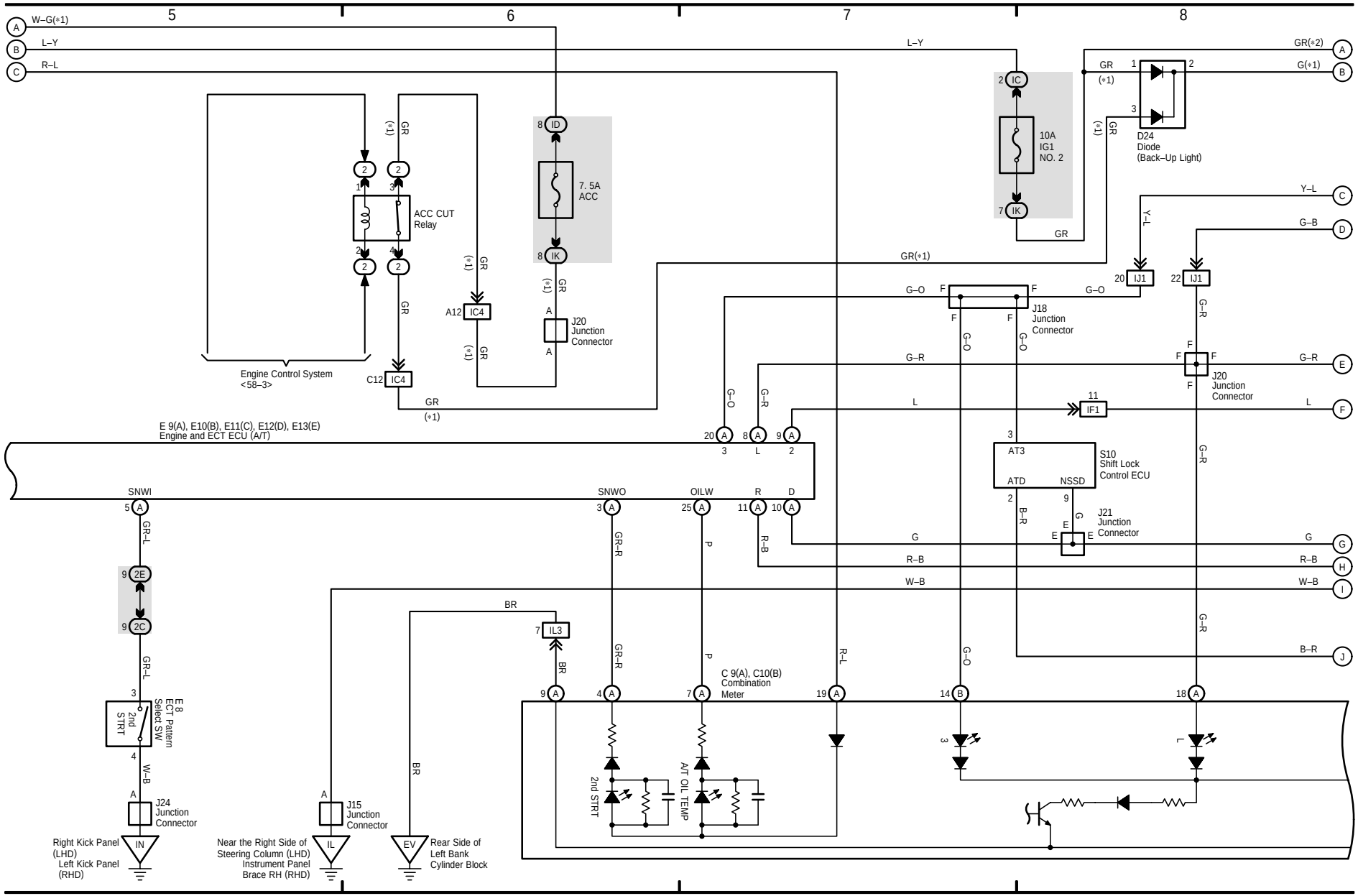

59 LAND CRUISER / LAND CRUISER PRADO (Cont' d)

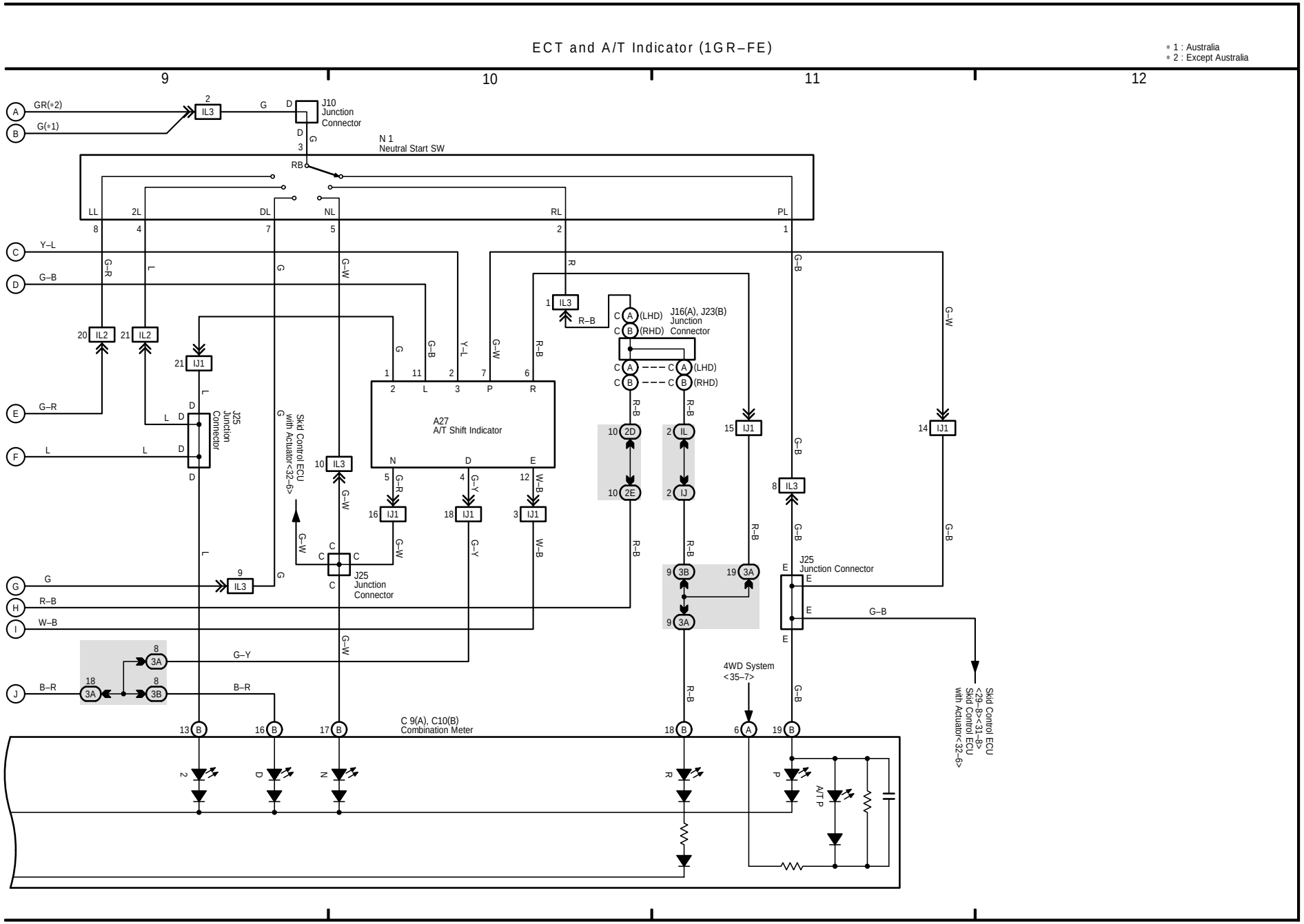

60 LAND CRUISER / LAND CRUISER PRADO

(Cont. next page)

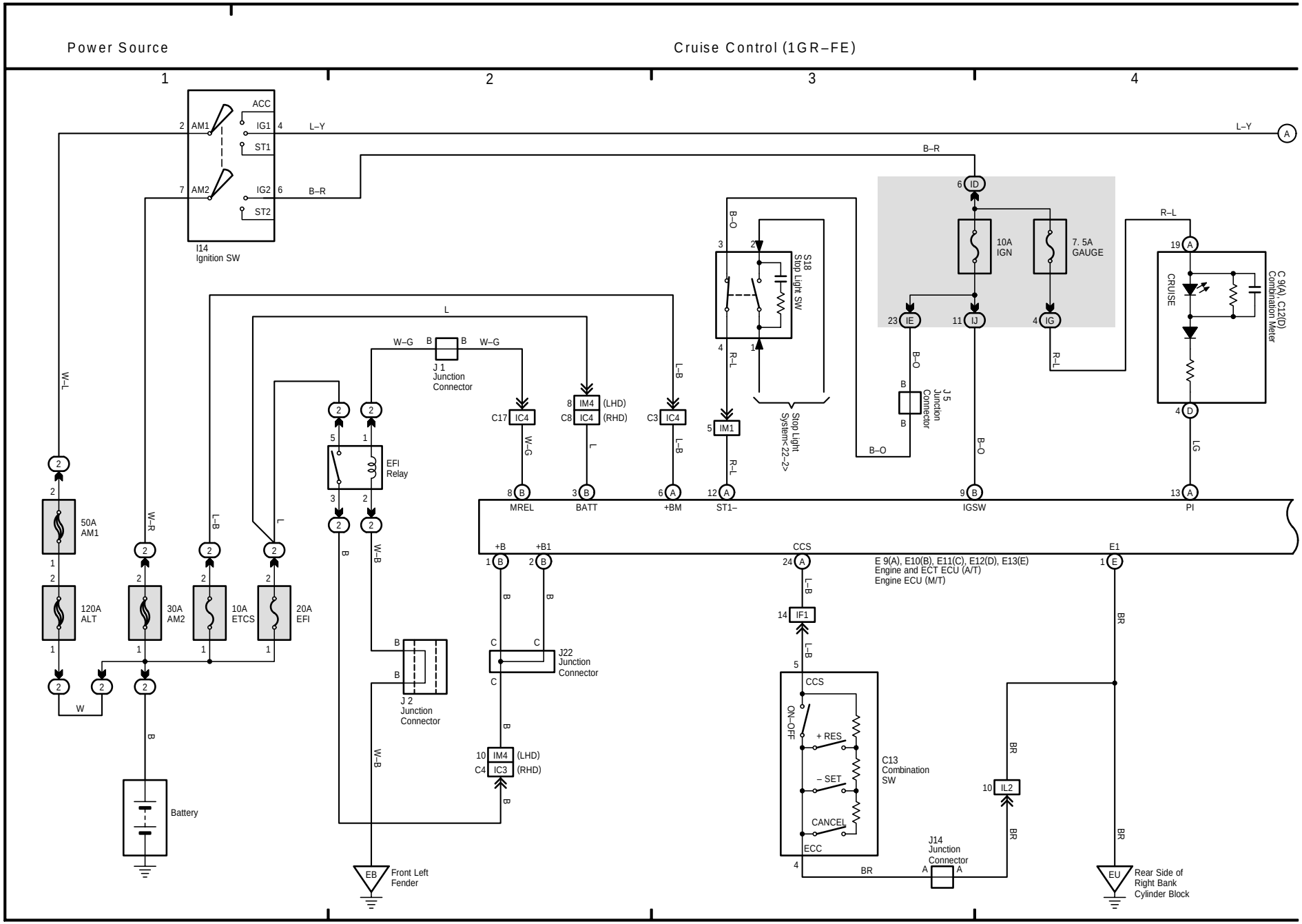

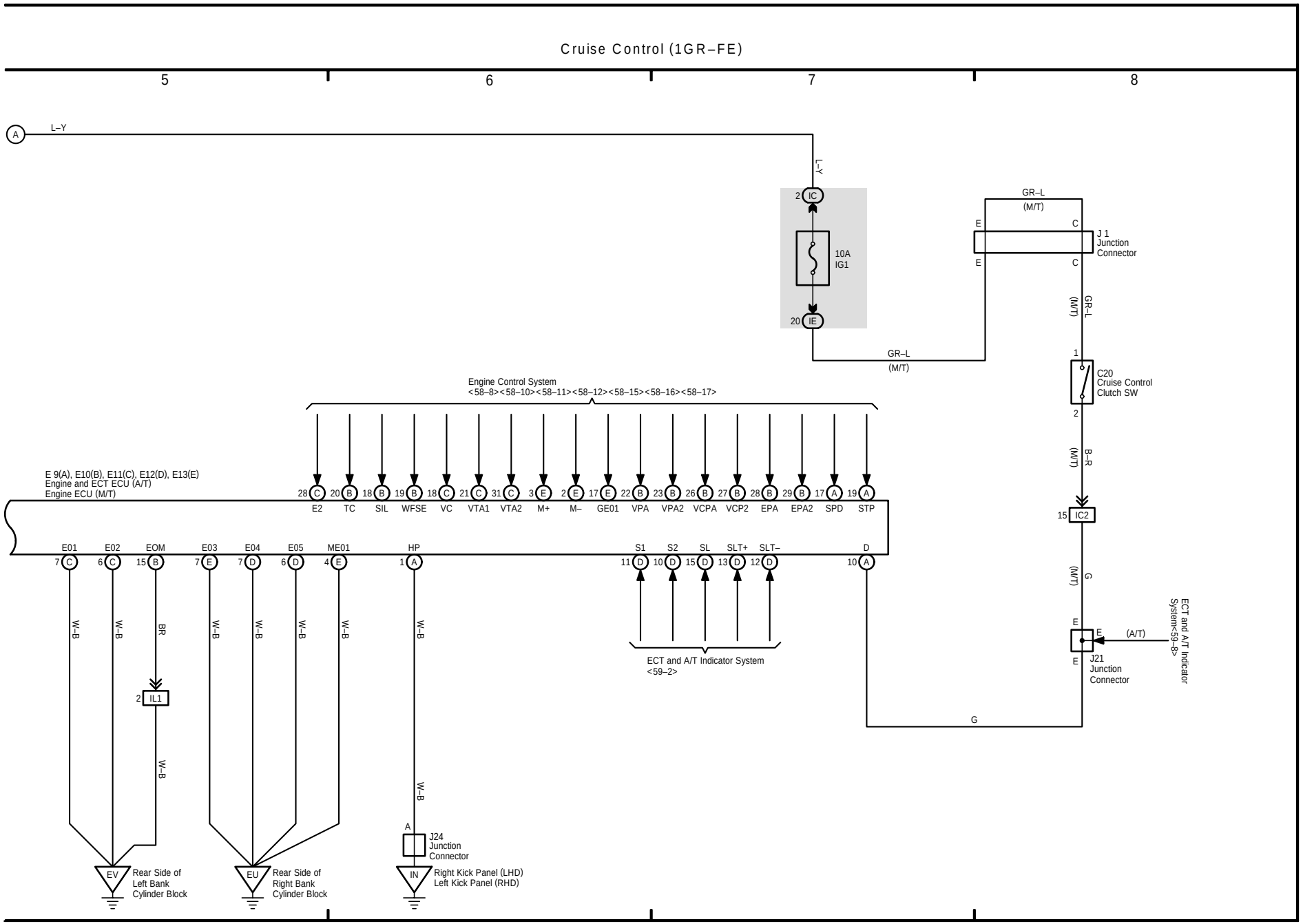
Cruise Control (1GR–FE)
5
6
7
8
A
L–Y
2 IC
10A
IG1
20 IE
GR–L
(M/T)
E
C
J 1
Junction
Connector
GR–L
(M/T)
1
C20
Cruise Control
Clutch SW
2
B–R
(M/T)
15 IC2
G
(M/T)
E
(A/T)
J21
Junction
Connector
ECT and A/T Indicator
System<59–8>
G
Engine Control System
<58–8><58–10><58–11><58–12><58–15><58–16><58–17>
E 9(A), E10(B), E11(C), E12(D), E13(E)
Engine and ECT ECU (A/T)
Engine ECU (M/T)
28 C E2
20 B TC
18 B SIL
19 B WFSE
18 C VC
21 C VTA1
31 C VTA2
3 E M+
2 E M–
17 E GE01
22 B VPA
23 B VPA2
26 B VCPA
27 B VCP2
28 B EPA
29 B EPA2
17 A SPD
19 A STP
E01 7 C
E02 6 C
EOM 15 B
E03 7 E
E04 7 D
E05 6 D
ME01 4 E
HP 1 A
S1 11 D
S2 10 D
SL 15 D
SLT+ 13 D
SLT– 12 D
D 10 A
W–B
W–B
BR
W–B
W–B
W–B
W–B
W–B
W–B
2 IL1
ECT and A/T Indicator System
<59–2>
A
J24
Junction
Connector
EV
Rear Side of
Left Bank
Cylinder Block
EU
Rear Side of
Right Bank
Cylinder Block
IN
Right Kick Panel (LHD)
Left Kick Panel (RHD)

61 LAND CRUISER / LAND CRUISER PRADO

(Cont. next page)

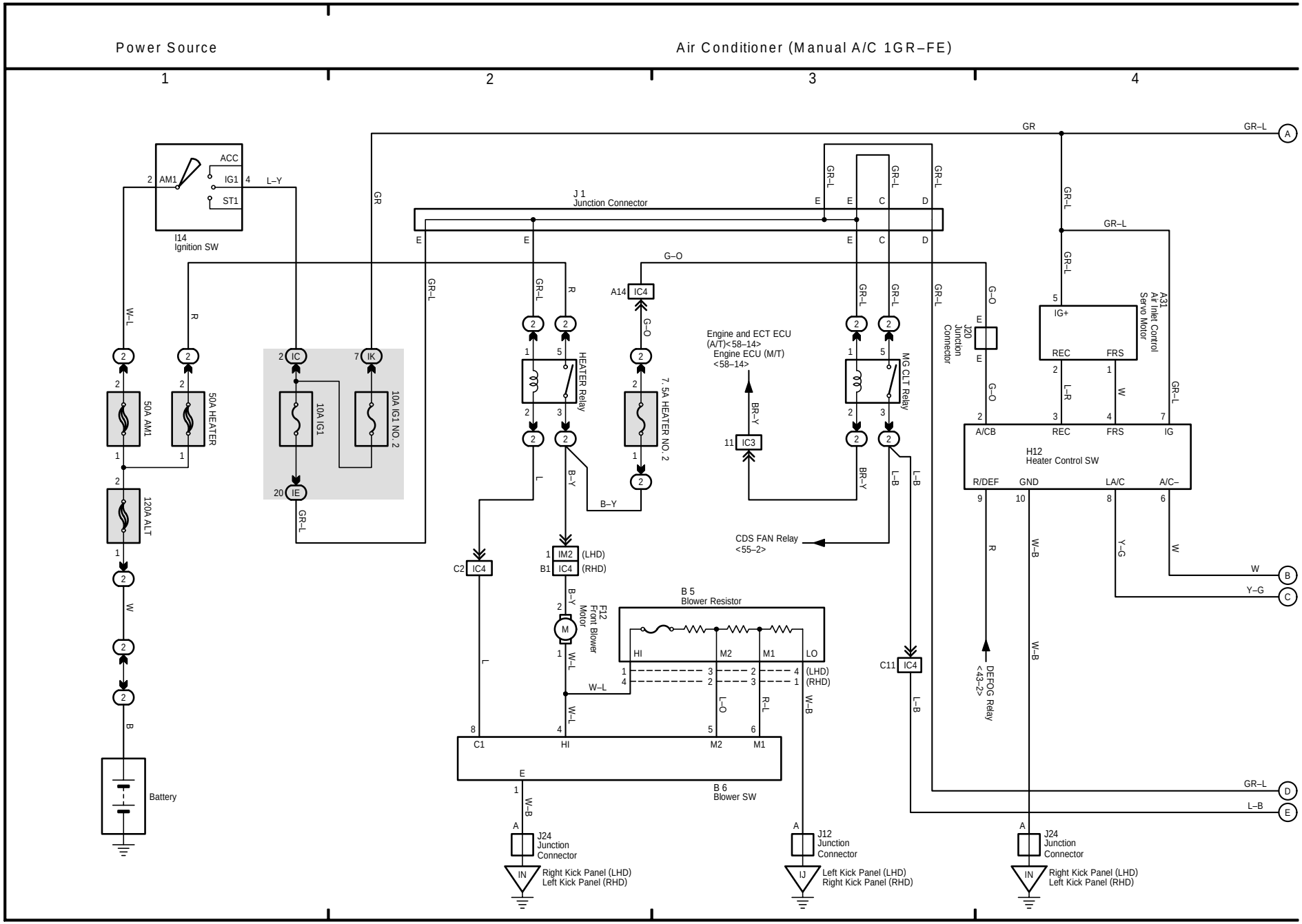
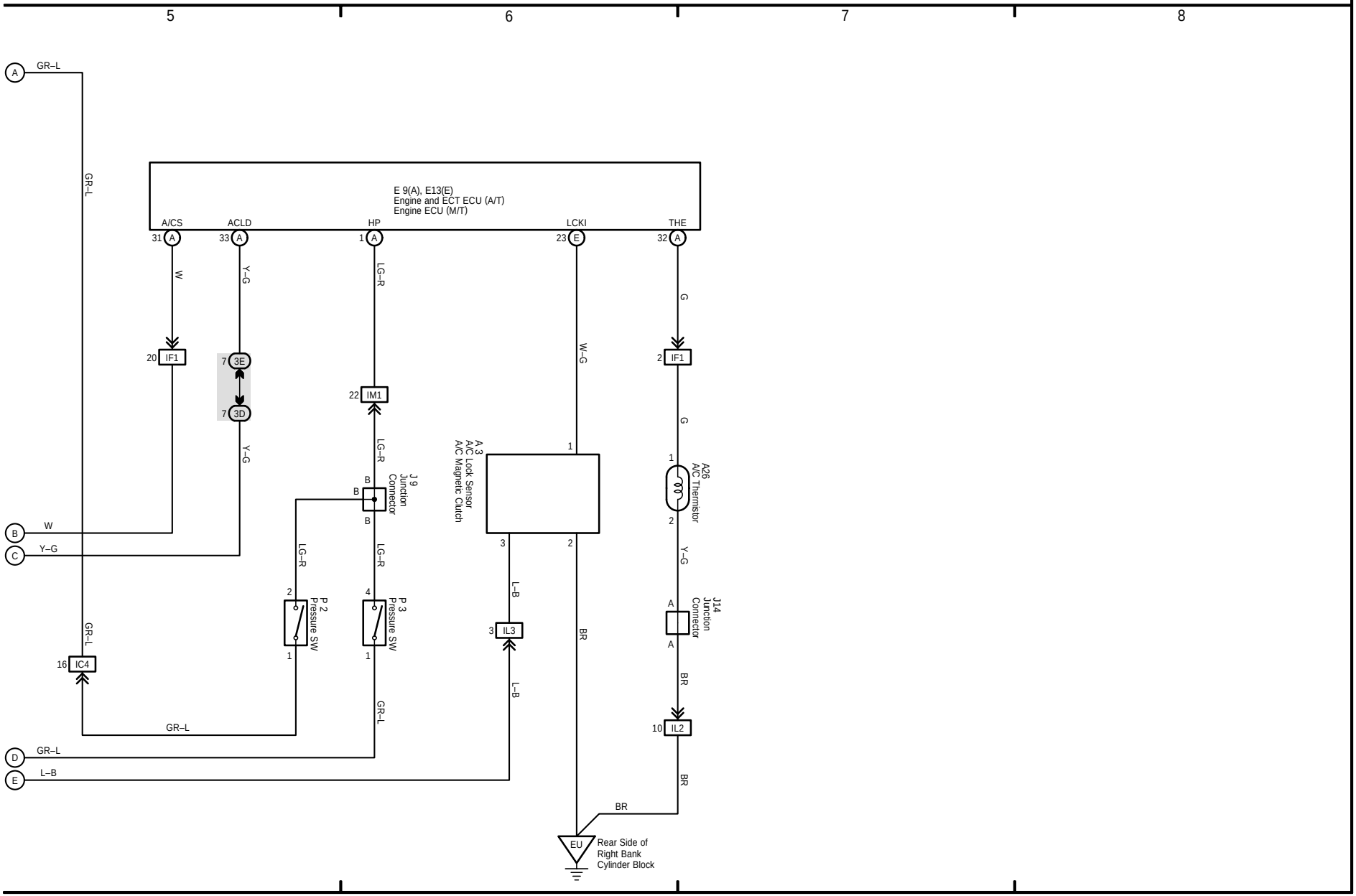
Air Conditioner (Manual A/C 1GR–FE)